Farnsworth GROUP

100% CONSTRUCTION DOCUMENT SET

NOT FOR CONSTRUCTION

CITY OF THORNTON

Cherry Park Irrigation Rehabilitation

Project 22-46B

11500 Birch Drive, Thornton, CO 80233

DEVELOPMENT CONTACTS

CLIENT
CITY OF THORNTON
OPEN SPACE & PROJECT MANAGEMENT
9500 CIVIC CENTER DRIVE
THORNTON, CO 80229
303-255-7834
KELLY.ZUNIGA@THORNTONCO.GOV
CONTACT: KELLY ZUNIGA, PROJECT MANAGER

LANDSCAPE ARCHITECT / CERTIFIED IRRIGATION DESIGNER/AUDITOR
FARNSWORTH GROUP
5613 DTC PARKWAY, SUITE 1100
GREENWOOD VILLAGE, COLORADO 80111
PHONE: (303) 692-8838
JWILSON@F-W.COM; JSPENCER@F-W.COM
CONTACT: JOSEPH L. WILSON, PLA, CID, CLIA, WWLP, QWEL
JON SPENCER, PLA

CIVIL ENGINEER
FARNSWORTH GROUP
5613 DTC PARKWAY, SUITE 1100
GREENWOOD VILLAGE, COLORADO 80111
PHONE: (303) 692-8838
JNEWELL@F-W.COM
CONTACT: JAY NEWELL, PE

SURVEYOR
FARNSWORTH GROUP
223 WILLOW STREET
FORT COLLINS, CO 80524
PHONE: (970) 484-7477
JMCGEHEE@F-W.COM
CONTACT: J.R. MCGEHEE, PLS

ELECTRICAL ENGINEER
PRIMERA ENGINEERS
7822 S. WHEELING COURT, SUITE B
ENGLEWOOD, CO 80112
PHONE: (303) 309-6953
TEVERT@PRIMERAENG.COM
CONTACT: MR. THOM EVERT

LOCATION MAP

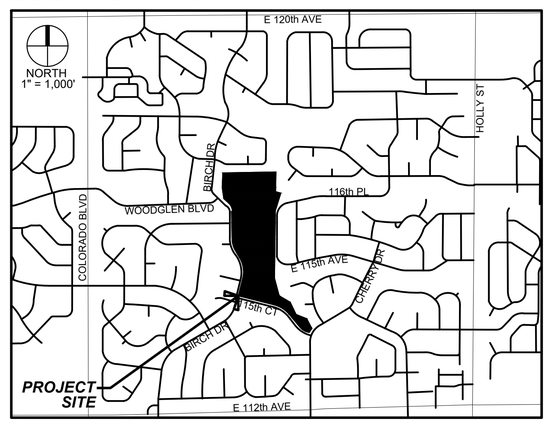

CITY OF THORNTON

KELLY ZUNIGA (PROJECT MANAGER) DATE

BOB KEES DATE
(DEPUTY DIRECTOR - PARKS, RECREATION, AND COMMUNITY PROGRAMS)

INDEX OF DRAWINGS

GENERAL
- G0.1 COVER SHEET
- G0.2 GENERAL CONSTRUCTION NOTES

IRRIGATION
- IR1.0 OVERALL IRRIGATION PLAN
- IR1.1 IRRIGATION PLAN
- IR1.2 IRRIGATION PLAN
- IR1.3 IRRIGATION PLAN
- IR1.4 IRRIGATION PLAN
- IR1.5 IRRIGATION PLAN
- IR2.1 IRRIGATION LEGEND AND NOTES
- IR2.2 IRRIGATION DESIGN CALCULATIONS
- IR2.3 IRRIGATION DETAILS
- IR2.4 IRRIGATION DETAILS
- IR2.5 IRRIGATION DETAILS

CIVIL
- C4.00 EROSION CONTROL COVER
- C4.01 EROSION CONTROL GENERAL NOTES
- C4.11 EROSION CONTROL INITIAL
- C4.12 EROSION CONTROL INITIAL
- C4.13 EROSION CONTROL INITIAL
- C4.14 EROSION CONTROL INITIAL
- C4.15 EROSION CONTROL INITIAL
- C4.21 EROSION CONTROL INTERIM
- C4.22 EROSION CONTROL INTERIM
- C4.23 EROSION CONTROL INTERIM
- C4.24 EROSION CONTROL INTERIM
- C4.25 EROSION CONTROL INTERIM
- C4.91 EROSION CONTROL DETAILS
- C4.92 EROSION CONTROL DETAILS

ELECTRICAL
- E0.0 GENERAL NOTES AND SYMBOLS LEGEND
- E1.0 SITE POWER PLAN

PROJECT NO.: 0231420.00

DATE: 02/18/2026

Farnsworth GROUP
100% CONSTRUCTION DOCUMENT SET
CHERRY PARK IRRIGATION REHABILITATION
CITY OF THORNTON

| gjreen | J:\2023\0231420.00 – Cherry Park Irrigation Rehabilitation\04_drawings\DWG\03_Cover – 0231420.00.dwg | 1/13/2026 7:11 PM |

GENERAL CONSTRUCTION NOTES

1. ALL MATERIALS, WORKMANSHIP, AND CONSTRUCTION OF IMPROVEMENTS SHALL MEET OR EXCEED THE GOVERNING CITY, COUNTY AND/OR STATE AND APPLICABLE UTILITY DISTRICT STANDARDS AND SPECIFICATIONS, AND APPLICABLE STATE AND FEDERAL REGULATIONS. WHERE THERE IS CONFLICT BETWEEN THESE PLANS AND ANY APPLICABLE STANDARDS, THE HIGHER QUALITY STANDARD SHALL APPLY. ALL WORK SHALL BE INSPECTED AND APPROVED BY THE CITY AND APPLICABLE UTILITY DISTRICT(S).

2. THE CONTRACTOR SHALL HAVE ONE (1) SIGNED COPY OF THE APPROVED PLANS, ONE (1) COPY OF THE APPROPRIATE STANDARDS AND SPECIFICATIONS, AND A COPY OF ANY PERMITS AND EXTENSION AGREEMENTS NEEDED FOR THE JOB ON SITE AT ALL TIMES.

3. ALL REFERENCES TO ANY PUBLISHED STANDARDS SHALL REFER TO THE LATEST REVISION OF SAID STANDARDS, UNLESS SPECIFICALLY STATED OTHERWISE.

4. THE CONTRACTOR IS RESPONSIBLE FOR PROVIDING ALL LABOR AND MATERIALS NECESSARY FOR THE COMPLETION OF THE INTENDED IMPROVEMENTS SHOWN ON THESE DRAWINGS OR DESIGNATED TO BE PROVIDED, INSTALLED, CONSTRUCTED, REMOVED, AND RELOCATED UNLESS SPECIFICALLY NOTED OTHERWISE.

5. THE GENERAL CONTRACTOR SHALL BE RESPONSIBLE FOR RECEIVING, UNLOADING, STORING, AND UNCRATING ALL EQUIPMENT FURNISHED BY CITY OF THORNTON AND DELIVERED TO THE SITE.

6. THE CONTRACTOR IS SPECIFICALLY CAUTIONED THAT THE LOCATION AND/OR ELEVATION OF EXISTING UTILITIES, AS SHOWN ON THESE PLANS, IS BASED ON RECORDS OF THE VARIOUS UTILITY COMPANIES AND, WHERE POSSIBLE, MEASUREMENTS TAKEN IN THE FIELD. THE INFORMATION IS NOT TO BE RELIED UPON AS BEING EXACT OR COMPLETE. THE CONTRACTOR MUST CALL THE LOCAL UTILITY LOCATION CENTER AT LEAST 48 HOURS BEFORE ANY EXCAVATION TO REQUEST EXACT FIELD LOCATIONS OF THE UTILITIES. PRIOR TO CONSTRUCTION THE CONTRACTOR SHALL VERIFY PERTINENT LOCATIONS AND ELEVATIONS, ESPECIALLY AT THE CONNECTION POINTS AND AT POTENTIAL UTILITY CONFLICTS. IT SHALL BE THE RESPONSIBILITY OF THE CONTRACTOR TO RELOCATE ALL EXISTING UTILITIES THAT CONFLICT WITH THE PROPOSED IMPROVEMENTS SHOWN ON THESE PLANS.

7. THE CONTRACTOR SHALL COORDINATE AND COOPERATE WITH THE GOVERNING CITY, COUNTY, AND/OR STATE AND ALL UTILITY COMPANIES/DISTRICTS INVOLVED WITH REGARD TO RELOCATIONS OR ADJUSTMENTS OF EXISTING UTILITIES DURING CONSTRUCTION AND TO ASSURE THAT THE WORK IS ACCOMPLISHED IN A TIMELY FASHION AND WITH A MINIMUM DISRUPTION OF SERVICE. THE CONTRACTOR SHALL BE RESPONSIBLE FOR CONTACTING ALL PARTIES AFFECTED BY ANY DISRUPTION OF ANY UTILITY SERVICE.

8. IT IS THE RESPONSIBILITY OF THE CONTRACTOR TO COORDINATE ALL UTILITY RELOCATIONS, WHETHER SHOWN OR NOT SHOWN ON THE PLANS.

9. IT IS THE RESPONSIBILITY OF THE CONTRACTOR TO COORDINATE WITH UTILITY COMPANIES/DISTRICTS TO OBTAIN TEMPORARY POWER, TELEPHONE AND WATER SERVICE DURING CONSTRUCTION. ALL COST FOR TEMPORARY SERVICES SHALL BE THE CONTRACTOR'S RESPONSIBILITY.

10. THE CONTRACTOR SHALL BE RESPONSIBLE FOR OBTAINING ALL NECESSARY PERMITS AND LICENSES FOR WORK INCLUDING, BUT NOT LIMITED TO DEMOLITION, STREET CUTS, UTILITY INTERFERENCES, TRAFFIC CONTROL, GRADING, AND UTILITY FROM ALL APPLICABLE AGENCIES; AND FOR COMPLYING WITH ALL PROVISIONS INCLUDED THEREIN.

11. THE CONTRACTOR SHALL BE RESPONSIBLE FOR ALL ASPECTS OF PROJECT SAFETY INCLUDING, BUT NOT LIMITED TO, EXCAVATION, TRENCHING, SHORING, TRAFFIC CONTROL, AND SECURITY.

12. UTILITY TRENCHES ARE TO BE SLOPED OR BRACED AND SHEETED AS NECESSARY TO FURNISH SAFE WORKING CONDITIONS FOR THE WORKMEN AND THE PROTECTION OF OTHER UTILITIES IN COMPLIANCE WITH APPLICABLE LOCAL, STATE, AND FEDERAL HEALTH AND SAFETY RULES AND REGULATIONS.

13. THE CONTRACTOR SHALL SUBMIT A TRAFFIC CONTROL PLAN, IN ACCORDANCE WITH THE M.U.T.C.D. TO THE APPROPRIATE RIGHT-OF-WAY AUTHORITY (CITY, COUNTY, OR STATE) FOR APPROVAL, PRIOR TO ANY CONSTRUCTION ACTIVITIES WITHIN, OR AFFECTING, THE RIGHT-OF-WAY. THE CONTRACTOR SHALL BE RESPONSIBLE FOR PROVIDING ANY AND ALL TRAFFIC CONTROL DEVICES AS MAY BE REQUIRED BY THE CONSTRUCTION ACTIVITIES.

14. THE CONTRACTOR SHALL BE RESPONSIBLE FOR COORDINATING ALL WORK, INSPECTIONS, AND CERTIFICATIONS AS REQUIRED BY THE CITY, STATE, OR LOCAL DISTRICTS. ALL NECESSARY INSPECTIONS AND/OR CERTIFICATIONS REQUIRED SHALL BE PERFORMED PRIOR TO ANNOUNCED BUILDING POSSESSION AND THE FINAL CONNECTION OF SERVICES. THE CONTRACTOR SHALL BE RESPONSIBLE FOR ALL COST ASSOCIATED WITH INSPECTION AND CERTIFICATION UNLESS OTHERWISE ARRANGED WITH CITY OF THORNTON; AND SHALL COORDINATE ALL CERTIFICATIONS, AND PROVIDE FIELD SURVEYED AS-BUILT INFORMATION FOR REVIEW BY CITY OF THORNTON AND/OR ENGINEER AS EARLY AS POSSIBLE IN THE CONSTRUCTION SCHEDULE TO AVOID POTENTIAL DELAYS.

15. THE CONTRACTOR IS REQUIRED TO ATTEND A PRE-CONSTRUCTION MEETING W/ OWNER PRIOR TO THE START OF ANY CONSTRUCTION ACTIVITY.

16. THE CONTRACTOR SHALL NOTIFY THE GOVERNING CITY, COUNTY, AND/OR STATE AND LOCAL UTILITY COMPANIES/DISTRICTS AT LEAST 48 HOURS PRIOR TO THE START OF ANY CONSTRUCTION.

17. THE CONTRACTOR SHALL NOTIFY THE GOVERNING CITY, COUNTY, AND/OR STATE AND LOCAL UTILITY COMPANIES/DISTRICTS AT LEAST 48 HOURS PRIOR TO THE START OF ANY EARTH DISTURBING ACTIVITY.

18. THE CONTRACTOR SHALL BE RESPONSIBLE FOR KEEPING ROADWAYS AND TRAILS FREE AND CLEAR OF ALL CONSTRUCTION DEBRIS AND DIRT TRACKED FROM THE SITE.

19. THE CONTRACTOR SHALL BE RESPONSIBLE FOR THE RESTORATION OF ANY EXISTING IMPROVEMENTS INCLUDING, BUT NOT LIMITED TO STREET PAVEMENT, FENCES, SOD, LANDSCAPING, SPRINKLER SYSTEMS, AND UTILITIES DISTURBED DURING CONSTRUCTION TO THEIR ORIGINAL LOCATION AND CONDITION.

20. INCLUDED IN THIS PACKAGE IS THE DEMOLITION AND DISPOSAL OF ALL EXISTING UTILITIES, SITE IMPROVEMENTS AND SITE FURNISHINGS NEEDED FOR CONSTRUCTION OF THE IMPROVEMENTS SHOWN IN THIS SET OF CONSTRUCTION DRAWINGS. ALL QUESTIONS IN REGARD TO DEMOLITION SHALL BE SUBMITTED TO THE OWNER IN WRITING PRIOR TO BID.

21. ALL DEMOLITION, REMOVAL, DISPOSAL AND ABANDONMENT OF UTILITIES, STRUCTURES, SITE IMPROVEMENTS AND SITE FURNISHINGS SHALL BE DONE IN ACCORDANCE WITH ALL APPLICABLE FEDERAL, STATE AND LOCAL STANDARDS AND SPECIFICATIONS, AND PERMIT REQUIREMENTS.

22. DIMENSIONS FOR LAYOUT AND CONSTRUCTION ARE NOT TO BE SCALED FROM ANY DRAWING. IF PERTINENT DIMENSIONS ARE NOT SHOWN, CONTACT THE OWNER FOR CLARIFICATION, AND ANNOTATE THE DIMENSION ON THE AS-BUILT RECORD DRAWINGS.

23. THE CONTRACTOR SHALL BE RESPONSIBLE FOR RECORDING AS-BUILT INFORMATION ON A SET OF RECORD DRAWINGS KEPT AT THE CONSTRUCTION SITE WHICH SHALL BE AVAILABLE TO THE GOVERNING CITY, COUNTY, AND/OR STATE AND UTILITY DISTRICT INSPECTOR AT ALL TIMES.

24. AS-BUILT PLANS (INCLUDING DECODER ADDRESS, IDENTIFIED WIRE PATHS IN BOX SPLICED 'STAR' PATTERN, AND MAPPED SYSTEM ON BASELINE BASE MANAGER) AND FIELD NOTES SHALL BE PROVIDED BY THE CONTRACTOR TO THE CITY, COUNTY, STATE, FEDERAL OR UTILITY DISTRICT; OR TO CITY OF THORNTON AS REQUIRED BY AND IN ACCORDANCE WITH THE GOVERNING AUTHORITY'S OR OWNER/DEVELOPER'S CRITERIA. THE CONTRACTOR SHALL CONFIRM ANY REQUIREMENTS AS EARLY AS POSSIBLE IN THE CONSTRUCTION SCHEDULE TO ACCOUNT FOR PREPARATION AND REVIEW OF THE INFORMATION TO AVOID POTENTIAL DELAYS.

25. NO REVISIONS SHALL BE MADE TO THESE PLANS WITHOUT THE APPROVAL OF CITY OF THORNTON.

26. IF, DURING THE CONSTRUCTION PROCESS, CONDITIONS ARE ENCOUNTERED BY THE CONTRACTOR, HIS SUBCONTRACTORS, OR OTHER AFFECTED PARTIES, WHICH COULD INDICATE A SITUATION THAT IS NOT IDENTIFIED IN THE PLANS OR SPECIFICATIONS, THE CONTRACTOR SHALL CONTACT THE PROJECT MANAGER FOR CITY OF THORNTON IMMEDIATELY.

27. ANY TO ALL WORK WITHIN THE PUBLIC RIGHT-OF-WAY SHALL BE DONE IN ACCORDANCE WITH THE GOVERNING AUTHORITY'S STANDARDS AND SPECIFICATIONS.

28. ALL PROTECTIVE SAFETY DEVICES TO BE INSTALLED BY THE CONTRACTOR, SHALL BE IN PLACE AT THE END OF EACH WORK DAY.

29. CONTRACTOR SHALL REFER TO MATERIALS SPECIFICATIONS THROUGHOUT THE APPROVED PLAN SET. ANY SUBSTITUTIONS OF THE MATERIALS SPECIFIED IN THESE DRAWINGS SHALL REQUIRE WRITTEN APPROVAL FROM CITY OF THORNTON.

30. CITY OF THORNTON GIS DEPARTMENT PROVIDED BUILDING, PROPERTY BOUNDARIES, AND TOPOGRAPHIC CAD LINE WORK. ALL SITE CAD LINE WORK ADDITIONAL TO THIS ARE BASED ON FIELD VERIFICATION AND MEASUREMENT, AERIAL PHOTOGRAPHY, AND CITY PROVIDED HARDCOPY PLANS.

DEMOLITION GENERAL NOTES

1. CONTRACTOR SHALL COMPLY WITH THESE NOTES AND THE CITY OF THORNTON'S STANDARDS STANDARDS AND SPECIFICATIONS. CITY STANDARDS SHALL TAKE PRECEDENCE OVER THE NOTES BELOW.

2. ALL DEMOLITION, REMOVAL, DISPOSAL AND ABANDONMENT OF UTILITIES, STRUCTURES, SITE IMPROVEMENTS AND SITE FURNISHINGS SHALL BE IN ACCORDANCE WITH ALL LOCAL, STATE, AND FEDERAL REQUIREMENTS.

3. PHASED AREAS OF PARK NOT UNDER CONSTRUCTION, PER THE PHASING PLAN, TO REMAIN OPEN TO THE PUBLIC EXCEPT PER PHASING TO WATER PARK AREA DURING CONSTRUCTION. EXISTING MAINLINE & LATERALS TO BE ABANDONED IN PLACE.

4. WHERE NECESSARY, STUB UNDERGROUND INFRASTRUCTURE TO BE REMOVED A MINIMUM 18" BELOW GRADE.

5. REMOVE ALL EXISTING GATE OR CONTROL VALVES (EXCEPT PHASED WATERING PARK AREA) AND CAP AT SERVICE TEE; CLOSE GATE VALVES, REMOVE BOXES & VERTICAL SLEEVES.

6. ANY SITE CONDITIONS THAT ARE NOT AS SHOWN ON THE DEMOLITION PLAN MUST BE REPORTED TO CITY OF THORNTON PRIOR TO BID.

7. CONTRACTOR SHALL ADD, REMOVE OR RELOCATE EXISTING UTILITIES PER UTILITY COMPANY REQUIREMENTS. CONTRACTOR SHALL COORDINATE REMOVALS AND/OR RELOCATIONS WITH THE APPROPRIATE UTILITY COMPANY AND CITY OF THORNTON PRIOR TO DEMOLITION.

8. THE CONTRACTOR SHALL VERIFY ALL UTILITIES HAVE BEEN DISCONNECTED AS REQUIRED FOR THE WORK.

9. CONTRACTOR SHALL ERECT BARRIERS, FENCES, GUARDRAILS, ENCLOSURES, ETC. TO PROTECT THE SITE. THE PROTECTION PLAN MUST BE REVIEWED BY CITY OF THORNTON PRIOR TO PROCEEDING WITH DEMOLITION.

10. IF APPLICABLE, THE CONTRACTOR SHALL PROVIDE ALL NECESSARY TRAFFIC CONTROL (SIGNS, BARRICADES, FLAGMEN, LIGHTS, ETC) IN ACCORDANCE WITH THE MUTCD, CURRENT EDITION AND THE GOVERNING JURISDICTION'S STANDARDS AND SPECIFICATIONS AS REQUIRED FOR THE WORK.

11. CITY OF THORNTON WILL DETERMINE WHEN CONDITIONS ARE SUITABLE TO COMMENCE WORK. THE CONTRACTOR SHALL VERIFY AREAS TO BE DEMOLISHED ARE UNOCCUPIED AND NOT IN USE PRIOR TO DEMOLITION.

12. CONTRACTOR SHALL DISPOSE OF AND TRANSPORT DEBRIS TO AREA(S) OBTAINED BY CONTRACTOR. CONTRACTOR SHALL NOT STORE OR BURN MATERIALS ON SITE. CONTRACTOR SHALL HANDLE AND DISPOSE OF ALL DEBRIS IN ACCORDANCE WITH ALL LOCAL, STATE, AND FEDERAL REGULATIONS. DISPOSAL SHALL BE TRANSPORTED TO AN APPROVED LANDFILL OR OTHER APPROVED FACILITY.

13. CONTRACTOR SHALL PROTECT ALL EXISTING STRUCTURES, FEATURES, IMPROVEMENTS, AND UTILITIES (OVERHEAD OR UNDERGROUND) AT ALL TIMES DURING DEMOLITION AND CONSTRUCTION. CONTRACTOR WILL BE RESPONSIBLE FOR ALL RESULTANT COSTS DUE TO SUCH DAMAGES.

14. CONTRACTOR SHALL COORDINATE ALL EXISTING EQUIPMENT TO BE REMOVED AND RETAINED FOR CITY OF THORNTON REUSE PRIOR TO DEMOLITION.

Farnsworth GROUP
5613 DTC PARKWAY, SUITE 1100
GREENWOOD VILLAGE, COLORADO 80111
(303) 692-8838 / info@f-w.com

www.f-w.com
Engineers | Architects | Surveyors | Scientists

ISSUE:

#	DATE:	DESCRIPTION:

PREPARED UNDER THE DIRECT SUPERVISION OF JOSEPH L. WILSON, PLA, CID, CLIA, QWEL, WWLP, COLORADO LICENCE REGISTRATION LA-304

PRELIMINARY
NOT FOR CONSTRUCTION
THESE DRAWINGS AND/OR SPECIFICATIONS ARE BEING ISSUED FOR INFORMATION ONLY. THEY ARE NOT INTENDED TO BE USED FOR FINAL PRICING OR FOR CONSTRUCTION. THEY ARE PRELIMINARY IN NATURE AND ARE SUBJECT TO CHANGE PRIOR TO ISSUANCE OF THE PROJECT CONSTRUCTION DOCUMENTS. ANY PRICING ATTAINED BY THE CONTRACTOR VIA THE USE OF THESE DOCUMENTS IS CONSIDERED TO BE AT THE RISK OF THE CONTRACTOR.

PROJECT:

CITY OF THORNTON
9500 CIVIC CENTER DRIVE
THORNTON, COLORADO 80229

CHERRY PARK IRRIGATION REHABILITATION, PROJECT 22-46B

11500 BIRCH DR,
THORNTON, CO
80233

DATE:	07/11/2025
DESIGNED:	JLW
DRAWN:	JLW
REVIEWED:	JLW
FIELD BOOK NO.:	-

SHEET TITLE:

GENERAL CONSTRUCTION NOTES

SHEET NUMBER:

G0.2

PROJECT NO.: 0231420.00

cgreen | J:\2023\0231420.00 _ Cherry Park Irrigation Rehabilitation\04_drawings\DWG\00_Cover _ 0231420.00.dwg | 7/11/2026 2:11 PM |

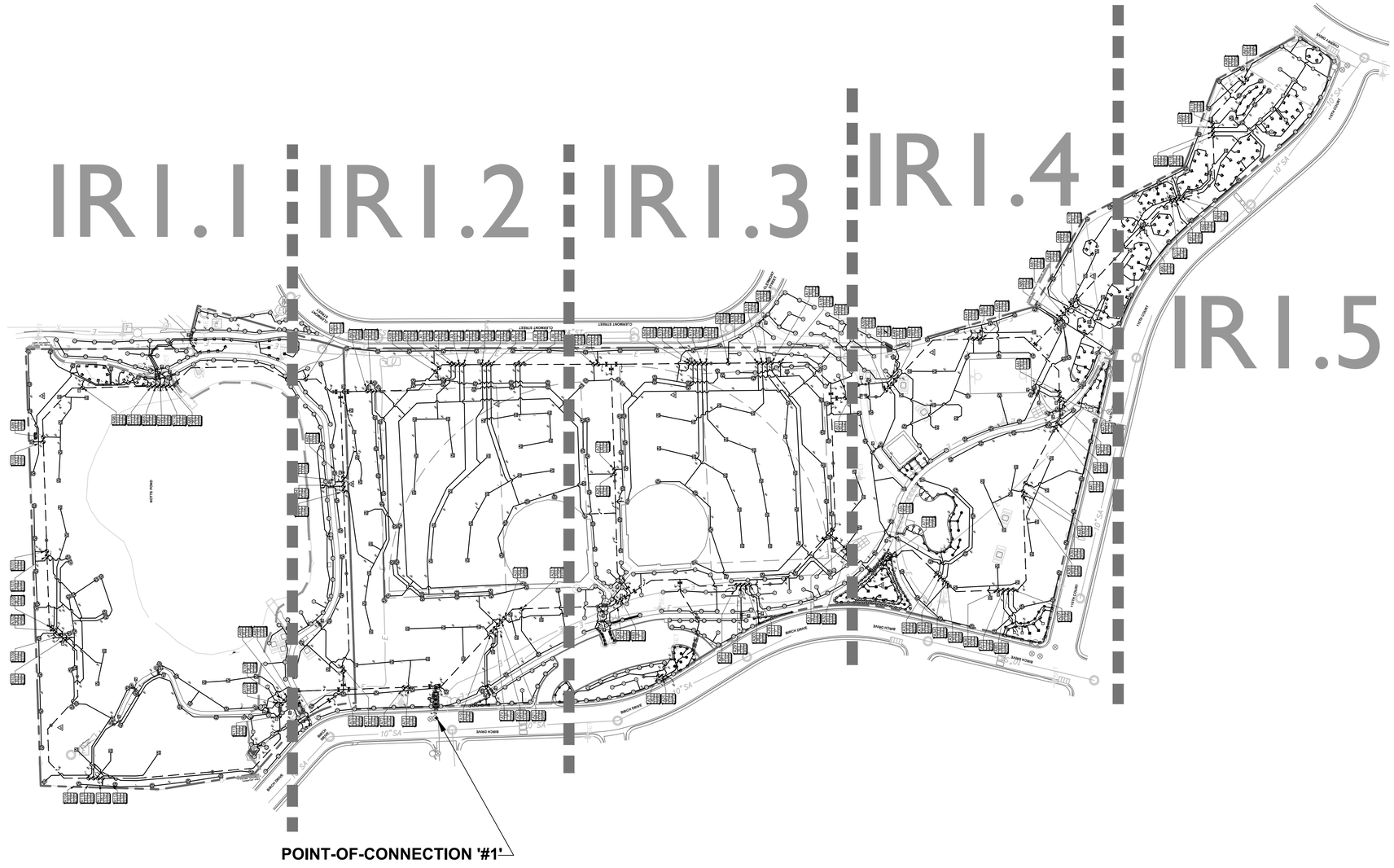

0 OVERALL IRRIGATION PLAN

SCALE: 1"=100'

0 50 100 200
U.S. SURVEY FEET

NORTH

Know what's **below.**
Call before you dig.

CAUTION - NOTICE TO CONTRACTOR

THE CONTRACTOR IS SPECIFICALLY CAUTIONED THAT THE LOCATION AND/OR ELEVATION OF EXISTING UTILITIES AS SHOWN ON THESE PLANS IS BASED ON RECORDS OF THE VARIOUS UTILITY COMPANIES AND, WHERE POSSIBLE, MEASUREMENTS TAKEN IN THE FIELD. THE INFORMATION IS NOT TO BE RELIED ON AS BEING EXACT OR COMPLETE. THE CONTRACTOR MUST CALL THE LOCAL UTILITY LOCATION CENTER AT LEAST 48 HOURS BEFORE ANY EXCAVATION TO REQUEST EXACT FIELD LOCATIONS OF THE UTILITIES. IT SHALL BE THE RESPONSIBILITY OF THE CONTRACTOR TO RELOCATE ALL EXISTING UTILITIES WHICH CONFLICT WITH THE PROPOSED IMPROVEMENTS SHOWN ON THE PLANS.

THE CONTRACTOR SHALL BE RESPONSIBLE FOR ANY DAMAGE TO EXISTING IMPROVEMENTS AND UTILITIES AND SHALL REPAIR ANY DAMAGE AT HIS EXPENSE.

Farnsworth
GROUP

5613 DTC PARKWAY, SUITE 1100
GREENWOOD VILLAGE, COLORADO 80111
(303) 692-8838 / info@f-w.com

www.f-w.com
Engineers | Architects | Surveyors | Scientists

ISSUE:

#	DATE:	DESCRIPTION:

PREPARED UNDER THE DIRECT SUPERVISION OF JOSEPH L. WILSON, PLA, CID, CLIA, QWEL, WWLP, COLORADO LICENCE REGISTRATION LA-304

PRELIMINARY
NOT FOR CONSTRUCTION

THESE DRAWINGS AND/OR SPECIFICATIONS ARE BEING ISSUED FOR INFORMATION ONLY. THEY ARE NOT INTENDED TO BE USED FOR FINAL PRICING OR FOR CONSTRUCTION. THEY ARE PRELIMINARY IN NATURE AND ARE SUBJECT TO CHANGE PRIOR TO ISSUANCE OF THE PROJECT CONSTRUCTION DOCUMENTS. ANY PRICING ATTAINED BY THE CONTRACTOR VIA THE USE OF THESE DOCUMENTS IS CONSIDERED TO BE AT THE RISK OF THE CONTRACTOR.

PROJECT:

CITY OF THORNTON
9500 CIVIC CENTER DRIVE
THORNTON, COLORADO 80229

CHERRY PARK IRRIGATION REHABILITATION, PROJECT 22-46B

11500 BIRCH DR,
THORNTON, CO
80233

DATE:	07/11/2025
DESIGNED:	JLW
DRAWN:	JLW
REVIEWED:	JLW
FIELD BOOK NO.:	-

SHEET TITLE:

OVERALL IRRIGATION PLAN

SHEET NUMBER:

IR1.0

PROJECT NO.: 0231420.00

ggreen | J:\2023\0231420.00 - Cherry Park Irrigation Rehabilitation\04_drawings\IR\IR1_Plan - 0231420.00_20250523.dwg | 7/12/2026 4:03 PM |

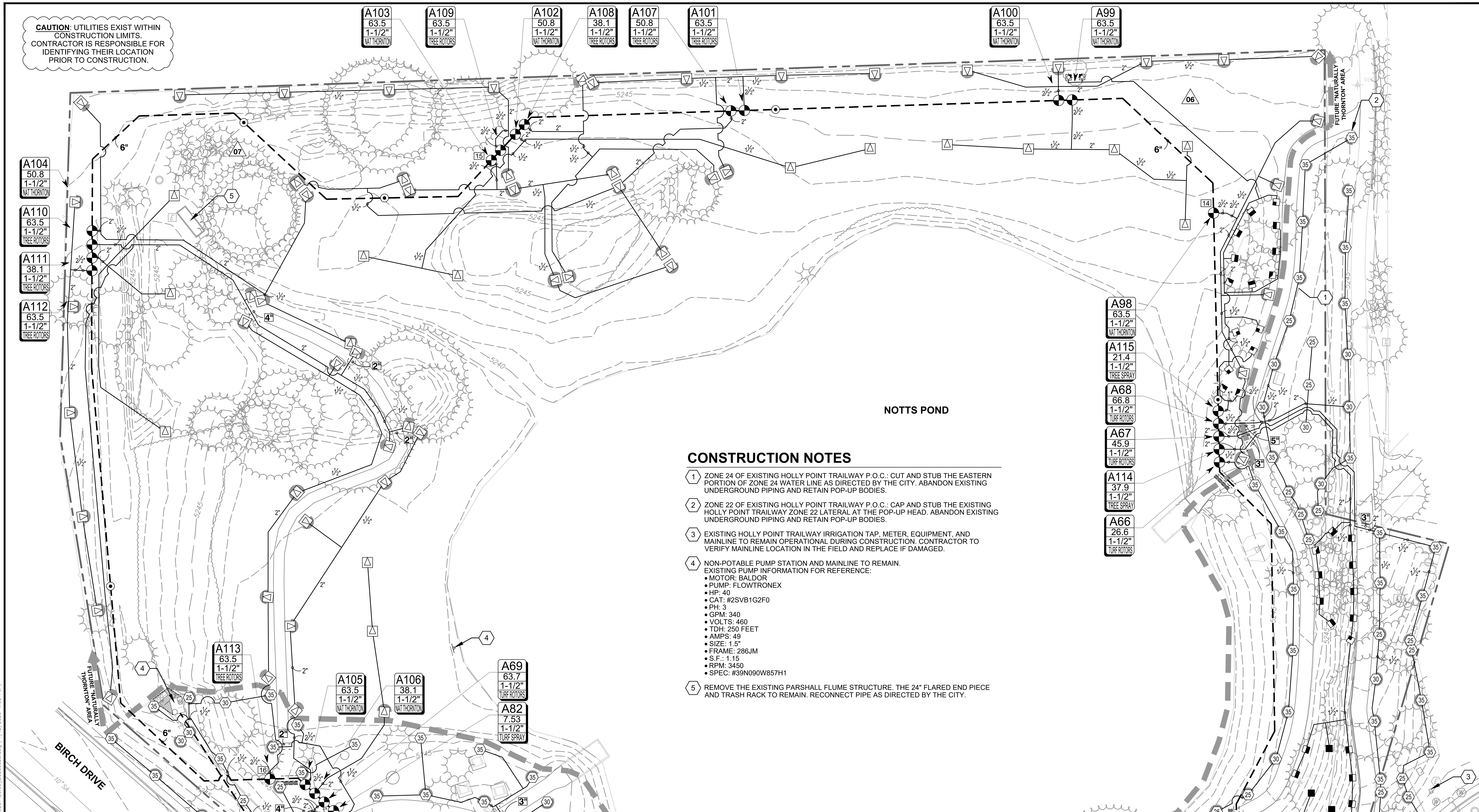

CONSTRUCTION NOTES

1. ZONE 24 OF EXISTING HOLLY POINT TRAILWAY P.O.C.: CUT AND STUB THE EASTERN PORTION OF ZONE 24 WATER LINE AS DIRECTED BY THE CITY. ABANDON EXISTING UNDERGROUND PIPING AND RETAIN POP-UP BODIES.
2. ZONE 22 OF EXISTING HOLLY POINT TRAILWAY P.O.C.: CAP AND STUB THE EXISTING HOLLY POINT TRAILWAY ZONE 22 LATERAL AT THE POP-UP HEAD. ABANDON EXISTING UNDERGROUND PIPING AND RETAIN POP-UP BODIES.
3. EXISTING HOLLY POINT TRAILWAY IRRIGATION TAP, METER, EQUIPMENT, AND MAINLINE TO REMAIN OPERATIONAL DURING CONSTRUCTION. CONTRACTOR TO VERIFY MAINLINE LOCATION IN THE FIELD AND REPLACE IF DAMAGED.
4. NON-POTABLE PUMP STATION AND MAINLINE TO REMAIN. EXISTING PUMP INFORMATION FOR REFERENCE:
   - MOTOR: BALDOR
   - PUMP: FLOWTRONEX
   - HP: 40
   - CAT: #2SVB1G2F0
   - PH: 3
   - GPM: 340
   - VOLTS: 460
   - TDH: 250 FEET
   - AMPS: 49
   - SIZE: 1.5"
   - FRAME: 286JM
   - S.F.: 1.15
   - RPM: 3450
   - SPEC: #39N090W857H1
5. REMOVE THE EXISTING PARSHALL FLUME STRUCTURE. THE 24" FLARED END PIECE AND TRASH RACK TO REMAIN. RECONNECT PIPE AS DIRECTED BY THE CITY.

1 **IRRIGATION PLAN**
SCALE: 1"=30'

IRRIGATION LEGEND

SYMBOL	DESCRIPTION
EST LCS RCS CST SST	RAIN BIRD RD-06-S-P30-F-R-U 15 STRIP SERIES
Q T H F	RAIN BIRD RD-06-S-P30-F-R-U U8 SERIES
Q T H F	RAIN BIRD RD-06-S-P30-F-R-U U10 SERIES
Q T H TT TQ F	RAIN BIRD RD-06-S-P30-F-R-U U12 SERIES
Q T H TT TQ F	RAIN BIRD RD-06-S-P30-F-R-U U15 SERIES
EST LCS RCS CST SST	RAIN BIRD RD-12-S-P30-F-R-U 15 STRIP SERIES
Q T H F	RAIN BIRD RD-12-S-P30-F-R-U U8 SERIES
Q T H TT TQ F	RAIN BIRD RD-12-S-P30-F-R-U U10 SERIES
Q T H TT TQ F	RAIN BIRD RD-12-S-P30-F-R-U U12 SERIES
Q T H TT TQ F	RAIN BIRD RD-12-S-P30-F-R-U U15 SERIES

SYMBOL	DESCRIPTION
	RAIN BIRD PESB-PRS-D ZONE CONTROL VALVES W/ BASELINE BL-5201 (1) STATION BICODER
XX	BASELINE BL-5315B SOIL SENSOR, PLACE ON EITHER SIDE
25 30 35	RAIN BIRD 5006-PL-PC-SAM-R-SS-MPR
	RAIN BIRD 6504-PC, FC-SS-R #14, 59' RADIUS
	PVC CLASS 200 SDR 21 MAINLINE SLEEVE, 12" SIZE
	PVC CLASS 200 SDR 21, 2" WIRE SLEEVING
	PVC CLASS 200 SDR 21, FOR LATERAL LINES, SIZED MINIMUM TWICE THAT OF THE PIPE
	4" IRRIGATION SERVICE LINE: DUCTILE IRON PIPE- CLASS 350
	6" IRRIGATION MAINLINE: PVC CLASS 200 SDR 21
	IRRIGATION LATERAL LINE: PVC CLASS 200 SDR 21

SYMBOL	DESCRIPTION
	8561 4" FLANGED GATE VALVE
M	4" WATER METER
	6" FEBCO 880V REDUCED PRESSURE BACKFLOW PREVENTER
	NETAFIM PHOTO DIODE REGISTER 3-8 (TO FIT 6") MASTER VALVE/FLOW SENSOR
	1" DRAIN VALVE
P	PPS BOOSTER PUMPING SYSTEM
	RAIN BIRD 44-LRC
	LEEMCO LMV-66BB, 6IN. X 6IN. GATE VALVE
A	BASELINE BL-3200P TWO-WIRE CONTROLLER
R	HUNTER RAIN-CLIK RAIN SENSOR
XX	BASELINE BL-LA01 TWO-WIRE SURGE ARRESTOR

VALVE CALLOUT
- # — VALVE NUMBER
- # — VALVE FLOW
- #" — VALVE SIZE
- X — ZONE TYP.

PROPOSED MULCH BED AREAS
- CHRUSHED GRANITE
- STEEL EDGING

811 Know what's below. Call before you dig.

CAUTION - NOTICE TO CONTRACTOR

THE CONTRACTOR IS SPECIFICALLY CAUTIONED THAT THE LOCATION AND/OR ELEVATION OF EXISTING UTILITIES AS SHOWN ON THESE PLANS IS BASED ON RECORDS OF THE VARIOUS UTILITY COMPANIES AND, WHERE POSSIBLE, MEASUREMENTS TAKEN IN THE FIELD. THE INFORMATION IS NOT TO BE RELIED ON AS BEING EXACT OR COMPLETE. THE CONTRACTOR MUST CALL THE LOCAL UTILITY LOCATION CENTER AT LEAST 48 HOURS BEFORE ANY EXCAVATION TO REQUEST EXACT FIELD LOCATIONS OF THE UTILITIES. IT SHALL BE THE RESPONSIBILITY OF THE CONTRACTOR TO RELOCATE ALL EXISTING UTILITIES WHICH CONFLICT WITH THE PROPOSED IMPROVEMENTS SHOWN ON THE PLANS.

THE CONTRACTOR SHALL BE RESPONSIBLE FOR ANY DAMAGE TO EXISTING IMPROVEMENTS AND UTILITIES AND SHALL REPAIR ANY DAMAGE AT HIS EXPENSE.

Farnsworth GROUP
5613 DTC PARKWAY, SUITE 1100
GREENWOOD VILLAGE, COLORADO 80111
(303) 692-8838 / info@f-w.com
www.f-w.com
Engineers | Architects | Surveyors | Scientists

ISSUE:
#	DATE:	DESCRIPTION:

PREPARED UNDER THE DIRECT SUPERVISION OF JOSEPH L. WILSON, PLA, CID, CLIA, QWEL, WWLP, COLORADO LICENCE REGISTRATION LA-304

PRELIMINARY
NOT FOR CONSTRUCTION
THESE DRAWINGS AND/OR SPECIFICATIONS ARE BEING ISSUED FOR INFORMATION ONLY. THEY ARE NOT INTENDED TO BE USED FOR FINAL PRICING OR FOR CONSTRUCTION. THEY ARE PRELIMINARY IN NATURE AND ARE SUBJECT TO CHANGE PRIOR TO ISSUANCE OF THE PROJECT CONSTRUCTION DOCUMENTS. ANY PRICING ATTAINED BY THE CONTRACTOR VIA THE USE OF THESE DOCUMENTS IS CONSIDERED TO BE AT THE RISK OF THE CONTRACTOR.

PROJECT:
CITY OF THORNTON
9500 CIVIC CENTER DRIVE
THORNTON, COLORADO 80229

CHERRY PARK IRRIGATION REHABILITATION, PROJECT 22-46B

11500 BIRCH DR,
THORNTON, CO
80233

DATE:	07/11/2025
DESIGNED:	JLW
DRAWN:	JLW
REVIEWED:	JLW
FIELD BOOK NO.:	-

SHEET TITLE:
IRRIGATION PLAN

SHEET NUMBER:
IR1.1

PROJECT NO.: 0231420.00

CONSTRUCTION NOTES

6 **PROPOSED CONTROLLER "A"**

- TYPE: PEDESTAL MOUNT, 200-STATION BASELINE BL-3200P 2-WIRE CONTROLLER IN ONE CABINET, REMOTE READY, WITH CELLULAR COMMUNICATION PACKAGE PER LEGEND.
- LOCATION: CONTROLLER LOCATION WITHIN THE CRUSHED GRANITE AREA AND MUST BE APPROVED BY THE CITY, CITY'S REPRESENTATIVE, OR CONSULTANT PRIOR TO INSTALLATION.
- ELECTRICAL CONNECTION: NEW ELECTRICAL CONNECTION REQUIRED. CONTRACTOR TO PROVIDE ALL NECESSARY ELECTRICAL WORK, INCLUDING WIRES, CONDUITS, TRANSFORMER (IF NEEDED), AND POWER CONNECTION, CONFORMING TO LOCAL CODES.
- GROUNDING: CONTROLLER MUST BE GROUNDED PER MANUFACTURER'S RECOMMENDATIONS.
- SIGNAL CABLE: EXTEND PAIGE P7171-D ARMORED SIGNAL CABLE FROM THE FLOW SENSOR AND CONNECT THE MASTER VALVE TO THE CONTROLLER VIA TWO-WIRE COMMUNICATION CABLE AS PER MANUFACTURER'S REQUIREMENTS. CONNECT WIRES TO THE APPROPRIATE SENSOR INPUT PORTS. CONTRACTOR TO OBTAIN AND PAY FOR ALL NECESSARY FEES AND PERMITS.
- WARRANTY: INCLUDE DBC IRRIGATION SUPPLY BASELINE EXTENDED WARRANTY.
- RAIN SENSOR: MOUNT ONE HUNTER RAIN CLIK DEVICE ON A UTILITY POLE WHERE INDICATED, CLEAR OF ANY OVERHANGS OR OBSTRUCTIONS. INSTALL THE RAIN SENSOR RECEIVER IN THE CONTROLLER ENCLOSURE. FINAL LOCATION MUST BE APPROVED BY THE OWNER'S REPRESENTATIVE OR PROJECT PM PRIOR TO INSTALLATION.
- QUANTITIES: SCHEDULE QUANTITIES ARE FOR CONTRACTOR CONVENIENCE ONLY. CONTRACTOR IS RESPONSIBLE FOR VERIFYING ALL AREAS AND QUANTITIES REQUIRED TO COMPLETE THE WORK AS SHOWN ON THE PLANS AND DESCRIBED IN THE DETAILS AND NOTES. ALL APPLICABLE COSTS MUST BE INCLUDED IN BID AMOUNTS. IN CASE OF DISCREPANCIES BETWEEN THE PLAN AND SCHEDULE, THE GRAPHIC PLAN SHALL PREVAIL.

7 **POINT-OF-CONNECTION #1-GIS ADDRESS: 11592.5 BIRCH DR**

INSTALL P.O.C. IRRIGATION EQUIPMENT FROM THE TAP TO THE P.O.C. QUICK COUPLER PER CITY OF THORNTON STANDARDS, SPECIFICATIONS, AND DETAIL. THIS INCLUDES:

- STREET PAVEMENT CUTS TO METER AND MAIN
- 4" TAP AND DIP SERVICE LINE TO THE METER
- 4" GATE VALVE
- 4" IRRIGATION GATE TAP
- 4" METER
- 6" 'K' COPPER PIPE FROM THE METER TO THE PUMP
- 6" BACKFLOW PREVENTION WITHIN A GREEN, HINGED, LOCKABLE ENCLOSURE BY V.I.T. OR APPROVED EQUAL.
- 6" MASTER VALVE/FLOW SENSOR PER LEGEND
- MANUAL DRAIN VALVE
- BOOSTER PUMP PER LEGEND, SEE ADDITIONAL BOOSTER PUMP NOTES THIS SHEET.
- 6" CLASS 315 PVC FROM PUMP TO THE QUICK COUPLER
- QUICK COUPLER VALVE

NOTIFY THE CITY AND DESIGNER OF ANY IRREGULARITIES WITH THE IRRIGATION P.O.C. SIZE OR INSTALLATION. LOCATE ALL ABOVE-GROUND EQUIPMENT WITHIN THE CRUSHED GRANITE AREA OR AS DIRECTED BY THE CITY'S REPRESENTATIVE. THE IRRIGATION SYSTEM IS DESIGNED TO OPERATE WITHIN A 48-HOUR PER WEEK, 8 HOURS A DAY WATER WINDOW, ALLOWING FOR MULTIPLE VALVES TO OPERATE SIMULTANEOUSLY AS LONG AS THE DESIGN FLOW SHOWN IN THE P.O.C. EQUIPMENT SCHEDULE IS NOT EXCEEDED.

8 CONNECT NEW 6" MAINLINE TO THE EXISTING NON-POTABLE SERVICE. THE SYSTEM PRIMARILY USES NON-POTABLE SERVICE BUT CAN BE MANUALLY SWITCHED TO DOMESTIC POTABLE WATER DURING LIMITED NON-POTABLE WATER AVAILABILITY PERIODS.

9 ACID INJECTION VAULT TO REMAIN. REPLACE THE EXISTING BERMAD HYDROMETER WITH A NETAFIM HYDROMETER WITH A PHOTO DIODE REGISTER. EXTEND PAIGE P7171-D ARMORED SIGNAL CABLE FROM THE HYDROMETER TO THE CONTROLLER VIA TWO-WIRE COMMUNICATION CABLE AS PER MANUFACTURER'S REQUIREMENTS.

10 REMOVE THE TWO EXISTING POTABLE 3-INCH TAP/METERS AT 4801 E 115TH COURT AND 11600 BIRCH DRIVE. TAP ABANDONMENT MUST CONFORM TO CITY OF THORNTON STANDARDS AND SPECIFICATIONS SECTION 200 FOR TAPS OVER 1½". A TRAFFIC PERMIT/PLAN IS REQUIRED FROM THE CONTRACTOR FOR TAP ABANDONMENT. PROVIDE 48-HOUR NOTICE TO AFFECTED RESIDENTS ONCE ABANDONMENT DATES ARE SET, WITH NOTIFICATION AS DOOR-HANGERS. ALL PAVEMENT PATCHING MUST CONFORM TO CITY OF THORNTON STANDARDS AND SPECIFICATIONS SECTION 500.

11 REMOVE EXISTING ±50SF PUMP HOUSE STRUCTURE, CONTROLLER(S), AND ASSOCIATED FOUNDATIONS. REPLACE WITH TURF SOD TO MATCH EXISTING PARK'S TURF BLEND AS INDICATED ON THE PLANS. RETAIN ALL ABOVE-GROUND EQUIPMENT. ENSURE ELECTRICAL POWER SERVICE IS DISCONNECTED. REMOVE/STUB/CAP ANY EXISTING ABOVE-GROUND WATER PIPING AND ELECTRICAL INFRASTRUCTURE. ABANDON UNDERGROUND PIPING AND EQUIPMENT PER ADDITIONAL IRRIGATION NOTES.

MATCHLINE - SEE SHEET IR1.1

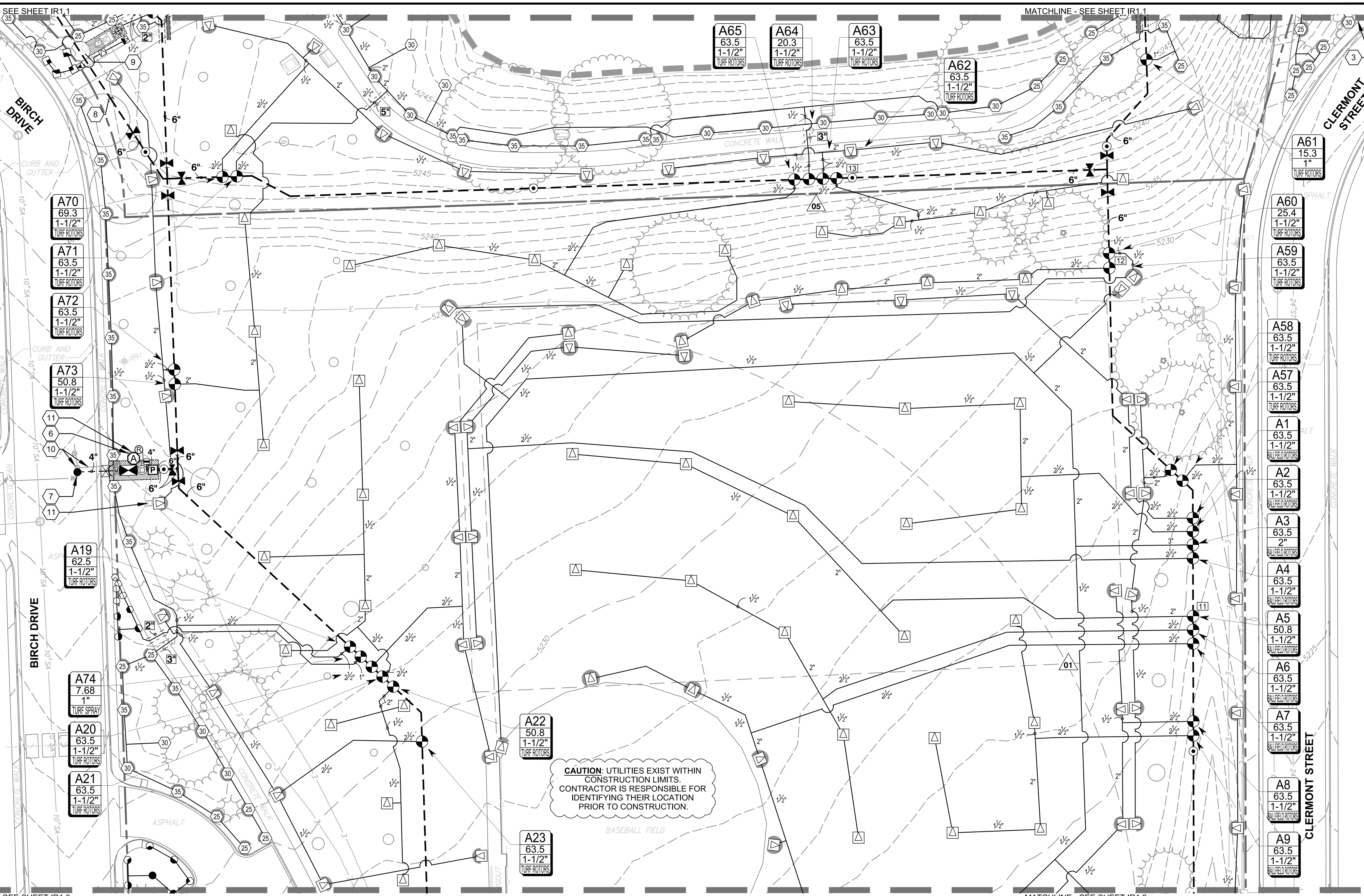

MATCHLINE - SEE SHEET IR1.3

2 IRRIGATION PLAN

SCALE: 1"=30'

0 15 30 60 U.S. SURVEY FEET

NORTH

ADDITIONAL BOOSTER PUMP NOTES

1. PPS BOOSTER PUMPING SYSTEM SHALL BE INSTALLED ON A SUFFICIENTLY SIZED CONCRETE PAD, WITHIN THE CRUSHED GRANITE MULCH BED AREA AS SHOWN ON PLANS.
2. CONCRETE PAD SHALL HAVE A MINIMUM THICKNESS OF 6 INCHES.
3. PPS BOOSTER PUMPING SYSTEM TO BE INSTALLED PER PLANS.

CAUTION - NOTICE TO CONTRACTOR

THE CONTRACTOR IS SPECIFICALLY CAUTIONED THAT THE LOCATION AND/OR ELEVATION OF EXISTING UTILITIES AS SHOWN ON THESE PLANS IS BASED ON RECORDS OF THE VARIOUS UTILITY COMPANIES AND, WHERE POSSIBLE, MEASUREMENTS TAKEN IN THE FIELD. THE INFORMATION IS NOT TO BE RELIED ON AS BEING EXACT OR COMPLETE. THE CONTRACTOR MUST CALL THE LOCAL UTILITY LOCATION CENTER AT LEAST 48 HOURS BEFORE ANY EXCAVATION TO REQUEST EXACT FIELD LOCATIONS OF THE UTILITIES. IT SHALL BE THE RESPONSIBILITY OF THE CONTRACTOR TO RELOCATE ALL EXISTING UTILITIES WHICH CONFLICT WITH THE PROPOSED IMPROVEMENTS SHOWN ON THE PLANS.

THE CONTRACTOR SHALL BE RESPONSIBLE FOR ANY DAMAGE TO EXISTING IMPROVEMENTS AND UTILITIES AND SHALL REPAIR ANY DAMAGE AT HIS EXPENSE.

811 Know what's below. Call before you dig.

IRRIGATION LEGEND

SYMBOL	DESCRIPTION
EST LCS RCS CST SST	RAIN BIRD RD-06-S-P30-F-R-U 15 STRIP SERIES
Q T H F	RAIN BIRD RD-06-S-P30-F-R-U U8 SERIES
Q T H F	RAIN BIRD RD-06-S-P30-F-R-U U10 SERIES
Q T H TT TQ F	RAIN BIRD RD-06-S-P30-F-R-U U12 SERIES
Q T H TT TQ F	RAIN BIRD RD-06-S-P30-F-R-U U15 SERIES
EST LCS RCS CST SST	RAIN BIRD RD-12-S-P30-F-R-U 15 STRIP SERIES
Q T H F	RAIN BIRD RD-12-S-P30-F-R-U U8 SERIES
Q T H F	RAIN BIRD RD-12-S-P30-F-R-U U10 SERIES
Q T H TT TQ F	RAIN BIRD RD-12-S-P30-F-R-U U12 SERIES
Q T H TT TQ F	RAIN BIRD RD-12-S-P30-F-R-U U15 SERIES

SYMBOL	DESCRIPTION
	RAIN BIRD PESB-PRS-D ZONE CONTROL VALVES W/ BASELINE BL-5201 (1) STATION BICODER
XX	BASELINE BL-5315B SOIL SENSOR, PLACE ON EITHER SIDE
25 30 35	RAIN BIRD 5006-PL-PC-SAM-R-SS-MPR
	RAIN BIRD 6504-PC, FC-SS-R #14, 59' RADIUS
	PVC CLASS 200 SDR 21 MAINLINE SLEEVE, 12" SIZE
	PVC CLASS 200 SDR 21, 2" WIRE SLEEVING
	PVC CLASS 200 SDR 21, FOR LATERAL LINES, SIZED MINIMUM TWICE THAT OF THE PIPE
	4" IRRIGATION SERVICE LINE: DUCTILE IRON PIPE- CLASS 350
	6" IRRIGATION MAINLINE: PVC CLASS 200 SDR 21
	IRRIGATION LATERAL LINE: PVC CLASS 200 SDR 21

SYMBOL	DESCRIPTION
	8561 4" FLANGED GATE VALVE
M	4" WATER METER
	6" FEBCO 880V REDUCED PRESSURE BACKFLOW PREVENTER
	NETAFIM PHOTO DIODE REGISTER 3-8 (TO FIT 6") MASTER VALVE/FLOW SENSOR
	1" DRAIN VALVE
P	PPS BOOSTER PUMPING SYSTEM
	RAIN BIRD 44-LRC
	LEEMCO LMV-66BB, 6IN. X 6IN. GATE VALVE
A	BASELINE BL-3200P TWO-WIRE CONTROLLER
R	HUNTER RAIN-CLIK RAIN SENSOR
XX	BASELINE BL-LA01 TWO-WIRE SURGE ARRESTOR

VALVE CALLOUT

- # — VALVE NUMBER
- # — VALVE FLOW
- #" — VALVE SIZE
- X — ZONE TYP.

PROPOSED MULCH BED AREAS

- CHRUSHED GRANITE
- STEEL EDGING

Farnsworth GROUP
5613 DTC PARKWAY, SUITE 1100
GREENWOOD VILLAGE, COLORADO 80111
(303) 692-8838 / info@f-w.com
www.f-w.com
Engineers | Architects | Surveyors | Scientists

ISSUE:

#	DATE:	DESCRIPTION:

PREPARED UNDER THE DIRECT SUPERVISION OF JOSEPH L. WILSON, PLA, CID, CLIA, QWEL, WWLP, COLORADO LICENCE REGISTRATION LA-304

PRELIMINARY NOT FOR CONSTRUCTION

THESE DRAWINGS AND/OR SPECIFICATIONS ARE BEING ISSUED FOR INFORMATION ONLY. THEY ARE NOT INTENDED TO BE USED FOR FINAL PRICING OR FOR CONSTRUCTION. THEY ARE PRELIMINARY IN NATURE AND ARE SUBJECT TO CHANGE PRIOR TO ISSUANCE OF THE PROJECT CONSTRUCTION DOCUMENTS. ANY PRICING ATTAINED BY THE CONTRACTOR VIA THE USE OF THESE DOCUMENTS IS CONSIDERED TO BE AT THE RISK OF THE CONTRACTOR.

PROJECT:

CITY OF THORNTON
9500 CIVIC CENTER DRIVE
THORNTON, COLORADO 80229

CHERRY PARK IRRIGATION REHABILITATION, PROJECT 22-46B

11500 BIRCH DR,
THORNTON, CO
80233

DATE:	07/11/2025
DESIGNED:	JLW
DRAWN:	JLW
REVIEWED:	JLW
FIELD BOOK NO.:	-

SHEET TITLE:

IRRIGATION PLAN

SHEET NUMBER:

IR1.2

PROJECT NO.: 0231420.00

0231420.00_20250523.dwg | 1/12/2026 4:03 PM

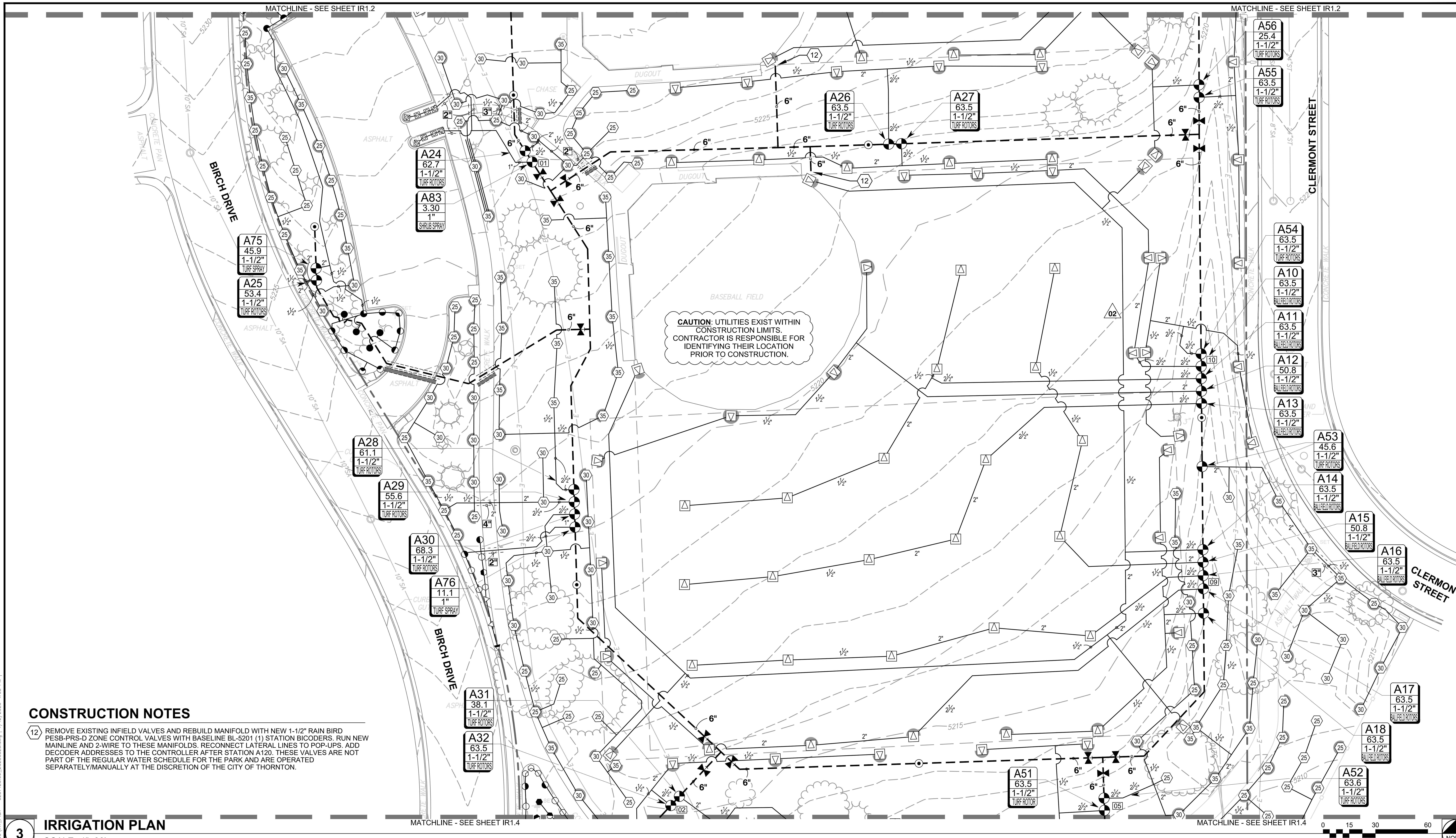

CONSTRUCTION NOTES

(12) REMOVE EXISTING INFIELD VALVES AND REBUILD MANIFOLD WITH NEW 1-1/2" RAIN BIRD PESB-PRS-D ZONE CONTROL VALVES WITH BASELINE BL-5201 (1) STATION BICODERS. RUN NEW MAINLINE AND 2-WIRE TO THESE MANIFOLDS. RECONNECT LATERAL LINES TO POP-UPS. ADD DECODER ADDRESSES TO THE CONTROLLER AFTER STATION A120. THESE VALVES ARE NOT PART OF THE REGULAR WATER SCHEDULE FOR THE PARK AND ARE OPERATED SEPARATELY/MANUALLY AT THE DISCRETION OF THE CITY OF THORNTON.

3 **IRRIGATION PLAN**
SCALE: 1"=30'

811 Know what's below. Call before you dig.

CAUTION - NOTICE TO CONTRACTOR

THE CONTRACTOR IS SPECIFICALLY CAUTIONED THAT THE LOCATION AND/OR ELEVATION OF EXISTING UTILITIES AS SHOWN ON THESE PLANS IS BASED ON RECORDS OF THE VARIOUS UTILITY COMPANIES AND, WHERE POSSIBLE, MEASUREMENTS TAKEN IN THE FIELD. THE INFORMATION IS NOT TO BE RELIED ON AS BEING EXACT OR COMPLETE. THE CONTRACTOR MUST CALL THE LOCAL UTILITY LOCATION CENTER AT LEAST 48 HOURS BEFORE ANY EXCAVATION TO REQUEST EXACT FIELD LOCATIONS OF THE UTILITIES. IT SHALL BE THE RESPONSIBILITY OF THE CONTRACTOR TO RELOCATE ALL EXISTING UTILITIES WHICH CONFLICT WITH THE PROPOSED IMPROVEMENTS SHOWN ON THE PLANS.

THE CONTRACTOR SHALL BE RESPONSIBLE FOR ANY DAMAGE TO EXISTING IMPROVEMENTS AND UTILITIES AND SHALL REPAIR ANY DAMAGE AT HIS EXPENSE.

IRRIGATION LEGEND

SYMBOL	DESCRIPTION
EST LCS RCS CST SST	RAIN BIRD RD-06-S-P30-F-R-U 15 STRIP SERIES
Q T H F	RAIN BIRD RD-06-S-P30-F-R-U U8 SERIES
Q T H F	RAIN BIRD RD-06-S-P30-F-R-U U10 SERIES
Q T H TT TQ F	RAIN BIRD RD-06-S-P30-F-R-U U12 SERIES
Q T H TT TQ F	RAIN BIRD RD-06-S-P30-F-R-U U15 SERIES
EST LCS RCS CST SST	RAIN BIRD RD-12-S-P30-F-R-U 15 STRIP SERIES
Q T H F	RAIN BIRD RD-12-S-P30-F-R-U U8 SERIES
Q T H F	RAIN BIRD RD-12-S-P30-F-R-U U10 SERIES
Q T H TT TQ F	RAIN BIRD RD-12-S-P30-F-R-U U12 SERIES
Q T H TT TQ F	RAIN BIRD RD-12-S-P30-F-R-U U15 SERIES

SYMBOL	DESCRIPTION
	RAIN BIRD PESB-PRS-D ZONE CONTROL VALVES W/ BASELINE BL-5201 (1) STATION BICODER
XX	BASELINE BL-5315B SOIL SENSOR, PLACE ON EITHER SIDE
25 30 35	RAIN BIRD 5006-PL-PC-SAM-R-SS-MPR
	RAIN BIRD 6504-PC, FC-SS-R #14, 59' RADIUS
	PVC CLASS 200 SDR 21 MAINLINE SLEEVE, 12" SIZE
	PVC CLASS 200 SDR 21, 2" WIRE SLEEVING
	PVC CLASS 200 SDR 21, FOR LATERAL LINES, SIZED MINIMUM TWICE THAT OF THE PIPE
	4" IRRIGATION SERVICE LINE: DUCTILE IRON PIPE- CLASS 350
	6" IRRIGATION MAINLINE: PVC CLASS 200 SDR 21
	IRRIGATION LATERAL LINE: PVC CLASS 200 SDR 21

SYMBOL	DESCRIPTION
	8561 4" FLANGED GATE VALVE
M	4" WATER METER
	6" FEBCO 880V REDUCED PRESSURE BACKFLOW PREVENTER
	NETAFIM PHOTO DIODE REGISTER 3-8 (TO FIT 6") MASTER VALVE/FLOW SENSOR
	1" DRAIN VALVE
P	PPS BOOSTER PUMPING SYSTEM
	RAIN BIRD 44-LRC
	LEEMCO LMV-66BB, 6IN. X 6IN. GATE VALVE
A	BASELINE BL-3200P TWO-WIRE CONTROLLER
R	HUNTER RAIN-CLIK RAIN SENSOR
XX	BASELINE BL-LA01 TWO-WIRE SURGE ARRESTOR

VALVE CALLOUT

- # — VALVE NUMBER
- # — VALVE FLOW
- #" — VALVE SIZE
- X — ZONE TYP.

PROPOSED MULCH BED AREAS

- CHRUSHED GRANITE
- STEEL EDGING

Farnsworth GROUP
5613 DTC PARKWAY, SUITE 1100
GREENWOOD VILLAGE, COLORADO 80111
(303) 692-8838 / info@f-w.com
www.f-w.com
Engineers | Architects | Surveyors | Scientists

ISSUE:

#	DATE:	DESCRIPTION:

PREPARED UNDER THE DIRECT SUPERVISION OF JOSEPH L. WILSON, PLA, CID, CLIA, QWEL, WWLP, COLORADO LICENCE REGISTRATION LA-304

PRELIMINARY
NOT FOR CONSTRUCTION
THESE DRAWINGS AND/OR SPECIFICATIONS ARE BEING ISSUED FOR INFORMATION ONLY. THEY ARE NOT INTENDED TO BE USED FOR FINAL PRICING OR FOR CONSTRUCTION. THEY ARE PRELIMINARY IN NATURE AND ARE SUBJECT TO CHANGE PRIOR TO ISSUANCE OF THE PROJECT CONSTRUCTION DOCUMENTS. ANY PRICING ATTAINED BY THE CONTRACTOR VIA THE USE OF THESE DOCUMENTS IS CONSIDERED TO BE AT THE RISK OF THE CONTRACTOR.

PROJECT:
CITY OF THORNTON
9500 CIVIC CENTER DRIVE
THORNTON, COLORADO 80229

CHERRY PARK IRRIGATION REHABILITATION, PROJECT 22-46B

11500 BIRCH DR,
THORNTON, CO
80233

DATE:	07/11/2025
DESIGNED:	JLW
DRAWN:	JLW
REVIEWED:	JLW
FIELD BOOK NO.:	-

SHEET TITLE:
IRRIGATION PLAN

SHEET NUMBER:
IR1.3

PROJECT NO.: 0231420.00

| ggreen | J:\2023\0231420.00 – Cherry Park Irrigation Rehabilitation\04_drawings\DWG\IR1_Plan – 0231420.00_20250523.dwg | 1/12/2026 4:03 PM |

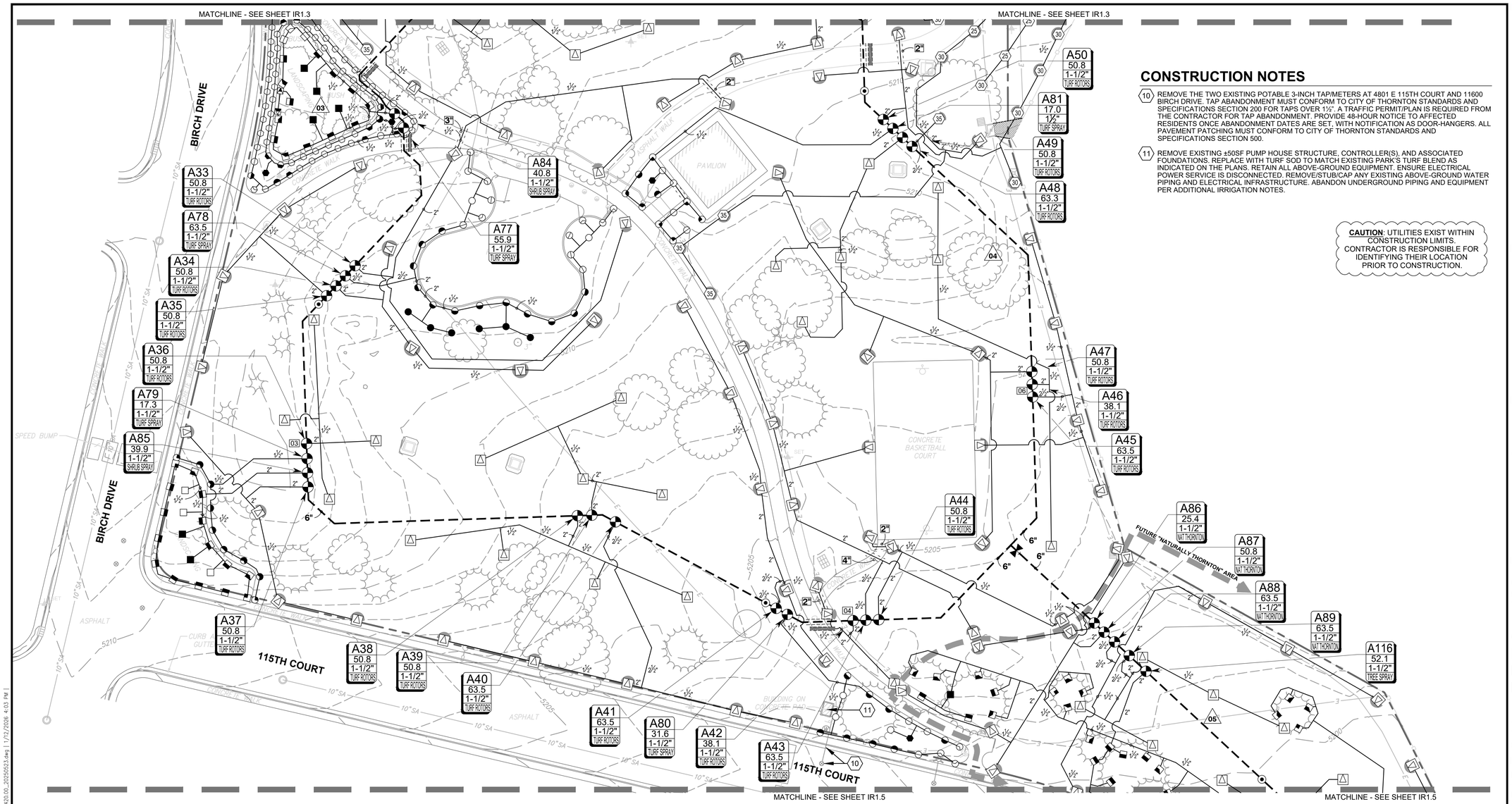

4 IRRIGATION PLAN

SCALE: 1"=30'

0 15 30 60 U.S. SURVEY FEET

NORTH

CONSTRUCTION NOTES

10. REMOVE THE TWO EXISTING POTABLE 3-INCH TAP/METERS AT 4801 E 115TH COURT AND 11600 BIRCH DRIVE. TAP ABANDONMENT MUST CONFORM TO CITY OF THORNTON STANDARDS AND SPECIFICATIONS SECTION 200 FOR TAPS OVER 1½". A TRAFFIC PERMIT/PLAN IS REQUIRED FROM THE CONTRACTOR FOR TAP ABANDONMENT. PROVIDE 48-HOUR NOTICE TO AFFECTED RESIDENTS ONCE ABANDONMENT DATES ARE SET, WITH NOTIFICATION AS DOOR-HANGERS. ALL PAVEMENT PATCHING MUST CONFORM TO CITY OF THORNTON STANDARDS AND SPECIFICATIONS SECTION 500.

11. REMOVE EXISTING ±50SF PUMP HOUSE STRUCTURE, CONTROLLER(S), AND ASSOCIATED FOUNDATIONS. REPLACE WITH TURF SOD TO MATCH EXISTING PARK'S TURF BLEND AS INDICATED ON THE PLANS. RETAIN ALL ABOVE-GROUND EQUIPMENT. ENSURE ELECTRICAL POWER SERVICE IS DISCONNECTED. REMOVE/STUB/CAP ANY EXISTING ABOVE-GROUND WATER PIPING AND ELECTRICAL INFRASTRUCTURE. ABANDON UNDERGROUND PIPING AND EQUIPMENT PER ADDITIONAL IRRIGATION NOTES.

CAUTION: UTILITIES EXIST WITHIN CONSTRUCTION LIMITS. CONTRACTOR IS RESPONSIBLE FOR IDENTIFYING THEIR LOCATION PRIOR TO CONSTRUCTION.

CAUTION - NOTICE TO CONTRACTOR

THE CONTRACTOR IS SPECIFICALLY CAUTIONED THAT THE LOCATION AND/OR ELEVATION OF EXISTING UTILITIES AS SHOWN ON THESE PLANS IS BASED ON RECORDS OF THE VARIOUS UTILITY COMPANIES AND, WHERE POSSIBLE, MEASUREMENTS TAKEN IN THE FIELD. THE INFORMATION IS NOT TO BE RELIED ON AS BEING EXACT OR COMPLETE. THE CONTRACTOR MUST CALL THE LOCAL UTILITY LOCATION CENTER AT LEAST 48 HOURS BEFORE ANY EXCAVATION TO REQUEST EXACT FIELD LOCATIONS OF THE UTILITIES. IT SHALL BE THE RESPONSIBILITY OF THE CONTRACTOR TO RELOCATE ALL EXISTING UTILITIES WHICH CONFLICT WITH THE PROPOSED IMPROVEMENTS SHOWN ON THE PLANS.

THE CONTRACTOR SHALL BE RESPONSIBLE FOR ANY DAMAGE TO EXISTING IMPROVEMENTS AND UTILITIES AND SHALL REPAIR ANY DAMAGE AT HIS EXPENSE.

811 Know what's below. Call before you dig.

IRRIGATION LEGEND

SYMBOL	DESCRIPTION
EST LCS RCS CST SST	RAIN BIRD RD-06-S-P30-F-R-U 15 STRIP SERIES
Q T H F	RAIN BIRD RD-06-S-P30-F-R-U U8 SERIES
Q T H F	RAIN BIRD RD-06-S-P30-F-R-U U10 SERIES
Q T H TT TQ F	RAIN BIRD RD-06-S-P30-F-R-U U12 SERIES
Q T H TT TQ F	RAIN BIRD RD-06-S-P30-F-R-U U15 SERIES
EST LCS RCS CST SST	RAIN BIRD RD-12-S-P30-F-R-U 15 STRIP SERIES
Q T H F	RAIN BIRD RD-12-S-P30-F-R-U U8 SERIES
Q T H F	RAIN BIRD RD-12-S-P30-F-R-U U10 SERIES
Q T H TT TQ F	RAIN BIRD RD-12-S-P30-F-R-U U12 SERIES
Q T H TT TQ F	RAIN BIRD RD-12-S-P30-F-R-U U15 SERIES

SYMBOL	DESCRIPTION
	RAIN BIRD PESB-PRS-D ZONE CONTROL VALVES W/ BASELINE BL-5201 (1) STATION BICODER
XX	BASELINE BL-5315B SOIL SENSOR, PLACE ON EITHER SIDE
25 30 35	RAIN BIRD 5006-PL-PC-SAM-R-SS-MPR
	RAIN BIRD 6504-PC, FC-SS-R #14, 59' RADIUS
	PVC CLASS 200 SDR 21 MAINLINE SLEEVE, 12" SIZE
	PVC CLASS 200 SDR 21, 2" WIRE SLEEVING
	PVC CLASS 200 SDR 21, FOR LATERAL LINES, SIZED MINIMUM TWICE THAT OF THE PIPE
	4" IRRIGATION SERVICE LINE: DUCTILE IRON PIPE- CLASS 350
	6" IRRIGATION MAINLINE: PVC CLASS 200 SDR 21
	IRRIGATION LATERAL LINE: PVC CLASS 200 SDR 21

SYMBOL	DESCRIPTION
	8561 4" FLANGED GATE VALVE
M	4" WATER METER
	6" FEBCO 880V REDUCED PRESSURE BACKFLOW PREVENTER
	NETAFIM PHOTO DIODE REGISTER 3-8 (TO FIT 6") MASTER VALVE/FLOW SENSOR
	1" DRAIN VALVE
P	PPS BOOSTER PUMPING SYSTEM
	RAIN BIRD 44-LRC
	LEEMCO LMV-66BB, 6IN. X 6IN. GATE VALVE
A	BASELINE BL-3200P TWO-WIRE CONTROLLER
R	HUNTER RAIN-CLIK RAIN SENSOR
XX	BASELINE BL-LA01 TWO-WIRE SURGE ARRESTOR

VALVE CALLOUT

- # — VALVE NUMBER
- # — VALVE FLOW
- #" — VALVE SIZE
- X — ZONE TYP.

PROPOSED MULCH BED AREAS

- CHRUSHED GRANITE
- STEEL EDGING

Farnsworth GROUP
5613 DTC PARKWAY, SUITE 1100
GREENWOOD VILLAGE, COLORADO 80111
(303) 692-8838 / info@f-w.com
www.f-w.com
Engineers | Architects | Surveyors | Scientists

ISSUE:

#	DATE:	DESCRIPTION:

PREPARED UNDER THE DIRECT SUPERVISION OF JOSEPH L. WILSON, PLA, CID, CLIA, QWEL, WWLP, COLORADO LICENCE REGISTRATION LA-304

PRELIMINARY
NOT FOR CONSTRUCTION

THESE DRAWINGS AND/OR SPECIFICATIONS ARE BEING ISSUED FOR INFORMATION ONLY. THEY ARE NOT INTENDED TO BE USED FOR FINAL PRICING OR FOR CONSTRUCTION. THEY ARE PRELIMINARY IN NATURE AND ARE SUBJECT TO CHANGE PRIOR TO ISSUANCE OF THE PROJECT CONSTRUCTION DOCUMENTS. ANY PRICING ATTAINED BY THE CONTRACTOR VIA THE USE OF THESE DOCUMENTS IS CONSIDERED TO BE AT THE RISK OF THE CONTRACTOR.

PROJECT:

CITY OF THORNTON
9500 CIVIC CENTER DRIVE
THORNTON, COLORADO 80229

CHERRY PARK IRRIGATION REHABILITATION, PROJECT 22-46B

11500 BIRCH DR,
THORNTON, CO
80233

DATE:	07/11/2025
DESIGNED:	JLW
DRAWN:	JLW
REVIEWED:	JLW
FIELD BOOK NO.:	-

SHEET TITLE:

IRRIGATION PLAN

SHEET NUMBER:

IR1.4

PROJECT NO.: 0231420.00

jgreen | J:\2023\0231420.00 - Cherry Park Irrigation Rehabilitation\04_drawings\UMC\IR_Plan - 0231420.00_20250623.dwg | 7/12/2025 4:33 PM |

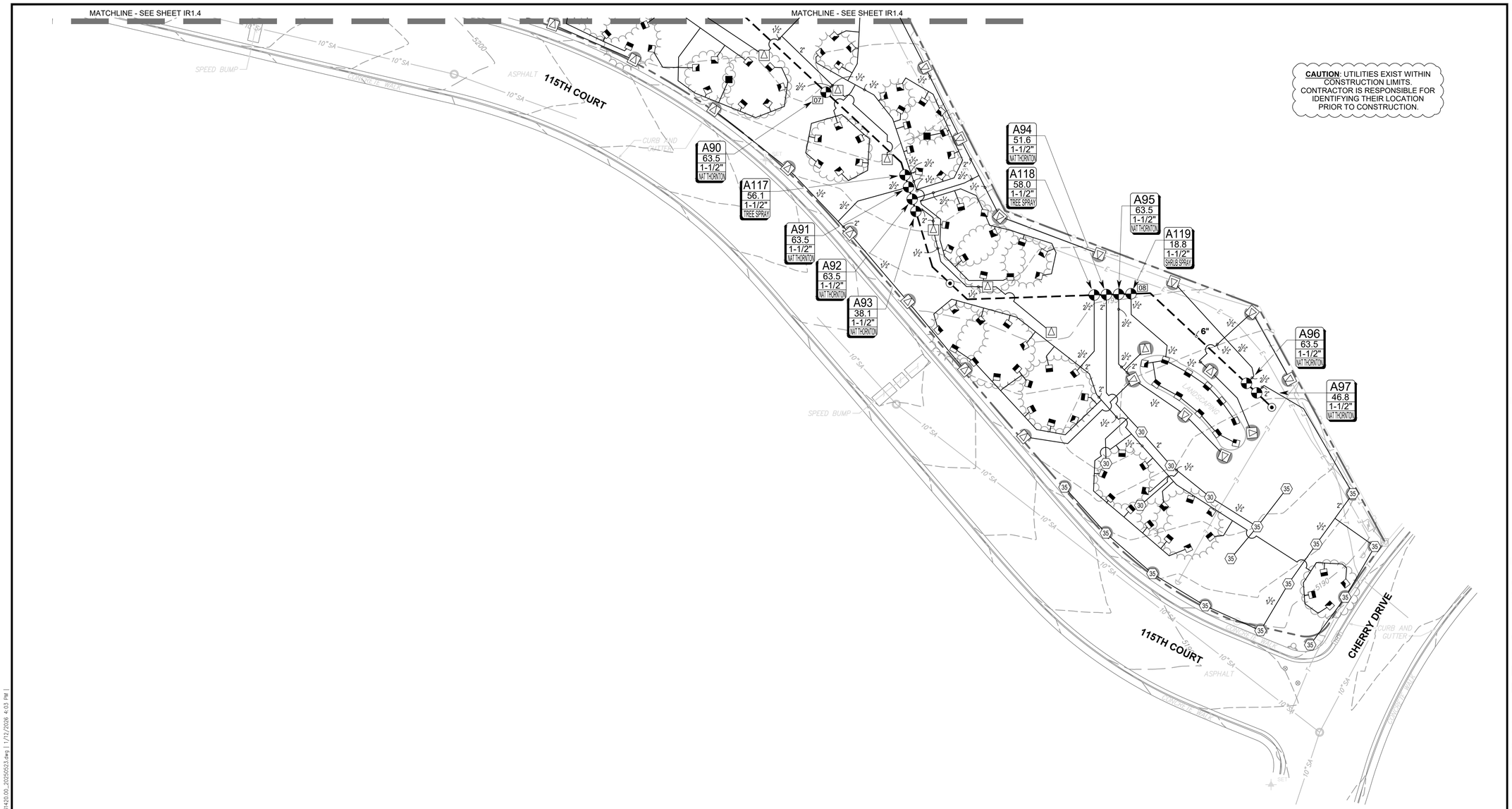

CAUTION: UTILITIES EXIST WITHIN CONSTRUCTION LIMITS. CONTRACTOR IS RESPONSIBLE FOR IDENTIFYING THEIR LOCATION PRIOR TO CONSTRUCTION.

5 **IRRIGATION PLAN**

SCALE: 1"=30'

IRRIGATION LEGEND

SYMBOL	DESCRIPTION
EST LCS RCS CST SST / Q T H F	RAIN BIRD RD-06-S-P30-F-R-U 15 STRIP SERIES
Q T H F	RAIN BIRD RD-06-S-P30-F-R-U U8 SERIES
Q T H F	RAIN BIRD RD-06-S-P30-F-R-U U10 SERIES
Q T H TT TQ F	RAIN BIRD RD-06-S-P30-F-R-U U12 SERIES
Q T H TT TQ F	RAIN BIRD RD-06-S-P30-F-R-U U15 SERIES
EST LCS RCS CST SST / Q T H F	RAIN BIRD RD-12-S-P30-F-R-U 15 STRIP SERIES
Q T H F	RAIN BIRD RD-12-S-P30-F-R-U U8 SERIES
Q T H F	RAIN BIRD RD-12-S-P30-F-R-U U10 SERIES
Q T H TT TQ F	RAIN BIRD RD-12-S-P30-F-R-U U12 SERIES
Q T H TT TQ F	RAIN BIRD RD-12-S-P30-F-R-U U15 SERIES

SYMBOL	DESCRIPTION
	RAIN BIRD PESB-PRS-D ZONE CONTROL VALVES W/ BASELINE BL-5201 (1) STATION BICODER
XX	BASELINE BL-5315B SOIL SENSOR, PLACE ON EITHER SIDE
25 30 35	RAIN BIRD 5006-PL-PC-SAM-R-SS-MPR
	RAIN BIRD 6504-PC, FC-SS-R #14, 59' RADIUS
	PVC CLASS 200 SDR 21 MAINLINE SLEEVE, 12" SIZE
	PVC CLASS 200 SDR 21, 2" WIRE SLEEVING
	PVC CLASS 200 SDR 21, FOR LATERAL LINES, SIZED MINIMUM TWICE THAT OF THE PIPE
	4" IRRIGATION SERVICE LINE: DUCTILE IRON PIPE- CLASS 350
	6" IRRIGATION MAINLINE: PVC CLASS 200 SDR 21
	IRRIGATION LATERAL LINE: PVC CLASS 200 SDR 21

SYMBOL	DESCRIPTION
	8561 4" FLANGED GATE VALVE
M	4" WATER METER
	6" FEBCO 880V REDUCED PRESSURE BACKFLOW PREVENTER
	NETAFIM PHOTO DIODE REGISTER 3-8 (TO FIT 6") MASTER VALVE/FLOW SENSOR
	1" DRAIN VALVE
P	PPS BOOSTER PUMPING SYSTEM
	RAIN BIRD 44-LRC
	LEEMCO LMV-66BB, 6IN. X 6IN. GATE VALVE
A	BASELINE BL-3200P TWO-WIRE CONTROLLER
R	HUNTER RAIN-CLIK RAIN SENSOR
XX	BASELINE BL-LA01 TWO-WIRE SURGE ARRESTOR

VALVE CALLOUT

- # — VALVE NUMBER
- # — VALVE FLOW
- #" — VALVE SIZE
- X — ZONE TYP.

PROPOSED MULCH BED AREAS

- CHRUSHED GRANITE
- STEEL EDGING

Know what's **below.** **Call** before you dig.

CAUTION - NOTICE TO CONTRACTOR

THE CONTRACTOR IS SPECIFICALLY CAUTIONED THAT THE LOCATION AND/OR ELEVATION OF EXISTING UTILITIES AS SHOWN ON THESE PLANS IS BASED ON RECORDS OF THE VARIOUS UTILITY COMPANIES AND, WHERE POSSIBLE, MEASUREMENTS TAKEN IN THE FIELD. THE INFORMATION IS NOT TO BE RELIED ON AS BEING EXACT OR COMPLETE. THE CONTRACTOR MUST CALL THE LOCAL UTILITY LOCATION CENTER AT LEAST 48 HOURS BEFORE ANY EXCAVATION TO REQUEST EXACT FIELD LOCATIONS OF THE UTILITIES. IT SHALL BE THE RESPONSIBILITY OF THE CONTRACTOR TO RELOCATE ALL EXISTING UTILITIES WHICH CONFLICT WITH THE PROPOSED IMPROVEMENTS SHOWN ON THE PLANS.

THE CONTRACTOR SHALL BE RESPONSIBLE FOR ANY DAMAGE TO EXISTING IMPROVEMENTS AND UTILITIES AND SHALL REPAIR ANY DAMAGE AT HIS EXPENSE.

Farnsworth GROUP

5613 DTC PARKWAY, SUITE 1100
GREENWOOD VILLAGE, COLORADO 80111
(303) 692-8838 / info@f-w.com

www.f-w.com
Engineers | Architects | Surveyors | Scientists

ISSUE:

#	DATE:	DESCRIPTION:

PREPARED UNDER THE DIRECT SUPERVISION OF JOSEPH L. WILSON, PLA, CID, CLIA, QWEL, WWLP, COLORADO LICENCE REGISTRATION LA-304

PRELIMINARY
NOT FOR CONSTRUCTION

THESE DRAWINGS AND/OR SPECIFICATIONS ARE BEING ISSUED FOR INFORMATION ONLY. THEY ARE NOT INTENDED TO BE USED FOR FINAL PRICING OR FOR CONSTRUCTION. THEY ARE PRELIMINARY IN NATURE AND ARE SUBJECT TO CHANGE PRIOR TO ISSUANCE OF THE PROJECT CONSTRUCTION DOCUMENTS. ANY PRICING ATTAINED BY THE CONTRACTOR VIA THE USE OF THESE DOCUMENTS IS CONSIDERED TO BE AT THE RISK OF THE CONTRACTOR.

PROJECT:

CITY OF THORNTON
9500 CIVIC CENTER DRIVE
THORNTON, COLORADO 80229

CHERRY PARK IRRIGATION REHABILITATION, PROJECT 22-46B

11500 BIRCH DR,
THORNTON, CO
80233

DATE:	07/11/2025
DESIGNED:	JLW
DRAWN:	JLW
REVIEWED:	JLW
FIELD BOOK NO.:	-

SHEET TITLE:

IRRIGATION PLAN

SHEET NUMBER:

IR1.5

PROJECT NO.: 0231420.00

jgreen | J:\2023\0231420.00 _ Cherry Park Irrigation Rehabilitation\04_drawings\DWG\IR1_Plan _ 0231420.00_20250523.dwg | 7/12/2025 4:03 PM |

IRRIGATION NOTES

1. **CONTRACTOR COMPLIANCE:** CONTRACTOR SHALL COMPLY WITH THESE NOTES AND THE CITY OF THORNTON'S STANDARDS AND SPECIFICATIONS DATED OCTOBER 2012. CITY STANDARDS AND GUIDELINES SHALL TAKE PRECEDENCE OVER THE NOTES BELOW.

2. **DESIGN CLARIFICATION:** THIS DESIGN IS DIAGRAMMATIC. ALL PIPING, VALVES, ETC., SHOWN WITHIN ANY PAVED AREAS ARE FOR DESIGN CLARIFICATION ONLY AND SHALL BE INSTALLED IN LANDSCAPE PLANTING AREAS. SCHEDULE QUANTITIES ARE LISTED FOR CONTRACTOR CONVENIENCE AND BIDDING PURPOSES ONLY. CONTRACTOR IS RESPONSIBLE FOR VERIFYING ALL AREAS AND QUANTITIES REQUIRED TO COMPLETE THE WORK AS SHOWN ON THE PLANS AND DESCRIBED IN THE SPECIFICATIONS AND NOTES. ALL APPLICABLE COSTS SHALL BE INCLUDED IN BID AMOUNTS. WHERE DISCREPANCIES IN QUANTITIES BETWEEN THE PLAN AND SCHEDULE EXIST, THE GRAPHIC PLAN SHALL PREVAIL.

3. **COORDINATION AND VERIFICATION:** IT IS THE RESPONSIBILITY OF THE IRRIGATION CONTRACTOR TO BE FAMILIAR WITH ALL GRADE DIFFERENCES, LOCATIONS OF WALLS, RETAINING WALLS, ETC. THE IRRIGATION CONTRACTOR SHALL COORDINATE THEIR WORK WITH THE GENERAL CONTRACTOR AND OTHER SUBCONTRACTORS FOR THE LOCATION AND INSTALLATION OF PIPE SLEEVES THROUGH WALLS, UNDER ROADWAY PAVING, ETC. ANY WORK COMPLETED PRIOR TO VERIFICATION OR COORDINATION OF EXISTING CONDITIONS SHALL BE THE RESPONSIBILITY OF THE CONTRACTOR AND SHALL INCUR NO COST TO THE CITY.

4. **PLAN MODIFICATIONS:** THE CONTRACTOR SHALL MAKE NO SUBSTITUTIONS, DELETIONS, OR ADDITIONS TO THIS PLAN WITHOUT APPROVAL OF THE CITY/CITY REPRESENTATIVE. THE CONTRACTOR IS RESPONSIBLE FOR NOTIFYING THE OWNER/OWNER'S REPRESENTATIVE OF ANY DISCREPANCIES BETWEEN THE SURVEY AND THE PROPOSED IRRIGATION PLAN.

5. **REGULATORY COMPLIANCE:** ALL CONSTRUCTION SHALL CONFORM TO CITY, COUNTY, STATE, AND FEDERAL REQUIREMENTS AND THE RULES AND REGULATIONS OF THE INTERNATIONAL PLUMBING CODE (IPC). IT SHALL BE THE RESPONSIBILITY OF THE IRRIGATION CONTRACTOR TO ENSURE THAT ALL IRRIGATION EQUIPMENT MEETS GOVERNMENT REGULATIONS. CONTRACTOR SHALL ALSO BE RESPONSIBLE FOR OBTAINING ANY NECESSARY PERMITS OR APPROVALS.

6. **PRESSURE VERIFICATION:** THE IRRIGATION SYSTEM DESIGN IS BASED ON THE MINIMUM OPERATING PRESSURE AND THE MAXIMUM FLOW DEMAND SHOWN ON THE POINT OF CONNECTION NOTE TAG(S) ON THE DRAWINGS. THE IRRIGATION CONTRACTOR SHALL FIELD VERIFY THE STATIC AND OPERATING WATER PRESSURE PRIOR TO CONSTRUCTION AND SHALL REPORT ANY DIFFERENCES BETWEEN THE WATER PRESSURE INDICATED ON THE DRAWINGS AND THE ACTUAL PRESSURE READING AT THE IRRIGATION POINT OF CONNECTION TO THE CITY'S AUTHORIZED REPRESENTATIVE. IN THE EVENT PRESSURE DIFFERENCES ARE NOT REPORTED OR PRESSURES HAVE GREATLY CHANGED PRIOR TO THE START OF THE IRRIGATION SYSTEM CONSTRUCTION, THE IRRIGATION CONTRACTOR SHALL BE RESPONSIBLE FOR RECOMMENDING A SOLUTION AND PROVIDING AN ADD ALTERNATE BID FOR IRRIGATION COSTS.

7. **WATER PRESSURE AND FLOW:** NO MORE THAN 95% OF AVAILABLE MINIMUM STATIC WATER PRESSURE WAS USED IN PREPARATION OF THESE PLANS. FURTHERMORE, THE MAXIMUM FLOW THROUGH THE METER SHOULD NOT EXCEED 75% OF THE MAXIMUM SAFE FLOW.

8. **IRRIGATION SYSTEM INSTALLATION:** CONTRACTOR IS TO INSTALL AN AUTOMATIC IRRIGATION SYSTEM THAT WILL PROVIDE COVERAGE FOR WOODY LANDSCAPE MATERIAL AND SHRUB BED AREAS AS SHOWN ON THESE CONTRACT DRAWINGS.

9. **EXISTING IRRIGATION EQUIPMENT:** REMOVE AND RETAIN ALL EXISTING IRRIGATION HEADS, CONTROL AND QC VALVES, AND BOXES, AND CAP THE SERVICE TEE. MAINLINE AND LATERAL PIPE REMOVAL IS NOT REQUIRED, EXCEPT WHERE EXPOSED AND BROKEN (CUT AND REMOVE TO SOLID PIPE AND PERMANENTLY CAP AT LEAST EIGHT INCHES BELOW GRADE).

10. **MATERIAL AND EQUIPMENT INSTALLATION**: INSTALL ALL MATERIALS AND EQUIPMENT AS SHOWN ON THE PLANS AND DETAILS. NO SUBSTITUTIONS, DELETIONS, OR ADDITIONS OF EQUIPMENT WILL BE ACCEPTABLE WITHOUT PRIOR WRITTEN APPROVAL BY THE OWNER'S REPRESENTATIVE. THE IRRIGATION CONTRACTOR MAY BE REQUIRED TO REMOVE AND REPLACE ALL UNAPPROVED SUBSTITUTED EQUIPMENT AT THEIR OWN COST IF SO DIRECTED BY THE CITY.

11. **SITE ACCESS AND COORDINATION:** ALL ACCESS TO THE SITE, USE OF UTILITIES, STORAGE, AND OTHER REQUIREMENTS SHALL BE COORDINATED PRIOR TO BEGINNING WORK.

12. **UTILITY LOCATION:** LOCATE ALL UNDERGROUND UTILITIES PRIOR TO BEGINNING WORK. CONTRACTOR SHALL COORDINATE WITH ALL OTHER DISCIPLINES ON UTILITY INFORMATION PRIOR TO THE START OF WORK. CONTRACTOR SHALL BE RESPONSIBLE FOR DAMAGE TO UNDERGROUND UTILITIES AND DRAINAGE SYSTEMS CAUSED BY THE INSTALLATION OF THE IRRIGATION SYSTEM.

13. **PIPE INSTALLATION NEAR HARDSCAPE:** WHEN INSTALLING IRRIGATION PIPE AND EQUIPMENT NEXT TO HARDSCAPE (SUCH AS WALLS, CURBS, OR WALKS), PLACE PIPE 3" TO 4" OFF HARDSCAPE TO AVOID CONFLICTS WITH PROPOSED AND EXISTING PLANTING. ANY LATERAL PIPING ABANDONED IN PLACE SHALL BE CUT A MINIMUM OF 10 INCHES BELOW FINISH GRADE. REFER TO LATERAL/MAINLINE TRENCHING DETAIL E FOR ADDITIONAL INFORMATION.

14. **SOD REMOVAL AND REPLACEMENT:** PRIOR TO TRENCHING, REMOVE SOD WITH A SOD CUTTER. ROLL AND SET ASIDE. REPLACE IMMEDIATELY AFTER INSTALLING MAIN AND LATERAL LINES (THREE CALENDAR DAYS MAXIMUM). IT SHALL BE THE RESPONSIBILITY OF THE CONTRACTOR TO FILL AND REPAIR ALL DEPRESSIONS/SETTLING AND REPLACE ALL NECESSARY DAMAGED TURF SOD WITHOUT EXTRA COST TO THE CITY.

15. **PIPE SIZES:** PIPE SIZES SHALL CONFORM TO THOSE SHOWN ON THE DRAWINGS. NO SUBSTITUTIONS OF SMALLER PIPE SIZES SHALL BE PERMITTED, BUT SUBSTITUTIONS OF LARGER SIZES MAY BE APPROVED. ALL DAMAGED AND REJECTED PIPE SHALL BE REMOVED FROM THE SITE AT THE TIME OF SAID REJECTION.

16. **RAIN SENSOR INSTALLATION:** THE RAIN SENSOR SHALL BE LOCATED NEAR THE IRRIGATION CONTROLLER AND SHALL BE MOUNTED AS SHOWN ON THE DETAIL AND/OR LEGEND. LOCATE THE SENSOR AWAY FROM TALL TREES, SHRUBS, AND OTHER POTENTIAL OBSTRUCTIONS. INSTALL A BYPASS SWITCH FOR THE RAIN SENSOR (IF REQUIRED).

17. **ELECTRICAL POWER:** CONTRACTOR IS TO PROVIDE ELECTRICAL POWER TO THE AUTOMATIC CONTROLLER AND COORDINATE WITH THE UTILITY PROVIDER, THE CITY, AND THE CITY'S REPRESENTATIVE ON ELECTRIC METER LOCATION AND SOURCE.

18. **CONTROL WIRE INSTALLATION:** 2-WIRE BICODER CONTROL WIRE SHALL BE 12/2 MAXI CABLE WIRE (OR CITY-APPROVED EQUAL) AND SHALL MEET ALL CONTROLLER MANUFACTURERS' RECOMMENDATIONS. EACH 2-WIRE LEG SHALL BE OF A DIFFERENT AND CONTRASTING COLOR FOR EASE OF IDENTIFICATION. ALL SPLICES SHALL BE PER BASELINE'S SPECIFICATION. WHERE SPLICES MAY BE NECESSARY DUE TO EXCESSIVELY LONG WIRE RUNS, THE CONTRACTOR SHALL MAKE ALL SPLICES IN 6" ROUND VALVE BOXES WITH 3M'S "DBY-DIRECT BURIAL SPLICE KIT". THE CONTRACTOR SHALL LABEL ALL WIRES WITH WATERPROOF TAGS AND MARKERS AT ALL SPLICES AND VALVE MANIFOLDS AND SHALL LEAVE A 24" COIL OF EXCESS WIRE AT EACH CONNECTION. USE SHIELDED WIRE FOR THE FLOW SENSOR AND STANDARD #12 FIELD WIRE FOR THE MASTER VALVE.

19. **LIGHTNING ARRESTOR AND GROUNDING:** INSTALL BASELINE BL-LA01 LIGHTNING ARRESTOR AND GROUND ROD/PLATE WITH G.E.M. AT THE END OF ALL MAINLINE RUNS AND EVERY 600 LF OF CONTROL WIRE PER BASELINE SPECIFICATION. GROUNDING MUST OBTAIN 10 OHMS OF RESISTANCE OR LOWER AS TESTED WITH AN APPROPRIATE EARTH GROUND RESISTANCE TESTER. EARTH GROUND TESTS SHALL BE PERFORMED BY A QUALIFIED TECHNICIAN PROVIDED BY THE CONTROLLER SUPPLIER. REFER TO PLANS FOR RECOMMENDED ARRESTOR/GROUNDING LOCATIONS.

20. **SLEEVING INSTALLATION:** THE IRRIGATION CONTRACTOR SHALL BE RESPONSIBLE FOR INSTALLING ALL CONTROL WIRE SLEEVES AND PIPE SLEEVES UNDER PAVED AREAS PRIOR TO PAVING. ELECTRICAL WIRES FOR IRRIGATION VALVES AND IRRIGATION LINES ARE TO BE PLACED IN SEPARATE SLEEVES. ALL SLEEVING SHALL BE PVC CLASS 200 PIPE. SLEEVES FOR MAINLINE AND LATERAL LINES SHALL BE A MINIMUM OF TWICE THE DIAMETER OF THE ENCLOSED PIPE; SLEEVES FOR CONTROL WIRES SHALL BE AS PER THE IRRIGATION SCHEDULE AS SHOWN ON THESE DRAWINGS. BORE FOR SLEEVES UNDER OBSTRUCTIONS THAT CANNOT BE REMOVED. MARK ALL SLEEVES WITH AN 'X' CHISELED IN HARDSCAPE DIRECTLY OVER THE SLEEVE LOCATION. ALL SLEEVE PIPE OPENINGS SHALL BE DOUBLE WRAPPED WITH 6 MIL POLYETHYLENE PLASTIC AND SECURED USING WIRE "ZIP" TIES AROUND THE SLEEVE AND PIPE.

21. **METALLIC LOCATOR WIRE/TAPE:** PLACE METALLIC LOCATOR WIRE/TAPE 6" ABOVE THE IRRIGATION MAINLINE PRIOR TO BACKFILLING THE TRENCH. LEAVE 6" OF METALLIC WIRE/TAPE VISIBLE IN VALVE BOXES.

22. **TRENCH BACKFILL MATERIAL:** TRENCH BACKFILL MATERIAL SHALL BE FREE OF ROCKS, GLASS, AND OTHER EXTRANEOUS MATERIALS LARGER THAN 1" IN DIAMETER. BACKFILL SHALL BE COMPACTED TO 90% MAXIMUM DRY DENSITY.

23. **VALVE CLUSTERING:** WHERE VALVES ARE LOCATED IN CLOSE PROXIMITY TO EACH OTHER, CLUSTER VALVES INTO MANIFOLDS. INSTALL NO MORE THAN ONE VALVE PER VALVE BOX. ALL UNDERGROUND VALVES SHALL BE INSTALLED IN SUITABLE VALVE BOXES AS SHOWN IN DETAILS, COMPLETE WITH LOCKING COVERS. NO SWING JOINTS FOR THE VALVE ASSEMBLIES. ALL SHALL BE CARSON, ARMOR, OR APPROVED EQUAL, AND SHALL BE LABELED AS SHOWN ON PLANS. CONTRACTOR SHALL USE A BRANDING IRON TYPE TOOL TO IMPRINT VALVE BOX LIDS WITH NUMBERS (CHARACTERS TO BE 2" IN HEIGHT). USE NUMBERING SYSTEM AS SHOWN ON PLAN. ROTOR ZONE CONTROL VALVES SHALL BE INSTALLED WITH EXTRA DEEP JUMBO SERIES RECTANGULAR BOXES.

24. **PIPE AND WIRE CONSOLIDATION:** LATERAL AND MAINLINE PIPE, CONTROL WIRES, AND SLEEVES ARE SHOWN ON CONTRACT DRAWINGS SPACED HORIZONTALLY ON PLAN FOR GRAPHIC CLARITY ONLY. CONTRACTOR SHALL CONSOLIDATE IRRIGATION LATERALS, MAINLINES, AND COMPONENTS WHEREVER POSSIBLE. IRRIGATION PIPING SHALL BE INSTALLED WITH A MINIMUM OF 4 INCHES CLEAR ON ALL SIDES.

25. **VALVE INSTALLATION RESTRICTIONS:** MAINLINE AND CONTROL VALVES SHALL NOT BE INSTALLED AT LOW POINTS OF SLOPES. NO PRESSURIZED MAINLINE OR BELOW GRADE LATERAL LINE SHALL BE INSTALLED WITHIN TEN FEET (10') OF ANY BUILDING FOUNDATION OR OTHER SITE STRUCTURE THAT HAS FOOTINGS INSTALLED BELOW GRADE.

26. **TRENCHING NEAR TREES:** TRENCHING WITHIN THE DRIPLINE OF LARGE EXISTING TREES SHALL BE PERFORMED BY AIR SPADING, AND WITH EXTREME CARE NOT TO SEVER ROOTS 1-1/2" IN DIAMETER AND LARGER. WHERE ROOTS 1-1/2" IN DIAMETER AND LARGER ARE ENCOUNTERED, THE CONTRACTOR SHALL TUNNEL UNDER SAID ROOTS. EXPOSED ROOTS THAT HAVE BEEN TUNNELED UNDER SHALL BE WRAPPED IN WET BURLAP AND KEPT MOIST WHILE THE TRENCH IS OPEN.

27. **PIPE THREAD SEALING:** USE TEFLON TAPE OR TEFLON PIPE DOPE ON ALL MALE PIPE THREADS ON ALL IRRIGATION SWING JOINT AND VALVE ASSEMBLIES.

28. **SPRINKLER HEAD ALIGNMENT:** ALL IRRIGATION HEADS, INCLUDING FIXED-SPRAY, SHALL BE SET PERPENDICULAR TO THE FINISH GRADE OF THE AREA TO BE IRRIGATED.

29. **EQUIPMENT PLACEMENT NEAR FOUNDATIONS:** ALL PRESSURIZED MAINLINES, VALVES, AND ROTOR AND SPRAY HEADS SHALL BE INSTALLED A MINIMUM OF 2' AWAY FROM ANY BUILDING FOUNDATION IF POSSIBLE. IF THIS EQUIPMENT IS SHOWN WITHIN THE 2' OFFSET ON THESE PLANS, IT IS FOR THE PURPOSE OF GRAPHIC CLARITY ONLY.

30. **MAINLINE INSTALLATION:** CONTRACTOR SHALL INSTALL MAINLINES ±12" FROM PAVEMENT EDGE IN PLANTING AREAS. ALL PIPING, VALVES, AND OTHER EQUIPMENT SHOWN WITHIN PAVED AREAS OR OUT OF PROPERTY BOUNDARIES ARE FOR DESIGN CLARIFICATION ONLY AND SHALL BE INSTALLED IN PLANTING AREAS WITHIN THE PROPERTY LINES OR LIMITS AS INDICATED ON THESE PLANS.

31. **SPRINKLER HEAD STAKING:** ALL SPRAY AND ROTOR HEAD LOCATIONS SHALL BE STAKED, FLAGGED, AND/OR OTHERWISE CLEARLY MARKED ON THE GROUND PRIOR TO INSTALLATION. SPRINKLER HEAD STAKING SHALL BE INSPECTED AND APPROVED BY THE CITY/CITY'S REPRESENTATIVE BEFORE INSTALLATION. STAKED LOCATIONS SHALL BE SPACED TO PROVIDE HEAD-TO-HEAD COVERAGE; DISTRIBUTION UNIFORMITY (DU) ON THE SITE SHALL EXCEED 70%.

32. **SPRINKLER HEAD ADJUSTMENT:** FLUSH AND ADJUST ALL SPRINKLER HEADS FOR OPTIMUM PERFORMANCE AND TO PREVENT OVERSPRAY ONTO WALKS, ROADWAYS, AND/OR BUILDINGS AS MUCH AS POSSIBLE. THIS SHALL INCLUDE SELECTING THE BEST NOZZLE ARC AND RADIUS TO FIT THE EXISTING SITE CONDITIONS.

33. **POP-UP SPRINKLER HEAD INSTALLATION:** ALL POP-UP TYPE SPRINKLER HEADS INSTALLED IN TURF AREAS SHALL BE INSTALLED SO THE TOP OF THE SPRINKLER HEAD IS FLUSH WITH THE ADJACENT SIDEWALK OR PAVING. ALL POP-UP HEADS AWAY FROM HARDSCAPE EDGES IN TURF SHALL BE 1" ABOVE THE FINISH GRADE TO PREVENT CONTACT WITH MOWERS.

34. **TREE PROTECTION:** EXISTING TREES TO REMAIN ARE TO BE PROTECTED FROM DAMAGE BEFORE WORK BEGINS. DO NOT TRENCH OR EXCAVATE WITHIN THE CRITICAL ROOT ZONE OF ANY TREE. CONTRACTOR TO PROVIDE TREE PROTECTION FENCING PER CITY'S STANDARDS (REFERENCE SHEET C4.92) WHERE NECESSARY.

35. **MANUFACTURER'S RECOMMENDATIONS:** ALL IRRIGATION EQUIPMENT NOT OTHERWISE DETAILED OR SPECIFIED SHALL BE INSTALLED AS PER MANUFACTURER'S RECOMMENDATIONS AND SPECIFICATIONS.

36. **MAINTENANCE AND OPERATION REQUIREMENTS:** A SEASONAL MAINTENANCE SCHEDULE OF 12 MONTHS SHALL ESTABLISH PROCEDURES FOR OPTIMUM IRRIGATION EFFICIENCY AND PREVENTIVE MAINTENANCE PRACTICES THAT WILL CONSERVE WATER RESOURCES. THE MAINTENANCE SCHEDULE SHOULD INCLUDE THE FOLLOWING ITEMS:
    - VERIFY COVERAGE OF HEADS (BI-MONTHLY)*
    - CHECK FOR BROKEN HEADS OR LEAKAGE (BI-MONTHLY)*
    - REPROGRAM CONTROLLERS ACCORDING TO THE SEASONAL NEEDS (MONTHLY)*
    - VERIFY WATER SUPPLY AND PRESSURE (UPON SYSTEM STARTUP, THEN TWO ADDITIONAL TIMES)
    - INSPECT THE BACKFLOW PREVENTER DEVICE YEARLY UNTIL INITIAL ACCEPTANCE (UPON SYSTEM STARTUP)
    - VERIFY SENSOR FUNCTIONALITY (BI-MONTHLY)*

    **ALL ITEMS SHALL BE PERFORMED UPON SYSTEM STARTUP AND THEN AT A MINIMUM OF THE PERIOD STATED. INSPECTIONS SHALL BE PERFORMED MORE FREQUENTLY AS REQUIRED.* (preceded by *)

37. **POST-INSTALLATION REQUIREMENTS:** UPON COMPLETION OF INSTALLATION OF THE IRRIGATION SYSTEM, THE IRRIGATION CONTRACTOR SHALL PROVIDE THE FOLLOWING:
    - ACCURATE AND COMPLETE "AS-BUILT" PLANS OF THE IRRIGATION SYSTEM INCLUDING 8-1/2" X 11" ZONE MAP TO BE PLACED INSIDE EACH CONTROLLER BOX.
    - BICODER ADDRESS & MODULE NUMBER FOR SOIL MOISTURE SENSORS AND TWO-WIRE PATH INCLUDING GROUNDING RODS & JUNCTION BOXES.
    - LOG ON ALL WATER WINDOWS, RUN SCHEDULE TIMES, AND OTHER CHANGES AND/OR MODIFICATIONS TO THE IRRIGATION SYSTEM SINCE INSTALLATION.
    - ONE HOUR OF TRAINING TO THE OWNER ON IRRIGATION SYSTEM AND CONTROLLER OPERATION.
    - THREE OF EACH TYPE OF HEAD AND EMITTER INSTALLED.
    - ONE OF EACH TYPE OF VALVE INSTALLED.
    - REVIEW WINTERIZATION PROCEDURES FOR THE IRRIGATION SYSTEM WITH THE OWNER'S REPRESENTATIVE.

38. **TAP ABANDONMENT PROCESS:** THE FOLLOWING IS REQUIRED PER CITY OF THORNTON STANDARDS AND SPECIFICATIONS:
    - TRAFFIC PERMIT REQUIRED, INCLUDING DOOR HANGERS AT RESIDENTS' HOMES.
    - REMOVE LINES BACK TO THE TAP IN THE STREET.
    - CAP SERVICE LINES AT LEAST 18" BELOW GRADE.
    - DISABLE CORPORATION STOPS.
    - PROVIDE STREET ASPHALT PAVEMENT CUTS AND EXCAVATION TO METER VAULT AND STREET MAIN.
    - DISCONNECT SERVICE PIPE FROM GATE VALVE AT TAP AND SEAL GATE VALVE WITH A BLIND FLANGE FITTING.
    - REMOVE METER, VALVES, AND PIPE FROM METER VAULT.
    - SEAL PIPE EXIT FROM METER VAULT WITH A BLIND FLANGE FITTING.
    - REMOVE MANHOLE COVER AND RINGS, AND FILL VAULT AND STREET EXCAVATION WITH OWNER-APPROVED FLOW FILL.
    - PROVIDE A 12" DEPTH ASPHALT STREET PATCH.
    - BACKFILL EXCAVATED PARK AREAS AND PROVIDE SOD RESTORATION AS NEEDED.
    - ONCE MAIN IS INSTALLED, A CLEAR WATER TEST IS REQUIRED AFTER DISINFECTION.

39. **INITIAL SYSTEM WINTERIZATION AND START-UP:** THE CONTRACTOR SHALL BE RESPONSIBLE FOR INITIAL SYSTEM WINTERIZATION AND SPRING START-UP FOR THE FIRST YEAR AFTER INITIAL ACCEPTANCE TO ENSURE THE SYSTEM IS OPERATING PROPERLY.

40. **WINTER WATER USE:** WINTER USE OF A WATER TRUCK OR TURN ON/BLOW OUT SYSTEM FOR SUPPLEMENTAL WATER TO BE PAID BY THE CONTRACTOR. UNLESS OTHERWISE SPECIFIED, THE IRRIGATION CONTRACTOR SHALL REPAIR OR REPLACE ANYTHING DAMAGED BY THE CONTRACTOR'S WORK AT NO ADDITIONAL COST TO THE OWNER.

41. **INSPECTION AND PRESSURE TESTING:** PER CITY OF THORNTON STANDARDS AND SPECIFICATIONS, THE DEPTH OF ALL JOINTS, MANUAL DRAIN VALVES, SUMPS, CONTROL VALVES, AND SOLVENT WELDS SHALL BE INSPECTED FOR CONFORMANCE TO THE DRAWINGS AND THE CITY'S STANDARDS AND SPECIFICATIONS BEFORE THEY ARE BURIED. A PRESSURE TEST SHALL BE CONDUCTED AT 120 PSI OR 40 PSI OVER STATIC PRESSURE, WHICHEVER IS GREATER, FOR A PERIOD OF TWO (2) HOURS TO ENSURE THAT THE SYSTEM IS WATERTIGHT.

42. **IRRIGATION AUDIT:** AN IRRIGATION AUDIT OF 2-5% OF SPECIFIC ZONES AS DIRECTED BY THE CITY AND PERFORMED BY A CERTIFIED LANDSCAPE IRRIGATION AUDITOR FOLLOWING IRRIGATION ASSOCIATION GUIDELINES IS REQUIRED, CONFIRMING SCHEDULING COEFFICIENT OF NO GREATER THAN 1.2 (70% MINIMUM DU). THE IRRIGATION AUDIT IS TO BE PAID BY THE CONTRACTOR FOR THIRD PARTY, CONDUCTED BY THE CONTRACTOR IN THE PRESENCE OF THE IRRIGATION DESIGNER AND CITY, WITH RESULTS EVALUATED BY THE IRRIGATION DESIGNER, WILL BE REQUIRED BEFORE THE TIME OF THE INITIAL ACCEPTANCE WALK THROUGH. GROUNDING TEST OF THE 2-WIRE SYSTEM WILL BE REQUIRED DURING THIS TIME AS WELL.

IRRIGATION SCHEDULE

SYMBOL	MANUFACTURER/MODEL/DESCRIPTION	QTY	PSI	DETAIL
EST LCS RCS CST SST	RAIN BIRD RD-06-S-P30-F-R-U 15 STRIP SERIES TURF SPRAY, 6IN. POP-UP, WITH 30 PSI IN-STEM PRESSURE REGULATION, SEAL-A-MATIC CHECK VALVE, AND FLOW-SHIELD TECHNOLOGY. 1/2IN. NPT FEMALE THREADED INLET.	3	30	B / IR2.3
Q T H F	RAIN BIRD RD-06-S-P30-F-R-U U8 SERIES TURF SPRAY, 6IN. POP-UP, WITH 30 PSI IN-STEM PRESSURE REGULATION, SEAL-A-MATIC CHECK VALVE, AND FLOW-SHIELD TECHNOLOGY. 1/2IN. NPT FEMALE THREADED INLET.	61	30	B / IR2.3
Q T H F	RAIN BIRD RD-06-S-P30-F-R-U U10 SERIES TURF SPRAY, 6IN. POP-UP, WITH 30 PSI IN-STEM PRESSURE REGULATION, SEAL-A-MATIC CHECK VALVE, AND FLOW-SHIELD TECHNOLOGY. 1/2IN. NPT FEMALE THREADED INLET.	19	30	B / IR2.3
Q T H TT TQ F	RAIN BIRD RD-06-S-P30-F-R-U U12 SERIES TURF SPRAY, 6IN. POP-UP, WITH 30 PSI IN-STEM PRESSURE REGULATION, SEAL-A-MATIC CHECK VALVE, AND FLOW-SHIELD TECHNOLOGY. 1/2IN. NPT FEMALE THREADED INLET.	34	30	B / IR2.3
Q T H TT TQ F	RAIN BIRD RD-06-S-P30-F-R-U U15 SERIES TURF SPRAY, 6IN. POP-UP, WITH 30 PSI IN-STEM PRESSURE REGULATION, SEAL-A-MATIC CHECK VALVE, AND FLOW-SHIELD TECHNOLOGY. 1/2IN. NPT FEMALE THREADED INLET.	73	30	B / IR2.3
EST LCS RCS CST SST	RAIN BIRD RD-12-S-P30-F-R-U 15 STRIP SERIES 12IN. POP-UP, WITH 30 PSI IN-STEM PRESSURE REGULATION, SEAL-A-MATIC CHECK VALVE, AND FLOW-SHIELD TECHNOLOGY. 1/2IN. NPT FEMALE THREADED INLET.	5	30	B / IR2.3
Q T H F	RAIN BIRD RD-12-S-P30-F-R-U U8 SERIES 12IN. POP-UP, WITH 30 PSI IN-STEM PRESSURE REGULATION, SEAL-A-MATIC CHECK VALVE, AND FLOW-SHIELD TECHNOLOGY. 1/2IN. NPT FEMALE THREADED INLET.	12	30	B / IR2.3
Q T H F	RAIN BIRD RD-12-S-P30-F-R-U U10 SERIES 12IN. POP-UP, WITH 30 PSI IN-STEM PRESSURE REGULATION, SEAL-A-MATIC CHECK VALVE, AND FLOW-SHIELD TECHNOLOGY. 1/2IN. NPT FEMALE THREADED INLET.	2	30	B / IR2.3
Q T H TT TQ F	RAIN BIRD RD-12-S-P30-F-R-U U12 SERIES 12IN. POP-UP, WITH 30 PSI IN-STEM PRESSURE REGULATION, SEAL-A-MATIC CHECK VALVE, AND FLOW-SHIELD TECHNOLOGY. 1/2IN. NPT FEMALE THREADED INLET.	6	30	B / IR2.3
Q T H TT TQ F	RAIN BIRD RD-12-S-P30-F-R-U U15 SERIES 12IN. POP-UP, WITH 30 PSI IN-STEM PRESSURE REGULATION, SEAL-A-MATIC CHECK VALVE, AND FLOW-SHIELD TECHNOLOGY. 1/2IN. NPT FEMALE THREADED INLET.	184	30	B / IR2.3

SYMBOL	MANUFACTURER/MODEL/DESCRIPTION	QTY	PSI	DETAIL
25 30 35	RAIN BIRD 5006-PL-PC-SAM-R-SS-MPR, 25-35 RADIUS TURF ROTOR, 6IN. POP-UP, STAINLESS STEEL RISER, WITH FLOW SHUT-OFF DEVICE. MATCHED PRECIPITATION ROTOR (MPR NOZZLE), ARC AND RADIUS AS PER SYMBOL. 25 FT=RED, 30 FT=GREEN, 35FT=BEIGE. WITH SEAL-A-MATIC CHECK VALVE, AND IN-STEM PRESSURE REGULATOR.	294	45	A / IR2.3
	RAIN BIRD 6504-PC, FC-SS-R #14, 59' RADIUS, 2.7 GPMS TURF ROTOR, 4IN. POP-UP, STAINLESS STEEL RISER, ADJUSTABLE AND FULL CIRCLE. WITH REMOVABLE SEAL-A-MATIC CHECK VALVE, 1IN. FEMALE THREADED INLET.	372	50	A / IR2.3

SYMBOL	MANUFACTURER/MODEL/DESCRIPTION	QTY	DETAIL
	PIPE SLEEVE: PVC CLASS 200 SDR 21 MAINLINE SLEEVE, 12" SIZE. EXTEND SLEEVE ENDS SIX (6) INCHES BEYOND EDGE OF ALL PAVED SURFACES. BORE FOR SLEEVES UNDER EXISTING OBSTRUCTIONS.	153.9 L.F.	E / IR2.3
	PIPE SLEEVE: PVC CLASS 200 SDR 21 2" WIRE SLEEVING. EXTEND SLEEVE ENDS SIX (6) INCHES BEYOND EDGE OF ALL PAVED SURFACES. BORE FOR SLEEVES UNDER EXISTING OBSTRUCTIONS.	148.7 L.F.	E / IR2.3

VALVE CALLOUT

- # — VALVE NUMBER
- # — VALVE FLOW
- #" — VALVE SIZE
- X — ZONE TYP.

PROPOSED MULCH BED AREAS

CHRUSHED GRANITE 510 S.F. P / IR2.5		P / IR2.5
14 GAUGE ROLLED TOP STEEL EDGING, GREEN IN COLOR 185 L.F. P / IR2.5		P / IR2.5

SYMBOL	MANUFACTURER/MODEL/DESCRIPTION	QTY	DETAIL
	8561 4" FLANGED GATE VALVE 4" AWWA C509 RESILIENT WEDGE GATE VALVE (KENNEDY OR APPROVED EQUAL) PER CITY OF THORNTON STANDARDS AND SPECIFICATIONS	1	J / IR2.4
M	WATER METER 4" INSTALL PER CITY OF THORNTON'S STANDARDS AND SPECIFICATIONS , GIS ADDRESS: 11592.5 BIRCH DRIVE - HGL HIGH=5375, HGL LOW 5351 = 59.2 PSI PRESSURE AVAILABLE	1	I / IR2.4
	FEBCO 880V 6" REDUCED PRESSURE BACKFLOW PREVENTER INSTALLED ADJACENT TO PUMP ENCLOSURE WITHIN AN STRONGBOX SMOOTH-TOUCH BY V.I.T. OR EQUAL ENCLOSURE	1	J / IR2.4
	NETAFIM PHOTO DIODE REGISTER 3-8 (TO FIT 6") 3IN. TO 8IN. MASTER VALVE/FLOW SENSOR WITH WATER METER AND HYDRAULIC VALVE IN A SINGLE UNIT. CAST IRON WITH BAKED POWDER-COATED FINISH, MINIMUM WORKING PRESSURE 14 PSI. FLANGE CONNECTION, PHOTO DIODE REGISTER, HIGH FREQUENCY	1	J / IR2.4
	1" DRAIN VALVE-MATCO-NORCA 512T05 BRASS STOP VALVE WITH CROSS HANDLE, 1" AT P.O.C.AND ALL LOW POINTS OF MAINLINE FOR WINTERIZATION.	1	H / IR2.3
P	PPS PUMPING SYSTEM CB##V2C010A00338-054XXXB203ONS-6 W/ WINTER PACKAGE AND SUPPLIER'S EXTENDED WARRANTY, BOOST 54 PSI. CUSTOM PUMP AND HOUSING PER CITY OF THORNTON'S SPECIFICATIONS, SEE DETAIL.	1	R / IR2.5
	RAIN BIRD 44-LRC 1IN. BRASS QUICK-COUPLING VALVE, WITH CORROSION-RESISTANT STAINLESS STEEL SPRING, LOCKING THERMOPLASTIC RUBBER COVER, AND 2-PIECE BODY	23	D / IR2.3
	LEEMCO LMV-66BB 6IN. X 6IN. LMV-BB SERIES MAINLINE GATE VALVE. THE BELL X BELL VERSION PROVIDES IN-LINE ISOLATION	24	Q / IR2.5
A	BASELINE BL-3200P TWO-WIRE CONTROLLER WITH CELLULAR MODEM, ANTENNA KIT, HEAVY-DUTY LIGHTNING/SURGE PROTECTION, BATTERY BACK-UP IN 16-GAUGE STAINLESS-STEEL PEDESTAL ENCLOSURE, EXPANDABLE UP TO 200 STATIONS. CONTRACTOR TO COORDINATE AN ANTENNA CHECK WITH THE MANUFACTURER. CONTRACTOR TO COORDINATE WITH THE CITY FOR THE CITY'S SPECIFIC CELLULAR MODEM PLAN.	1	N / IR2.4 O / IR2.5
®	HUNTER RAIN-CLIK WIRED RAIN SENSOR, WITH CONDUIT INSTALLATION, MOUNT AS DETAILED. NORMALLY CLOSED SWITCH.	1	G / IR2.3
XX	BASELINE BL-5315B INCLUDES COMMERCIAL BISENSOR WITH INSTALLATION GUIDE, 50FT. CONNECTION WIRES PLUS DBR/Y-6 CONNECTORS (TWO-WIRE SIDE ONLY) AND WIRE NUTS. MARK SENSORS WITH BASE ANCHOR MARKERS (PLEEFIX BRAND OR EQUAL)	7	K / IR2.4
XX	BASELINE BL-LA01 BASELINE TWO-WIRE SURGE ARRESTOR, LOCATE PER CITY OF THORNTON STANDARDS AND SPECIFICATIONS	16	C / IR2.3
	RAIN BIRD PESB-PRS-D 1IN., 1-1/2IN., 2IN. PLASTIC INDUSTRIAL SMART VALVES W/ BASELINE BL-5201 (1) STATION BICODER. LOW FLOW OPERATING CAPABILITY, GLOBE CONFIGURATION. WITH SCRUBBER TECHNOLOGY FOR RELIABLE PERFORMANCE IN DIRTY WATER IRRIGATION APPLICATIONS AND A FACTORY INSTALLED PRESSURE REGULATOR MODULE	119	C / IR2.3

SYMBOL	MANUFACTURER/MODEL/DESCRIPTION	QTY	DETAIL
	4" IRRIGATION SERVICE LINE: DUCTILE IRON PIPE-CLASS 350, TAP TO METER PIPE PER LOCAL WATER PURVEYOR`S REQ.	38.8 L.F.	E / IR2.3 S / IR2.5
	6" IRRIGATION MAINLINE: PVC CLASS 200 SDR 21 USE RING-TIGHT, RUBBER-GASKETED PIPE AND LEEMCO RESTRAINED FITTINGS, INCLUDE THRUST BLOCKS PER CITY OF THORNTON STANDARDS AND SPECIFICATIONS	6,658 L.F.	E,F / IR2.3
	IRRIGATION LATERAL LINE: PVC CLASS 200 SDR 21 USE RING-TIGHT, RUBBER-GASKETED PIPE AND LEEMCO RESTRAINED FITTINGS, SIZE PER PLANS, USE 1" UNLESS OTHERWISE DELINEATED.	39,665 L.F.	E / IR2.3
	PIPE SLEEVE: PVC CLASS 200 SDR 21 FOR LATERAL LINES, SIZED MINIMUM TWICE THAT OF THE PIPE. EXTEND SLEEVE ENDS SIX (6) INCHES BEYOND EDGE OF ALL PAVED SURFACES. BORE FOR SLEEVES UNDER EXISTING OBSTRUCTIONS	332.4 L.F.	E / IR2.3
NOT SHOWN	2-WIRE BICODER CONTROL WIRE SHALL BE 12/2 MAXI CABLE WIRE, #14 AWG YELLOW TRACER, OR CITY APPROVED EQUAL) AND SHALL MEET ALL CONTROLLER MANUFACTURERS RECOMMENDATIONS. DO NOT LOOP 2-WIRE PATH.	7,453 L.F.	L,M / IR2.4

Farnsworth GROUP
5613 DTC PARKWAY, SUITE 1100
GREENWOOD VILLAGE, COLORADO 80111
(303) 692-8838 / info@f-w.com
www.f-w.com
Engineers | Architects | Surveyors | Scientists

ISSUE:

#	DATE:	DESCRIPTION:

PREPARED UNDER THE DIRECT SUPERVISION OF JOSEPH L. WILSON, PLA, CID, CLIA, QWEL, WWLP, COLORADO LICENCE REGISTRATION LA-304

PRELIMINARY
NOT FOR CONSTRUCTION
THESE DRAWINGS AND/OR SPECIFICATIONS ARE BEING ISSUED FOR INFORMATION ONLY. THEY ARE NOT INTENDED TO BE USED FOR FINAL PRICING OR FOR CONSTRUCTION. THEY ARE PRELIMINARY IN NATURE AND ARE SUBJECT TO CHANGE PRIOR TO ISSUANCE OF THE PROJECT CONSTRUCTION DOCUMENTS. ANY PRICING ATTAINED BY THE CONTRACTOR VIA THE USE OF THESE DOCUMENTS IS CONSIDERED TO BE AT THE RISK OF THE CONTRACTOR.

PROJECT:

CITY OF THORNTON
9500 CIVIC CENTER DRIVE
THORNTON, COLORADO 80229

CHERRY PARK IRRIGATION REHABILITATION, PROJECT 22-46B

11500 BIRCH DR,
THORNTON, CO
80233

DATE:	07/11/2025
DESIGNED:	JLW
DRAWN:	JLW
REVIEWED:	JLW
FIELD BOOK NO.:	-

SHEET TITLE:

IRRIGATION LEGEND AND NOTES

SHEET NUMBER:

IR2.1

PROJECT NO.: 0231420.00

ggreen | J:\2023\0231420.00 – Cherry Park Irrigation Rehabilitation\04_drawings\DWG\IR1_Plan – 0231420.00_20250523.dwg | 1/12/2026 4:03 PM |

| ggreen | J:\2023\0231420.00\04_drawings\DWG\IR1_Plan – 0231420.00_20250523.dwg | 1/12/2026 4:03 PM |

CONTROLLER CHART A (CURRENT 2024 CONDITION)

ZONE #	VALVE SIZE	PLANT TYPE	ZONE TYPE	ZONE FLOW GPM	# OF HEADS	PRECIP. RATE In/h	PEAK INCHES PER WK	WEEKLY RUN TIME MINUTES	WATER USAGE GAL. PER WEEK	PSI DESIGN OPERATING PRESSURE	FRICTION LOSS	PSI	PSI AT THE POINT-OF-CONNECTION
A1	1-1/2"	TURF	ROTORS	63.5	5	0.85	1.50	105.9	6,723.5	50	4.3	62.3	78
A2	1-1/2"	TURF	ROTORS	63.5	5	0.36	1.50	250.0	15,875.0	50	3.7	60.4	76
A3	2"	TURF	ROTORS	63.5	5	2.31	1.50	39.0	2,474.0	50	9.68	69.1	84
A4	1-1/2"	TURF	ROTORS	63.5	5	0.78	1.50	115.4	7,326.9	50	6.56	65.5	80
A5	1-1/2"	TURF	ROTORS	50.8	4	0.35	1.50	257.1	13,062.9	50	5.79	62.5	78
A6	1-1/2"	TURF	ROTORS	63.5	5	0.39	1.50	230.8	14,653.8	50	4.61	61.8	77
A7	1-1/2"	TURF	ROTORS	63.5	5	0.63	1.50	142.9	9,071.4	50	4.5	61.2	76
A8	1-1/2"	TURF	ROTORS	63.5	5	0.92	1.50	97.8	6,212.0	50	3.27	58.7	73
A9	1-1/2"	TURF	ROTORS	63.5	5	0.45	1.50	200.0	12,700.0	50	3.13	59	74
A10	1-1/2"	TURF	ROTORS	63.5	5	0.83	1.50	108.4	6,885.5	50	3.85	60.6	72
A11	1-1/2"	TURF	ROTORS	63.5	5	0.35	1.50	257.1	16,328.6	50	4.38	60.7	72
A12	1-1/2"	TURF	ROTORS	50.8	4	0.68	1.50	132.4	6,723.5	50	6.82	62.6	74
A13	1-1/2"	TURF	ROTORS	63.5	5	0.42	1.50	214.3	13,607.1	50	4.73	61	72
A14	1-1/2"	TURF	ROTORS	63.5	5	2.4	1.50	37.5	2,381.3	50	9.27	68.2	78
A15	1-1/2"	TURF	ROTORS	50.8	4	0.39	1.50	230.8	11,723.1	50	4.2	60.9	71
A16	1-1/2"	TURF	ROTORS	63.5	5	0.39	1.50	230.8	14,653.8	50	4.5	61.7	71
A17	1-1/2"	TURF	ROTORS	63.5	5	0.94	1.50	95.7	6,079.8	50	6.09	63.7	73
A18	1-1/2"	TURF	ROTORS	63.5	5	0.88	1.50	102.3	6,494.3	50	2.67	59	69
A19	1-1/2"	TURF	ROTORS	62.48	22	0.86	1.50	104.7	6,540.7	45	4.71	58.1	76
A20	1-1/2"	TURF	ROTORS	63.5	5	0.85	1.50	105.9	6,723.5	50	3.66	59.1	76
A21	1-1/2"	TURF	ROTORS	63.5	5	0.41	1.50	219.5	13,939.0	50	2.67	59	76
A22	1-1/2"	TURF	ROTORS	50.8	4	0.54	1.50	166.7	8,466.7	50	1.92	55.6	73
A23	1-1/2"	TURF	ROTORS	63.5	5	0.81	1.50	111.1	7,055.6	50	3.78	60.1	77
A24	1-1/2"	TURF	ROTORS	62.72	23	0.86	1.50	104.7	6,561.6	45	2.15	52.1	68
A25	1-1/2"	TURF	ROTORS	53.4	19	0.82	1.50	109.8	5,861.0	45	2.65	53.7	69
A26	1-1/2"	TURF	ROTORS	63.5	5	0.86	1.50	104.7	6,645.3	50	2.45	59.2	73
A27	1-1/2"	TURF	ROTORS	63.5	5	0.91	1.50	98.9	6,280.2	50	2.42	57.9	72
A28	1-1/2"	TURF	ROTORS	61.06	13	0.65	1.50	138.5	8,460.0	45	2.93	54.5	68
A29	1-1/2"	TURF	ROTORS	55.55	20	0.93	1.50	96.8	5,380.6	45	2.65	53.8	67
A30	1-1/2"	TURF	ROTORS	68.31	21	0.72	1.50	125.0	8,537.5	45	3.15	53.5	67
A31	1-1/2"	TURF	ROTORS	38.1	3	0.5	1.50	180.0	6,858.0	50	2.39	55.9	67
A32	1-1/2"	TURF	ROTORS	63.5	5	0.83	1.50	108.4	6,885.5	50	2.65	58.5	69
A33	1-1/2"	TURF	ROTORS	50.8	4	1.88	1.50	47.9	2,431.9	50	5.53	59.2	70
A34	1-1/2"	TURF	ROTORS	50.8	4	0.58	1.50	155.2	7,882.8	50	3.07	56.3	67
A35	1-1/2"	TURF	ROTORS	50.8	4	0.86	1.50	104.7	5,316.3	50	2.61	57.6	68
A36	1-1/2"	TURF	ROTORS	50.8	4	0.36	1.50	250.0	12,700.0	50	1.67	56.2	67
A37	1-1/2"	TURF	ROTORS	50.8	4	0.84	1.50	107.1	5,442.9	50	2.63	56.3	67
A38	1-1/2"	TURF	ROTORS	50.8	4	0.38	1.50	236.8	12,031.6	50	2.12	57.1	65
A39	1-1/2"	TURF	ROTORS	50.8	4	0.36	1.50	250.0	12,700.0	50	2.02	56.5	64
A40	1-1/2"	TURF	ROTORS	63.5	5	0.99	1.50	90.9	5,772.7	50	3.15	57.3	65
A41	1-1/2"	TURF	ROTORS	63.5	5	0.83	1.50	108.4	6,885.5	50	2.9	59.6	66
A42	1-1/2"	TURF	ROTORS	38.1	3	2.85	1.50	31.6	1,203.2	50	1.06	54.6	61
A43	1-1/2"	TURF	ROTORS	63.5	5	0.91	1.50	98.9	6,280.2	50	3.13	59.9	66
A44	1-1/2"	TURF	ROTORS	50.8	4	1.61	1.50	55.9	2,839.8	50	3.46	58	64
A45	1-1/2"	TURF	ROTORS	63.5	5	1.04	1.50	86.5	5,495.2	50	2.02	57.5	64
A46	1-1/2"	TURF	ROTORS	38.1	3	0.6	1.50	150.0	5,715.0	50	2.64	57.9	65
A47	1-1/2"	TURF	ROTORS	50.8	4	0.58	1.50	155.2	7,882.8	50	3.92	59.7	67
A48	1-1/2"	TURF	ROTORS	63.32	22	0.74	1.50	121.6	7,698.6	45	2.68	53.1	62
A49	1-1/2"	TURF	ROTORS	50.8	4	0.51	1.50	176.5	8,964.7	50	2.68	56.3	65
A50	1-1/2"	TURF	ROTORS	50.8	4	1.19	1.50	75.6	3,842.0	50	1.86	56	65
A51	1-1/2"	TURF	ROTORS	63.5	5	0.81	1.50	111.1	7,055.6	50	2.22	58.1	68
A52	1-1/2"	TURF	ROTORS	63.57	18	0.73	1.50	123.3	7,841.1	45	3.2	54.1	64
A53	1-1/2"	TURF	ROTORS	45.55	13	0.65	1.50	138.5	6,313.8	45	2.31	52.6	63
A54	1-1/2"	TURF	ROTORS	63.5	5	0.88	1.50	102.3	6,494.3	50	2.16	57.6	69
A55	1-1/2"	TURF	ROTORS	63.5	5	0.76	1.50	118.4	7,519.7	50	2.67	59	72
A56	1-1/2"	TURF	ROTORS	25.4	2	0.51	1.50	176.5	4,482.4	50	1.4	56.9	70
A57	1-1/2"	TURF	ROTORS	63.5	5	0.79	1.50	113.9	7,234.2	50	2.68	57.7	74
A58	1-1/2"	TURF	ROTORS	63.5	5	0.84	1.50	107.1	6,803.6	50	3.12	58.1	74
A59	1-1/2"	TURF	ROTORS	63.5	5	1.33	1.50	67.7	4,297.0	50	3.44	59.8	77
A60	1-1/2"	TURF	ROTORS	25.4	2	0.56	1.50	160.7	4,082.1	50	8.95	64.9	82
A61	1"	TURF	ROTORS	15.33	5	0.65	1.50	138.5	2,118.5	45	2.15	49.5	73
A62	1-1/2"	TURF	ROTORS	63.5	5	0.65	1.50	138.5	8,792.3	50	2.32	57.3	78
A63	1-1/2"	TURF	ROTORS	63.5	5	1.15	1.50	78.3	4,969.6	50	4.34	62.4	83
A64	1-1/2"	TURF	ROTORS	20.32	8	1	1.50	90.0	5,715.0	45	2.93	51.8	76
A65	1-1/2"	TURF	ROTORS	63.5	5	0.51	1.50	176.5	11,205.9	50	4.11	57	81
A66	1-1/2"	TURF	ROTORS	26.6	9	0.95	1.50	94.7	6,015.8	45	3.96	53.5	78
A67	1-1/2"	TURF	ROTORS	45.91	21	0.92	1.50	97.8	4,969.6	45	5.13	52.8	77
A68	1-1/2"	TURF	ROTORS	66.84	22	0.78	1.50	115.4	886.2	45	2.78	53.9	78
A69	1-1/2"	TURF	ROTORS	63.74	20	0.72	1.50	125.0	5,737.5	45	1.8	52.7	76
A70	1-1/2"	TURF	ROTORS	69.32	19	0.89	1.50	101.1	1,122.5	45	6.98	57.4	81
A71	1-1/2"	TURF	ROTORS	63.5	5	0.82	1.50	109.8	6,135.4	50	3.41	60.1	82
A72	1-1/2"	TURF	ROTORS	63.5	5	0.93	1.50	96.8	6,145.2	50	2.77	59.5	80
A73	1-1/2"	TURF	ROTORS	50.8	4	0.39	1.50	230.8	3,992.3	50	3.22	60.3	80
A74	1"	TURF	TURF SPRAY	7.68	9	1.31	1.50	68.7	2,171.0	30	1.25	34.7	52
A75	1-1/2"	TURF	TURF SPRAY	45.93	21	1.58	1.50	57.0	1,162.0	30	5.41	41.6	57
A76	1"	TURF	TURF SPRAY	11.07	10	1.51	1.50	59.6	196.7	30	1.19	33.5	47
A77	1-1/2"	TURF	TURF SPRAY	55.87	77	1.75	1.50	51.4	2,098.3	30	2.99	38.3	49
A78	1-1/2"	TURF	TURF SPRAY	63.49	32	1.03	1.50	87.4	3,486.4	30	3.13	37.7	48
A79	1-1/2"	TURF	TURF SPRAY	17.31	9	0.88	1.50	102.3	2,597.7	30	1.11	35	46
A80	1-1/2"	TURF	TURF SPRAY	31.62	18	1.28	1.50	70.3	3,571.9	30	2.44	35.6	42
A81	1-1/2"	TURF	TURF SPRAY	16.95	14	1.7	1.50	52.9	3,361.8	30	1.51	36.3	45
A82	1-1/2"	TURF	TURF SPRAY	7.53	11	1.62	1.50	55.6	3,527.8	30	0.41	34.7	58
A83	1"	TURF	SHRUB SPRAY	3.3	8	1.35	0.90	40.0	2,540.0	30	0.12	32.9	48
A84	1-1/2"	TURF	SHRUB SPRAY	40.82	22	1.41	0.90	38.3	2,431.9	30	1.18	36	47
A85	1-1/2"	TURF	SHRUB SPRAY	39.85	20	1.52	0.90	35.5	2,255.9	30	2.56	36.1	47
A86	1-1/2"	TURF	ROTORS	25.4	2	0.97	1.50	92.8	3,535.1	50	1.5	55.7	62
A87	1-1/2"	TURF	ROTORS	50.8	4	2.2	1.50	40.9	2,110.9	50	2.66	56.8	63
A88	1-1/2"	TURF	ROTORS	63.5	5	0.9	1.50	100.0	6,350.0	50	3.15	58.1	64
A89	1-1/2"	TURF	ROTORS	63.5	5	0.58	1.50	155.2	9,853.4	50	2	56.6	63
A90	1-1/2"	TURF	ROTORS	63.5	5	0.58	1.50	155.2	7,262.1	50	1.73	57.2	62
A91	1-1/2"	TURF	ROTORS	63.5	5	0.97	1.50	92.8	6,429.9	50	2.49	57.1	62
A92	1-1/2"	TURF	ROTORS	63.5	5	0.95	1.50	94.7	2,756.8	50	2.34	58.2	63
A93	1-1/2"	TURF	ROTORS	38.1	3	0.56	1.50	160.7	3,246.4	50	1.98	55.5	60
A94	1-1/2"	TURF	ROTORS	51.64	8	0.68	1.50	132.4	8,841.2	45	2.88	51.2	55
A95	1-1/2"	TURF	ROTORS	63.5	5	1.12	1.50	80.4	4,082.1	50	2.62	56.8	61
A96	1-1/2"	TURF	ROTORS	63.5	5	1.3	1.50	69.2	4,396.2	50	1.77	56.8	61
A97	1-1/2"	TURF	ROTORS	46.75	11	0.64	1.50	140.6	8,929.7	45	4.96	53.1	56
A98	1-1/2"	NATIVE	ROTORS	63.5	5	2.18	0.70	19.3	1,223.4	50	2.54	58.9	82
A99	1-1/2"	NATIVE	ROTORS	63.5	5	0.49	0.70	85.7	4,354.3	50	1.78	55.1	80
A100	1-1/2"	NATIVE	ROTORS	63.5	5	1.16	0.70	36.2	2,299.1	50	2.61	57.2	83
A101	1-1/2"	NATIVE	ROTORS	63.5	5	0.89	0.70	47.2	2,397.3	50	1.93	57.8	82
A102	1-1/2"	NATIVE	ROTORS	50.8	4	0.44	0.70	95.5	6,061.4	50	3.4	57.5	81
A103	1-1/2"	NATIVE	ROTORS	63.5	5	0.92	0.70	45.7	1,739.3	50	3.06	59.4	83
A104	1-1/2"	NATIVE	ROTORS	50.8	4	1.69	0.70	24.9	1,488.6	50	2.72	56.8	83
A105	1-1/2"	NATIVE	ROTORS	63.5	5	1.18	0.70	35.6	268.0	50	3.42	57.1	80
A106	1-1/2"	NATIVE	ROTORS	38.1	3	0.56	0.70	75.0	1,522.5	50	2.22	54.9	78
A107	1-1/2"	NATIVE	TREE ROTORS	50.8	4	1.02	0.90	52.9	1,852.9	50	4.52	57.3	82
A108	1-1/2"	NATIVE	TREE ROTORS	38.1	3	2.24	0.90	24.1	1,224.6	50	2.53	58.2	82
A109	1-1/2"	NATIVE	TREE ROTORS	63.5	5	0.79	0.90	68.4	2,604.3	50	3.55	61.2	84
A110	1-1/2"	NATIVE	TREE ROTORS	63.5	5	2.53	0.90	21.3	1,355.3	50	6.75	59.2	85
A111	1-1/2"	NATIVE	TREE ROTORS	38.1	3	0.36	0.90	150.0	9,525.0	50	2.89	55.1	81
A112	1-1/2"	NATIVE	TREE ROTORS	63.5	5	0.78	0.90	69.2	2,637.7	50	3.22	57.4	83
A113	1-1/2"	NATIVE	TREE ROTORS	63.5	5	0.78	0.90	69.2	4,396.2	50	5.01	59.1	83
A114	1-1/2"	NATIVE	TREE SPRAY	0	18	0	0.00	0.0	0.0	30	0.00	0.00	0.00
A115	1-1/2"	NATIVE	TREE SPRAY	0	17	0	0.00	0.0	0.0	30	0.00	0.00	0.00
A116	1-1/2"	NATIVE	TREE SPRAY	0	32	0	0.00	0.0	0.0	30	0.00	0.00	0.00
A117	1-1/2"	NATIVE	TREE SPRAY	0	37	0	0.00	0.0	0.0	30	0.00	0.00	0.00
A118	1-1/2"	NATIVE	TREE SPRAY	0	33	0	0.00	0.0	0.0	30	0.00	0.00	0.00
A119	1-1/2"	NATIVE	TREE SPRAY	0	11	0	0.00	0.0	0.0	30	0.00	0.00	0.00

PROJECTED PEAK SEASON (JULY/AUGUST) WATER USE PER WEEK **670,331.6** **Gallons** GALLONS PER MONTH =2,681,326
PEAK SEASON HOURS PER WEEK **211.5** **Hours**
REQUIRED NUMBER DAYS PER WEEK **6** **Days**
REQUIRED NUMBER HOURS A DAY **8** **Hours**

PROPOSED PROGRAMING CHECK

OVER	**6**	**Days**
RUNNING	**5**	**Stations at a Time** (max +/-318 Gal Flow)
AT	**7.1**	**Hours a Day**

CONTROLLER CHART A (NATURALLY THORNTON)

ZONE #	VALVE SIZE	PLANT TYPE	ZONE TYPE	ZONE FLOW GPM	# OF HEADS	PRECIP. RATE In/h	PEAK INCHES PER WK	WEEKLY RUN TIME MINUTES	WATER USAGE GAL. PER WEEK	PSI DESIGN OPERATING PRESSURE	FRICTION LOSS	PSI	PSI AT THE POINT-OF-CONNECTION
A1	1-1/2"	TURF	ROTORS	63.5	5	0.85	1.50	105.9	6,723.5	50	4.3	62.3	78
A2	1-1/2"	TURF	ROTORS	63.5	5	0.36	1.50	250.0	15,875.0	50	3.7	60.4	76
A3	2"	TURF	ROTORS	63.5	5	2.31	1.50	39.0	2,474.0	50	9.68	69.1	84
A4	1-1/2"	TURF	ROTORS	63.5	5	0.78	1.50	115.4	7,326.9	50	6.56	65.5	80
A5	1-1/2"	TURF	ROTORS	50.8	4	0.35	1.50	257.1	13,062.9	50	5.79	62.5	78
A6	1-1/2"	TURF	ROTORS	63.5	5	0.39	1.50	230.8	14,653.8	50	4.61	61.8	77
A7	1-1/2"	TURF	ROTORS	63.5	5	0.63	1.50	142.9	9,071.4	50	4.5	61.2	76
A8	1-1/2"	TURF	ROTORS	63.5	5	0.92	1.50	97.8	6,212.0	50	3.27	58.7	73
A9	1-1/2"	TURF	ROTORS	63.5	5	0.45	1.50	200.0	12,700.0	50	3.13	59	74
A10	1-1/2"	TURF	ROTORS	63.5	5	0.83	1.50	108.4	6,885.5	50	3.85	60.6	72
A11	1-1/2"	TURF	ROTORS	63.5	5	0.35	1.50	257.1	16,328.6	50	4.38	60.7	72
A12	1-1/2"	TURF	ROTORS	50.8	4	0.68	1.50	132.4	6,723.5	50	6.82	62.6	74
A13	1-1/2"	TURF	ROTORS	63.5	5	0.42	1.50	214.3	13,607.1	50	4.73	61	72
A14	1-1/2"	TURF	ROTORS	63.5	5	2.4	1.50	37.5	2,381.3	50	9.27	68.2	78
A15	1-1/2"	TURF	ROTORS	50.8	4	0.39	1.50	230.8	11,723.1	50	4.2	60.9	71
A16	1-1/2"	TURF	ROTORS	63.5	5	0.39	1.50	230.8	14,653.8	50	4.5	61.7	71
A17	1-1/2"	TURF	ROTORS	63.5	5	0.94	1.50	95.7	6,079.8	50	6.09	63.7	73
A18	1-1/2"	TURF	ROTORS	63.5	5	0.88	1.50	102.3	6,494.3	50	2.67	59	69
A19	1-1/2"	TURF	ROTORS	62.48	22	0.86	1.50	104.7	6,540.7	45	4.71	58.1	76
A20	1-1/2"	TURF	ROTORS	63.5	5	0.85	1.50	105.9	6,723.5	50	3.66	59.1	76
A21	1-1/2"	TURF	ROTORS	63.5	5	0.41	1.50	219.5	13,939.0	50	2.67	59	76
A22	1-1/2"	TURF	ROTORS	50.8	4	0.54	1.50	166.7	8,466.7	50	1.92	55.6	73
A23	1-1/2"	TURF	ROTORS	63.5	5	0.81	1.50	111.1	7,055.6	50	3.78	60.1	77
A24	1-1/2"	TURF	ROTORS	62.72	23	0.86	1.50	104.7	6,561.6	45	2.15	52.1	68
A25	1-1/2"	TURF	ROTORS	53.4	19	0.82	1.50	109.8	5,861.0	45	2.65	53.7	69
A26	1-1/2"	TURF	ROTORS	63.5	5	0.86	1.50	104.7	6,645.3	50	2.45	59.2	73
A27	1-1/2"	TURF	ROTORS	63.5	5	0.91	1.50	98.9	6,280.2	50	2.42	57.9	72
A28	1-1/2"	TURF	ROTORS	61.06	13	0.65	1.50	138.5	8,460.0	45	2.93	54.5	68
A29	1-1/2"	TURF	ROTORS	55.55	20	0.93	1.50	96.8	5,380.6	45	2.65	53.8	67
A30	1-1/2"	TURF	ROTORS	68.31	21	0.72	1.50	125.0	8,537.5	45	3.15	53.5	67
A31	1-1/2"	TURF	ROTORS	38.1	3	0.5	1.50	180.0	6,858.0	50	2.39	55.9	67
A32	1-1/2"	TURF	ROTORS	63.5	5	0.83	1.50	108.4	6,885.5	50	2.65	58.5	69
A33	1-1/2"	TURF	ROTORS	50.8	4	1.88	1.50	47.9	2,431.9	50	5.53	59.2	70
A34	1-1/2"	TURF	ROTORS	50.8	4	0.58	1.50	155.2	7,882.8	50	3.07	56.3	67
A35	1-1/2"	TURF	ROTORS	50.8	4	0.86	1.50	104.7	5,316.3	50	2.61	57.6	68
A36	1-1/2"	TURF	ROTORS	50.8	4	0.36	1.50	250.0	12,700.0	50	1.67	56.2	67
A37	1-1/2"	TURF	ROTORS	50.8	4	0.84	1.50	107.1	5,442.9	50	2.63	56.3	67
A38	1-1/2"	TURF	ROTORS	50.8	4	0.38	1.50	236.8	12,031.6	50	2.12	57.1	65
A39	1-1/2"	TURF	ROTORS	50.8	4	0.36	1.50	250.0	12,700.0	50	2.02	56.5	64
A40	1-1/2"	TURF	ROTORS	63.5	5	0.99	1.50	90.9	5,772.7	50	3.15	57.3	65
A41	1-1/2"	TURF	ROTORS	63.5	5	0.83	1.50	108.4	6,885.5	50	2.9	59.6	66
A42	1-1/2"	TURF	ROTORS	38.1	3	2.85	1.50	31.6	1,203.2	50	1.06	54.6	61
A43	1-1/2"	TURF	ROTORS	63.5	5	0.91	1.50	98.9	6,280.2	50	3.13	59.9	66
A44	1-1/2"	TURF	ROTORS	50.8	4	1.61	1.50	55.9	2,839.8	50	3.46	58	64
A45	1-1/2"	TURF	ROTORS	63.5	5	1.04	1.50	86.5	5,495.2	50	2.02	57.5	64
A46	1-1/2"	TURF	ROTORS	38.1	3	0.6	1.50	150.0	5,715.0	50	2.64	57.9	65
A47	1-1/2"	TURF	ROTORS	50.8	4	0.58	1.50	155.2	7,882.8	50	3.92	59.7	67
A48	1-1/2"	TURF	ROTORS	63.32	22	0.74	1.50	121.6	7,698.6	45	2.68	53.1	62
A49	1-1/2"	TURF	ROTORS	50.8	4	0.51	1.50	176.5	8,964.7	50	2.68	56.3	65
A50	1-1/2"	TURF	ROTORS	50.8	4	1.19	1.50	75.6	3,842.0	50	1.86	56	65
A51	1-1/2"	TURF	ROTORS	63.5	5	0.81	1.50	111.1	7,055.6	50	2.22	58.1	68
A52	1-1/2"	TURF	ROTORS	63.57	18	0.73	1.50	123.3	7,841.1	45	3.2	54.1	64
A53	1-1/2"	TURF	ROTORS	45.55	13	0.65	1.50	138.5	6,313.8	45	2.31	52.6	63
A54	1-1/2"	TURF	ROTORS	63.5	5	0.88	1.50	102.3	6,494.3	50	2.16	57.6	69
A55	1-1/2"	TURF	ROTORS	63.5	5	0.76	1.50	118.4	7,519.7	50	2.67	59	72
A56	1-1/2"	TURF	ROTORS	25.4	2	0.51	1.50	176.5	4,482.4	50	1.4	56.9	70
A57	1-1/2"	TURF	ROTORS	63.5	5	0.79	1.50	113.9	7,234.2	50	2.68	57.7	74
A58	1-1/2"	TURF	ROTORS	63.5	5	0.84	1.50	107.1	6,803.6	50	3.12	58.1	74
A59	1-1/2"	TURF	ROTORS	63.5	5	1.33	1.50	67.7	4,297.0	50	3.44	59.8	77
A60	1-1/2"	TURF	ROTORS	25.4	2	0.56	1.50	160.7	4,082.1	50	8.95	64.9	82
A61	1"	TURF	ROTORS	15.33	5	0.65	1.50	138.5	2,118.5	45	2.15	49.5	73
A62	1-1/2"	TURF	ROTORS	63.5	5	0.65	1.50	138.5	8,792.3	50	2.32	57.3	78
A63	1-1/2"	TURF	ROTORS	63.5	5	1.15	1.50	78.3	4,969.6	50	4.34	62.4	83
A64	1-1/2"	TURF	ROTORS	20.32	8	1	1.50	90.0	5,715.0	45	2.93	51.8	76
A65	1-1/2"	TURF	ROTORS	63.5	5	0.51	1.50	176.5	11,205.9	50	4.11	57	81
A66	1-1/2"	TURF	ROTORS	26.6	9	0.95	1.50	94.7	6,015.8	45	3.96	53.5	78
A67	1-1/2"	TURF	ROTORS	45.91	21	0.92	1.50	97.8	4,969.6	45	5.13	52.8	77
A68	1-1/2"	TURF	ROTORS	66.84	22	0.78	1.50	115.4	886.2	45	2.78	53.9	78
A69	1-1/2"	TURF	ROTORS	63.74	20	0.72	1.50	125.0	5,737.5	45	1.8	52.7	76
A70	1-1/2"	TURF	ROTORS	69.32	19	0.89	1.50	101.1	1,122.5	45	6.98	57.4	81
A71	1-1/2"	TURF	ROTORS	63.5	5	0.82	1.50	109.8	6,135.4	50	3.41	60.1	82
A72	1-1/2"	TURF	ROTORS	63.5	5	0.93	1.50	96.8	6,145.2	50	2.77	59.5	80
A73	1-1/2"	TURF	ROTORS	50.8	4	0.39	1.50	230.8	3,992.3	50	3.22	60.3	80
A74	1"	TURF	TURF SPRAY	7.68	9	1.31	1.50	68.7	2,171.0	30	1.25	34.7	52
A75	1-1/2"	TURF	TURF SPRAY	45.93	21	1.58	1.50	57.0	1,162.0	30	5.41	41.6	57
A76	1"	TURF	TURF SPRAY	11.07	10	1.51	1.50	59.6	196.7	30	1.19	33.5	47
A77	1-1/2"	TURF	TURF SPRAY	55.87	77	1.75	1.50	51.4	2,098.3	30	2.99	38.3	49
A78	1-1/2"	TURF	TURF SPRAY	63.49	32	1.03	1.50	87.4	3,486.4	30	3.13	37.7	48
A79	1-1/2"	TURF	TURF SPRAY	17.31	9	0.88	1.50	102.3	2,597.7	30	1.11	35	46
A80	1-1/2"	TURF	TURF SPRAY	31.62	18	1.28	1.50	70.3	3,571.9	30	2.44	35.6	42
A81	1-1/2"	TURF	TURF SPRAY	16.95	14	1.7	1.50	52.9	3,361.8	30	1.51	36.3	45
A82	1-1/2"	TURF	TURF SPRAY	7.53	11	1.62	1.50	55.6	3,527.8	30	0.41	34.7	58
A83	1"	NATIVE	SHRUB SPRAY	3.3	8	1.35	0.90	40.0	2,540.0	30	0.12	32.9	48
A84	1-1/2"	NATIVE	SHRUB SPRAY	40.82	22	1.41	0.90	38.3	2,431.9	30	1.18	36	47
A85	1-1/2"	NATIVE	SHRUB SPRAY	39.85	20	1.52	0.90	35.5	2,255.9	30	2.56	36.1	47
A86	1-1/2"	NATIVE	NAT THORNTON	25.4	2	0.97	0.20	12.4	471.3	50	1.5	55.7	62
A87	1-1/2"	NATIVE	NAT THORNTON	50.8	4	2.2	0.20	5.5	281.5	50	2.66	56.8	63
A88	1-1/2"	NATIVE	NAT THORNTON	63.5	5	0.9	0.20	13.3	846.7	50	3.15	58.1	64
A89	1-1/2"	NATIVE	NAT THORNTON	63.5	5	0.58	0.20	20.7	1,313.8	50	2	56.6	63
A90	1-1/2"	NATIVE	NAT THORNTON	63.5	5	0.58	0.20	20.7	968.3	50	1.73	57.2	62
A91	1-1/2"	NATIVE	NAT THORNTON	63.5	5	0.97	0.20	12.4	857.3	50	2.49	57.1	62
A92	1-1/2"	NATIVE	NAT THORNTON	63.5	5	0.95	0.20	12.6	367.6	50	2.34	58.2	63
A93	1-1/2"	NATIVE	NAT THORNTON	38.1	3	0.56	0.20	21.4	432.9	50	1.98	55.5	60
A94	1-1/2"	NATIVE	NAT THORNTON	51.64	8	0.68	0.20	17.6	1,178.8	45	2.88	51.2	55
A95	1-1/2"	NATIVE	NAT THORNTON	63.5	5	1.12	0.20	10.7	544.3	50	2.62	56.8	61
A96	1-1/2"	NATIVE	NAT THORNTON	63.5	5	1.3	0.20	9.2	586.2	50	1.77	56.8	61
A97	1-1/2"	NATIVE	NAT THORNTON	46.75	11	0.64	0.20	18.8	1,190.6	45	4.96	53.1	56
A98	1-1/2"	NATIVE	NAT THORNTON	63.5	5	2.18	0.20	5.5	349.5	50	2.54	58.9	82
A99	1-1/2"	NATIVE	NAT THORNTON	63.5	5	0.49	0.20	24.5	1,244.1	50	1.78	55.1	80
A100	1-1/2"	NATIVE	NAT THORNTON	63.5	5	1.16	0.20	10.3	656.9	50	2.61	57.2	83
A101	1-1/2"	NATIVE	NAT THORNTON	63.5	5	0.89	0.20	13.5	684.9	50	1.93	57.8	82
A102	1-1/2"	NATIVE	NAT THORNTON	50.8	4	0.44	0.20	27.3	1,731.8	50	3.4	57.5	81
A103	1-1/2"	NATIVE	NAT THORNTON	63.5	5	0.92	0.20	13.0	497.0	50	3.06	59.4	83
A104	1-1/2"	NATIVE	NAT THORNTON	50.8	4	1.69	0.20	7.1	425.3	50	2.72	56.8	83
A105	1-1/2"	NATIVE	NAT THORNTON	63.5	5	1.18	0.20	10.2	76.6	50	3.42	57.1	80
A106	1-1/2"	NATIVE	NAT THORNTON	38.1	3	0.56	0.20	21.4	435.0	50	2.22	54.9	78
A107	1-1/2"	NATIVE	TREE ROTORS	50.8	4	1.02	0.90	52.9	1,852.9	50	4.52	57.3	82
A108	1-1/2"	NATIVE	TREE ROTORS	38.1	3	2.24	0.90	24.1	1,224.6	50	2.53	58.2	82
A109	1-1/2"	NATIVE	TREE ROTORS	63.5	5	0.79	0.90	68.4	2,604.3	50	3.55	61.2	84
A110	1-1/2"	NATIVE	TREE ROTORS	63.5	5	2.53	0.90	21.3	1,355.3	50	6.75	59.2	85
A111	1-1/2"	NATIVE	TREE ROTORS	38.1	3	0.36	0.90	150.0	9,525.0	50	2.89	55.1	81
A112	1-1/2"	NATIVE	TREE ROTORS	63.5	5	0.78	0.90	69.2	2,637.7	50	3.22	57.4	83
A113	1-1/2"	NATIVE	TREE ROTORS	63.5	5	0.78	0.90	69.2	4,396.2	50	5.01	59.1	83
A114	1-1/2"	NATIVE	TREE SPRAY	37.93	18	1	0.90	54.0	3,429.0	30	3.92	38.7	62
A115	1-1/2"	NATIVE	TREE SPRAY	21.44	17	0.99	0.90	54.5	1,800.0	30	1.63	37.2	61
A116	1-1/2"	NATIVE	TREE SPRAY	52.05	32	1.04	0.90	51.9	2,710.4	30	3.59	38.2	44
A117	1-1/2"	NATIVE	TREE SPRAY	56.05	37	1.09	0.90	49.5	2,581.1	30	1.29	37.1	42
A118	1-1/2"	NATIVE	TREE SPRAY	57.98	33	0.95	0.90	56.8	3,188.8	30	2.88	37.1	41
A119	1-1/2"	NATIVE	TREE SPRAY	18.8	11	1.28	0.90	42.2	2,446.9	30	0.81	34.7	39

PROJECTED PEAK SEASON (JULY/AUGUST) WATER USE PER WEEK **612,480.4** **Gallons** GALLONS PER MONTH =2,449,922
PEAK SEASON HOURS PER WEEK **192.2** **Hours**
REQUIRED NUMBER DAYS PER WEEK **6** **Days**
REQUIRED NUMBER HOURS A DAY **8** **Hours**

PROPOSED PROGRAMING CHECK

OVER	**6**	**Days**
RUNNING	**4**	**Stations at a Time** (max +/-318 Gal Flow)
AT	**8.0**	**Hours a Day**

OPINION OF PRESSURE LOSS / CRITICAL ANALYSIS

P.O.C. NUMBER: #1 WORST-CASE SCENARIO

WATER SOURCE INFORMATION:
HGL HIGH = 5375', HGL LOW = 5351',
TAP LOCATION = 5236.5'
= 50.0 PSI PRESSURE AVAILABLE

FLOW AVAILABLE

WATER METER SIZE:	4"
FLOW AVAILABLE:	339.89 GPM

PRESSURE AVAILABLE (TAP TO METER)

STATIC PRESSURE AT POC:	49.6 PSI
ELEVATION CHANGE:	1.00 FT
SERVICE LINE SIZE:	4"
LENGTH OF SERVICE LINE:	20 FT
TOTAL PRESSURE LOSSES BEFORE PUMP:	-13.6 PSI
BOOSTER PUMP PRESSURE PROVIDED:	54 PSI
PRESSURE AVAILABLE AT THE DISCHARGE:	90 PSI

DESIGN ANALYSIS

MAXIMUM MULTI-VALVE FLOW:	318.00 GPM
FLOW AVAILABLE AT POC:	339.89 GPM
RESIDUAL FLOW AVAILABLE:	021.89 GPM

CRITICAL STATION: A110

PRESSURE REQ. AT CRITICAL STATION:		59.20 PSI
-DESIGN PRESSURE:	50 PSI	
-FRICTION LOSS:	6.14 PSI	
-FITTINGS LOSS:	0.61 PSI	
-ELEVATION LOSS:	-2.17 PSI	
-LOSS THROUGH VALVE:	4.57 PSI	
LOSS FOR FITTINGS:		00.15 PSI
LOSS FOR MAIN LINES:		01.50 PSI
LOSS FOR POC TO VALVE ELEVATION:		05.20 PSI
LOSS FOR BACKFLOW:		10.70 PSI
LOSS FOR WATER METER:		08.21 PSI
CRITICAL STATION PRESSURE AT POC:		85.00 PSI
PRESSURE AVAILABLE:		90.00 PSI
RESIDUAL PRESSURE AVAILABLE:		5.04 PSI

RUNTIME SUMMARY ANALYSIS

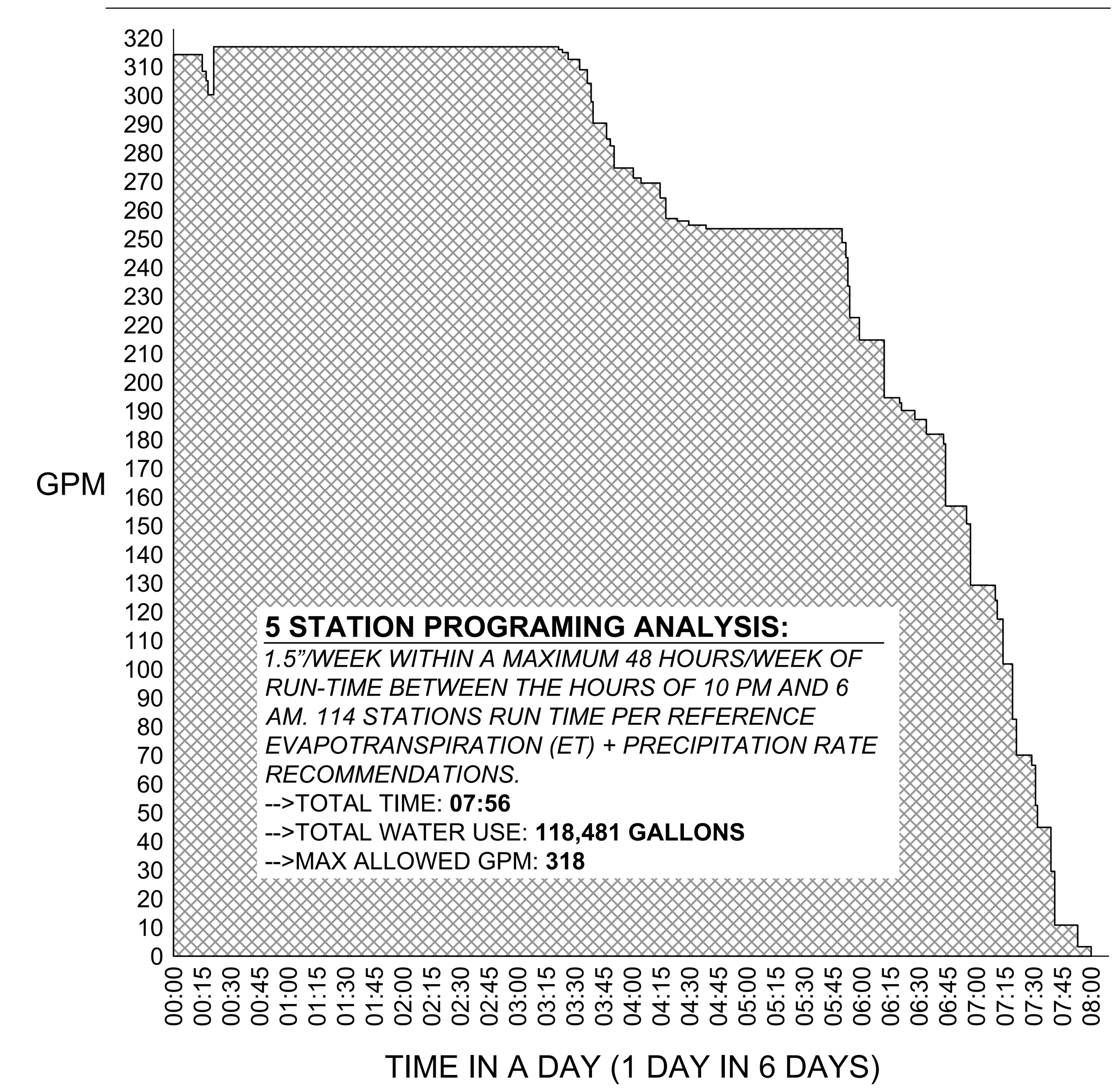

Farnsworth GROUP
5613 DTC PARKWAY, SUITE 1100
GREENWOOD VILLAGE, COLORADO 80111
(303) 692-8838 / info@f-w.com
www.f-w.com
Engineers | Architects | Surveyors | Scientists

ISSUE:

#	DATE:	DESCRIPTION:

PREPARED UNDER THE DIRECT SUPERVISION OF JOSEPH L. WILSON, PLA, CID, CLIA, QWEL, WWLP, COLORADO LICENCE REGISTRATION LA-304

PRELIMINARY
NOT FOR CONSTRUCTION
THESE DRAWINGS AND/OR SPECIFICATIONS ARE BEING ISSUED FOR INFORMATION ONLY. THEY ARE NOT INTENDED TO BE USED FOR FINAL PRICING OR FOR CONSTRUCTION. THEY ARE PRELIMINARY IN NATURE AND ARE SUBJECT TO CHANGE PRIOR TO ISSUANCE OF THE PROJECT CONSTRUCTION DOCUMENTS. ANY PRICING ATTAINED BY THE CONTRACTOR VIA THE USE OF THESE DOCUMENTS IS CONSIDERED TO BE AT THE RISK OF THE CONTRACTOR.

PROJECT:
CITY OF THORNTON
9500 CIVIC CENTER DRIVE
THORNTON, COLORADO 80229

CHERRY PARK IRRIGATION REHABILITATION, PROJECT 22-46B

11500 BIRCH DR,
THORNTON, CO
80233

DATE:	07/11/2025
DESIGNED:	JLW
DRAWN:	JLW
REVIEWED:	JLW
FIELD BOOK NO.:	-

SHEET TITLE:
IRRIGATION DESIGN CALCULATIONS

SHEET NUMBER:
IR2.2

PROJECT NO.: 0231420.00

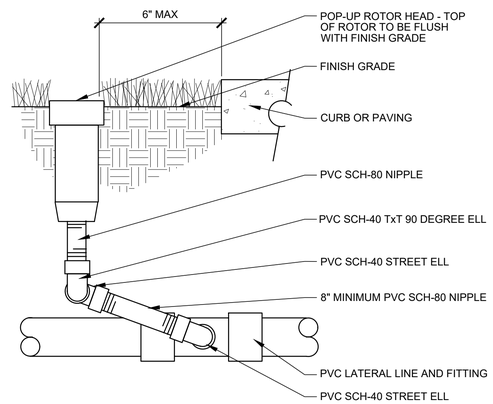

A ROTARY HEAD
SCALE: NTS

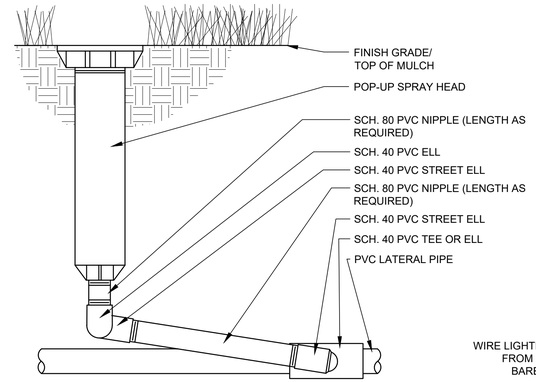

B POP-UP SPRAY HEAD
SCALE: NTS

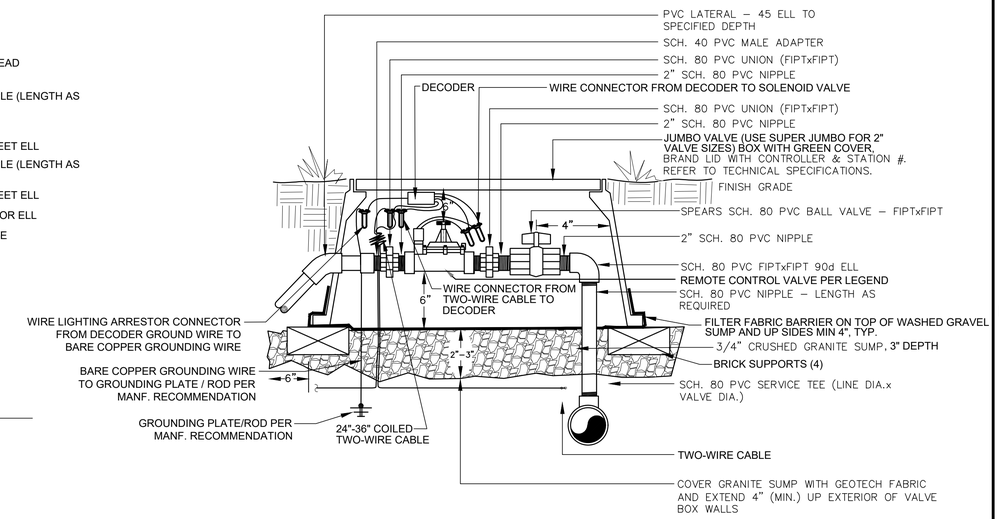

NOTES:
1. DIAMETERS OF BALL VALVES, PVC FITTINGS, AND NIPPLES SHALL EQUAL ELECTRIC CONTROL VALVE DIAMETER.
2. VALVE BOXES SHALL BE INSTALLED PARALLEL OR PERPENDICULAR TO ADJACENT SIDEWALKS AND HARD SURFACES WHERE APPLICABLE.
3. USE BRAND NAMES SPECIFIED OR APPROVED EQUAL.
4. BALL VALVE IN SEPARATE BOX FOR VALVES THAT ARE 3" OR GREATER.
5. INSTALL FILTER FABRIC AROUND EXTERIOR OF VALVE BOX PER DETAIL. USE DUCT TAPE TO SECURE FABRIC TO PIPE AND VALVE BOX.
6. USE VALVE BOX EXTENSION AS NECESSARY TO ACHIEVE MINIMUM DIMENSIONS ABOVE ASSEMBLY
7. DO NOT CUT OUT ENDS OF VALVE BOX UNNECESSARILY.
8. POSITION VALVE BOX OVER VALVE TO ALLOW ACCESS TO SOLENOID.
9. SEE DECODER GROUNDING SCHEMATIC FOR ADDITIONAL DECODER GROUNDING INFORMATION.

C REMOTE CONTROL VALVE - CITY OF THORNTON STANDARD DETAIL
SCALE: NTS

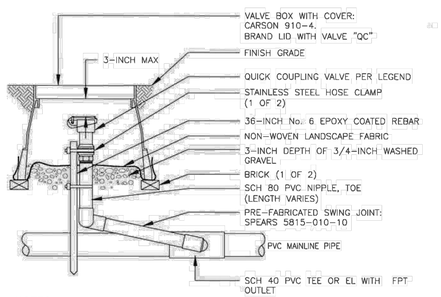

NOTES:
1. FURNISH FITTINGS AND PIPING NOMINALLY SIZED IDENTICAL TO NOMINAL QUICK COUPLING VALVE INLET SIZE.
2. INSTALLATION HEIGHT OF QUICK COUPLER VALVE IN VALVE BOX MUST ASSURE PROPER OPERATION OF QUICK COUPLER KEY.
3. INSTALL SWING JOINT LAY ARM BETWEEN 30° AND 45° OF LATERAL PIPE IN ORDER TO ABSORB DOWNWARD IMPACT.

D QUICK-COUPLING VALVE
SCALE: NTS

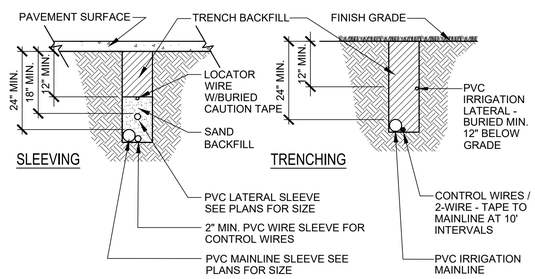

NOTE:
1. REFER TO IRRIGATION SPECIFICATIONS FOR COVERAGE DEPTH TO BURIED PIPE AND WIRE. EXTEND SLEEVES INTO LANDSCAPE AREAS 6" BEYOND EDGE OF HARDSCAPE.
2. INSTALL SLEEVE SO THAT ITS LOWEST ELEVATION OCCURS AT ONE OR BOTH ENDS - NOT ALONG ITS LENGTH.
3. CONTRACTOR TO PUT AN 'X' ENGRAVED INTO THE 8' WIDE CONCRETE TRAIL WERE THE IRRIGATION SLEEVES ARE LOCATED, TYP.

E PIPE AND SLEEVE INSTALLATION
SCALE: NTS

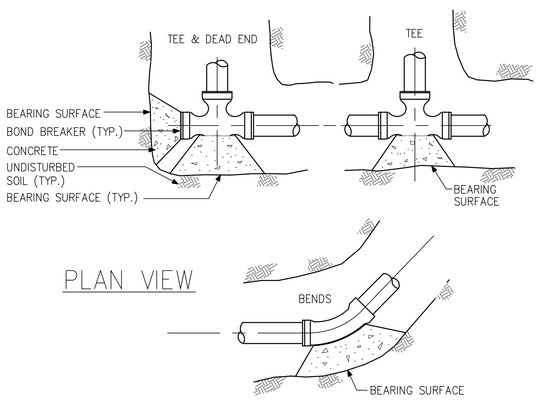

THRUST BLOCKS SHALL BE CONSTRUCTED AT BENDS AND FITTINGS WHICH RESULT IN UNBALANCED LINE THRUST. CARE SHALL BE TAKEN NOT TO BLOCK OUTLETS OR TO COVER BOLTS, NUTS, CLAMPS OR OTHER FITTINGS OR TO MAKE THEM INACCESSIBLE.

A BOND BREAKER SHALL BE PLACED BETWEEN THE FITTING AND THE THRUST BLOCK TO AID IN EASE OF FUTURE REMOVAL.

THE VERTICAL SIDES OF THE CONCRETE THRUST BLOCKS SHALL BE FORMED TO ALLOW FOR SYMMETRICAL THRUST.

WHEN IT IS IMPOSSIBLE THROUGH OVER EXCAVATION OR OTHER CAUSES TO POUR A THRUST BLOCK AGAINST UNDISTURBED EARTH, HARNESS RODS SHALL BE REQUIRED TO ANCHOR THE FITTINGS TO THE MAIN UPON APPROVAL OF THE DEVELOPMENT ENGINEERING MANAGER.

BACKFILL MAY BE PLACED OVER THE THRUST BLOCK ONCE THE SURFACE HAS SET SUFFICIENTLY TO RESIST THE WEIGHT OF THE BACKFILL.

NO DRY KICKERS SHALL BE ALLOWED.

NO HAND MIXED CONCRETE SHALL BE ALLOWED.

USE REBAR AS ANCHORING RODS INTO THRUST BLOCKS AT MAINLINE GATE VALVES.

WRAP PIPE & FITTINGS W/ AT LEAST 4 LAYERS OF 6-MIL PLASTIC SHEETING, SEE CORROSION PROTECTION DETAIL.

NOTES:
1. THRUST BLOCKS MUST BE CAST IN PLACE CONCRETE.
2. NO TAMPING OR COMPACTING SHALL BE ALLOWED ABOVE THRUST BLOCK FOR A MINIMUM OF TWENTY-FOUR (24) HOURS AFTER PLACEMENT.
3. CONCRETE MUST SET A MINIMUM OF FORTY-EIGHT (48) HOURS PRIOR TO THE PERFORMANCE OF A HYDROSTATIC TEST.
4. BEARING SURFACE BASED ON BEARING STRENGTH OF 3000 P.S.F. AND MAIN PRESSURE OF 200 P.S.I.. FOR MAINS GREATER THAN 16" OR VERICAL THRUSTS, SHOW AREA REQUIREMENT ON STANDARD DETAILS.
5. BOND BREAKER TO BE MINIMUM OF 8 MIL. POLYETHYLENE PLASTIC.

F THRUST BLOCKING
SCALE: NTS

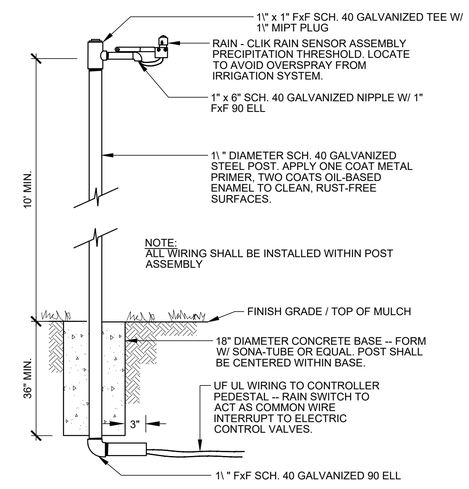

G RAIN SENSOR
SCALE: NTS

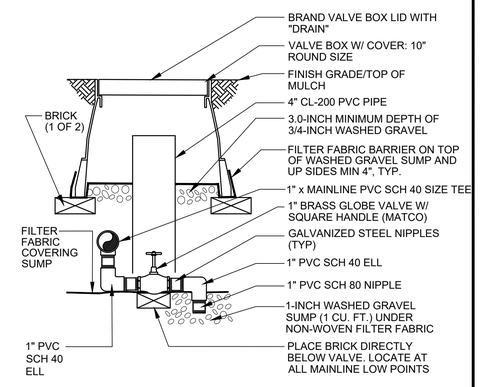

H MANUAL DRAIN VALVE
SCALE: NTS

Farnsworth GROUP
5613 DTC PARKWAY, SUITE 1100
GREENWOOD VILLAGE, COLORADO 80111
(303) 692-8838 / info@f-w.com
www.f-w.com
Engineers | Architects | Surveyors | Scientists

ISSUE:

#	DATE:	DESCRIPTION:

PREPARED UNDER THE DIRECT SUPERVISION OF JOSEPH L. WILSON, PLA, CID, CLIA, QWEL, WWLP, COLORADO LICENCE REGISTRATION LA-304

PRELIMINARY
NOT FOR CONSTRUCTION
THESE DRAWINGS AND/OR SPECIFICATIONS ARE BEING ISSUED FOR INFORMATION ONLY. THEY ARE NOT INTENDED TO BE USED FOR FINAL PRICING OR FOR CONSTRUCTION. THEY ARE PRELIMINARY IN NATURE AND ARE SUBJECT TO CHANGE PRIOR TO ISSUANCE OF THE PROJECT CONSTRUCTION DOCUMENTS. ANY PRICING ATTAINED BY THE CONTRACTOR VIA THE USE OF THESE DOCUMENTS IS CONSIDERED TO BE AT THE RISK OF THE CONTRACTOR.

PROJECT:
CITY OF THORNTON
9500 CIVIC CENTER DRIVE
THORNTON, COLORADO 80229

CHERRY PARK IRRIGATION REHABILITATION, PROJECT 22-46B

11500 BIRCH DR,
THORNTON, CO
80233

DATE:	07/11/2025
DESIGNED:	JLW
DRAWN:	JLW
REVIEWED:	JLW
FIELD BOOK NO.:	-

SHEET TITLE:
IRRIGATION DETAILS

SHEET NUMBER:
IR2.3

PROJECT NO.: 0231420.00

jgreen | J:\2023\0231420.00 - Cherry Park Irrigation Rehabilitation\04_drawings\IR\IR_Plan - 0231420.00_20250523.dwg | 7/12/2026 4:03 PM |

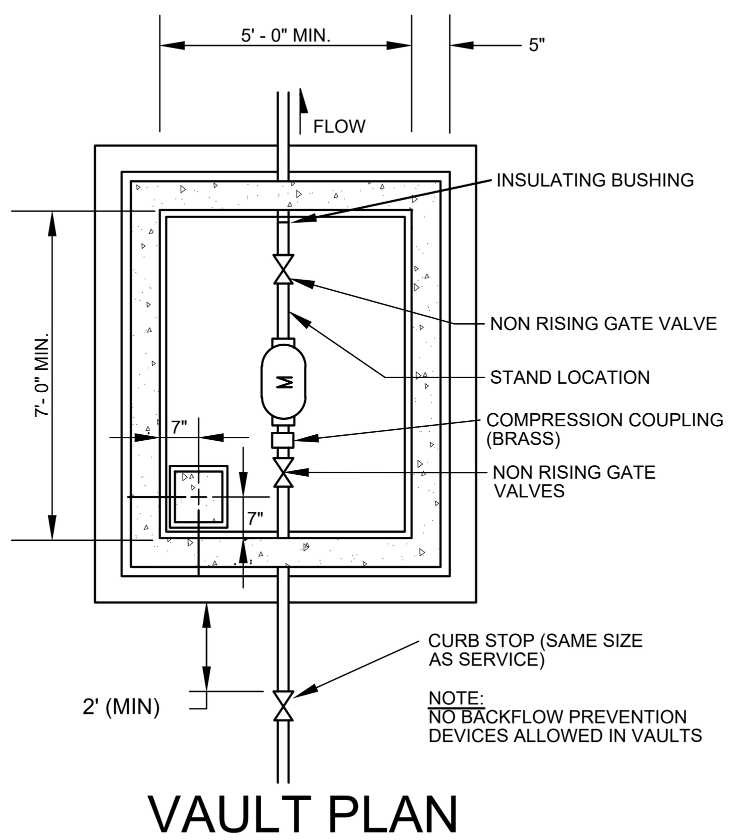

VAULT PLAN

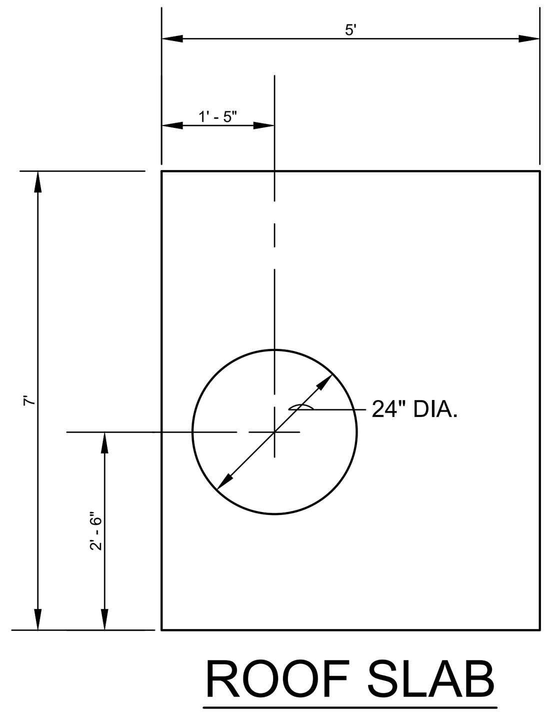

ROOF SLAB

SIZE	LAYING LENGTH
1 - 1/2" COMPOUND	13 - 1/2"
2" TURBINE	10 - 3/4"
3" TURBINE	12 - 1/4"
4" TURBINE	14 - 1/4"

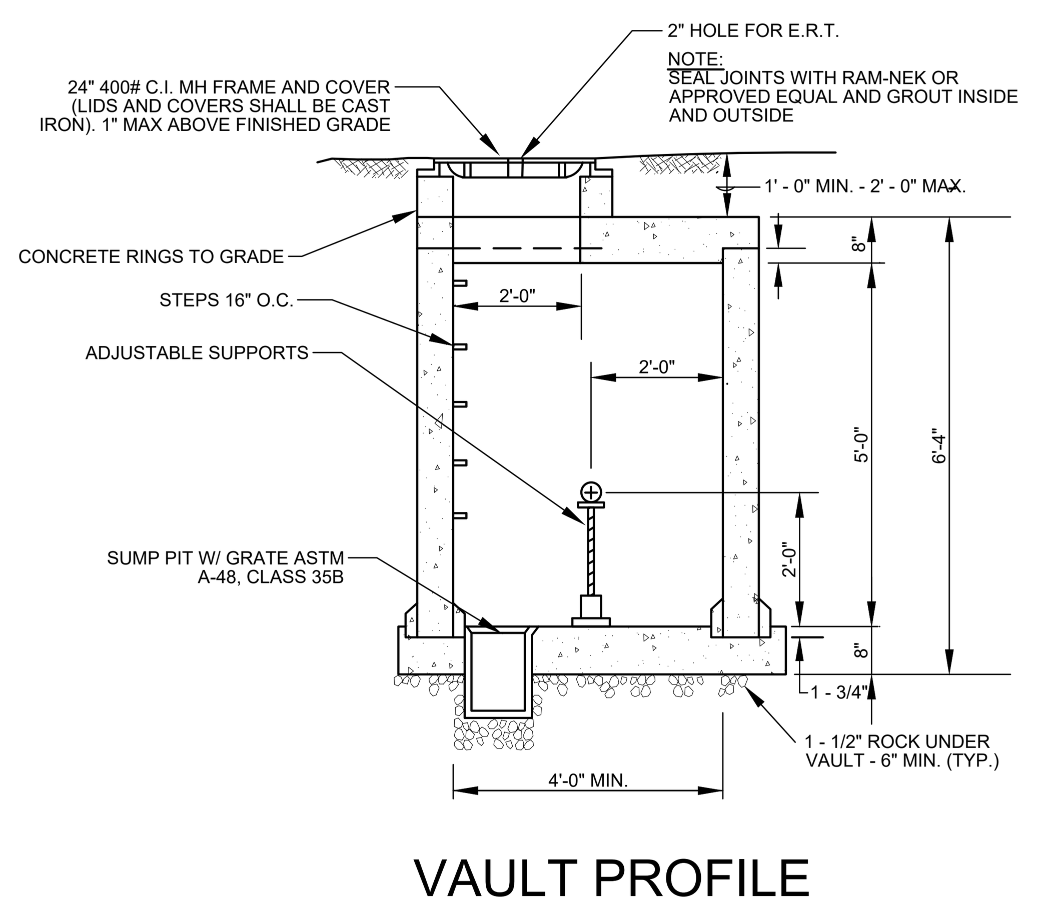

VAULT PROFILE

ALL IRRIGATION WATER CONNECTION TAPS AND SERVICE LINES ARE REQUIRED TO BE A MINIMUM OF 4". TAPS SHALL USE A FORD STAINLESS STEEL TAPING SLEEVE WITH A MINIMUM 4" OUTLET, OR APPROVED EQUIVALENT. IF C900 PVC SERVICE LINE IS USED, CONNECT IT TO THE TAPPING SLEEVING USING A MEGALUG MECHANICAL JOINT RESTRAINT OR APPROVED EQUIVALENT. IF A VARIANCE IS GRANTED AND A SMALLER TAP AND SERVICE LINE IS APPROVED, THEN REFER TO WATER SERVICE INSTRUCTIONS IN DETAILS #200-14, 17A, & 18B.

CORPORATION STOPS SHALL BE AWWA TAPER THREAD TO COPPER CONNECTION OF PACK JOINT AND SHALL BE A FORD TYPE F600 OR AN APPROVED EQUAL. TAPS SHALL BE MADE BY THE RESPONSIBLE PARTY.

A MINIMUM 4" GATE VALVE CONFORMING TO DETAIL #200-A/B OF THESE STANDARDS AND SPECIFICATIONS SHALL BE INSTALLED ON EVERY IRRIGATION SERVICE BETWEEN THE WATER MAIN AND THE METER, WHICH IS AT A POINT AT OR NEAR THE PROPERTY LINE. THE VALVE SHALL BE ACCESSIBLE THROUGH A TYLER 6860 3-PIECE VALVE BOX WITH STANDARD OVAL BASE AND A DROP LID.

INSIDE THE METER PIT, PIPE SHALL BE TYPE K CLASS, RIGID COPPER PIPE. THE METER VAULT PIPING SHALL BE OF THE SAME INSIDE DIAMETER AS THE METER ORIFICE. ANY SERVICE PIPE MATERIAL CHANGES SHALL OCCUR OUTSIDE THE METER VAULT.

JOINTS SHALL BE OF A SWEAT COPPER DESIGN. SOLDER USED IN CONNECTION OF THE JOINTS SHALL BE OF A LEAD CONTENT OF 0.20 OR LESS.

GATE VALVES SHALL BE AWWA APPROVED GATE VALVES OF BRASS CONSTRUCTION. THE VALVES SHALL BE COUNTERCLOCKWISE OPEN. REFER TO SUBSECTION 204.1(D) OF THESE STANDARDS AND SPECIFICATIONS . VALVES LOCATED N VAULTS SHALL HAVE HANDWHEELS IN LIEU OF A TWO (2) INCH SQUARE OPERATING NUT.

WATER SERVICE LOCATIONS SHALL BE MARKED WITH A "V" ON THE CURB, AND SEWER SERVICE SHALL BE MARKED WITH AN "X". MARKINGS SHALL BE NEATLY STAMPED, CHISELED OR SAWCUT, AND SHALL NOT BE PAINTED.

METER VAULT LIDS AND COVER SHALL BE CAST IRON.

PIPE SHALL BE TYPE K CLASS, RIGID COPPER PIPE. THE METER VAULT PIPING SHALL BE OF THE SAME INSIDE DIAMETER ORIFICE. JOINTS SHALL BE OF SWEAT COPPER DESIGN. SOLDER USED IN CONNECTION OF THE JOINTS SHALL BE OF A LEAD CONTENT OF 0.20 OR LESS. THE OUTLET SIDE OF THE COPPER SETTERS SHALL BE ISOLATED FROM THE SERVICE LINE WITH A FORD SERVICE INSULATOR OR APPROVED EQUIVALENT.

GATE VALVES SHALL BE AWWA APPROVED GATE VALVES OF BRASS CONSTRUCTION. THE VALVE STEMS SHALL BE OF NON-RISING DESIGN. VALVES SHALL BE COUNTERCLOCKWISE OPEN, AND SHALL HAVE HANDWHEELS IN LIEU OF A TWO (2) INCH SQUARE OPERATING NUT. VALVES SHALL BE INSTALLED BOTH UPSTREAM AND DOWNSTREAM OF THE WATER METER WITHIN THE VAULT.

BRASS UNIONS OF A COMPRESSION TYPE SEALING DESIGN BE INSTALLED BETWEEN THE GATE VALVE AND THE WATER METER, EITHER UPSTREAM OR DOWNSTREAM OF THE METER TO FACILITATE REMOVAL OF THE WATER METER FROM THE SERVICE LINE.

I STANDARD IRRIGATION METER SETTING VAULT DETAIL FOR 4" METER
SCALE: NTS

NOTE:

CONCRETE PAD PENETRATIONS TO BE 1" LARGER THAN SLEEVE DIAMETER.

REFER TO ENCLOSURE INSTRUCTIONS FOR CONCRETE PAD DIMENSIONS.

ALL VALVES AND FITTINGS INCLUDING RPZ SHALL MATCH SIZE OF THE SERVICE LINE FROM METER. SEE TABLE 800 – 1 & 2 IN THESE STANDARDS AND SPECIFICATIONS FOR MORE INFORMATION.

SEE DETAIL 800–10A & 10B FOR SPECIFIC VAULT AND METER SETTING REQUIREMENTS.

SEE SECTION 800 OF THE WRITTEN SPECIFICATIONS FOR ADDITIONAL REQUIREMENTS OF COMPONENTS.

EXTEND CRUSHED GRAVEL SUMP 6" BEYOND THE PERIMETER OF EACH ACCESS BOX FOR SUPPORT AND DRAINAGE.

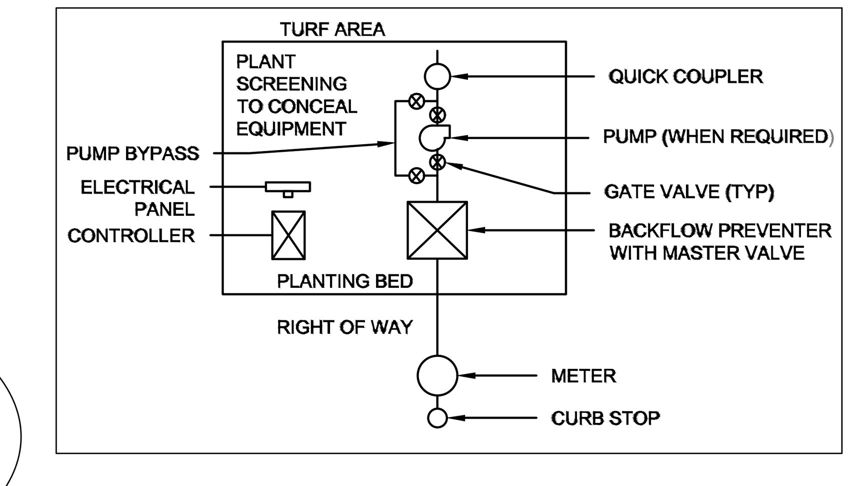

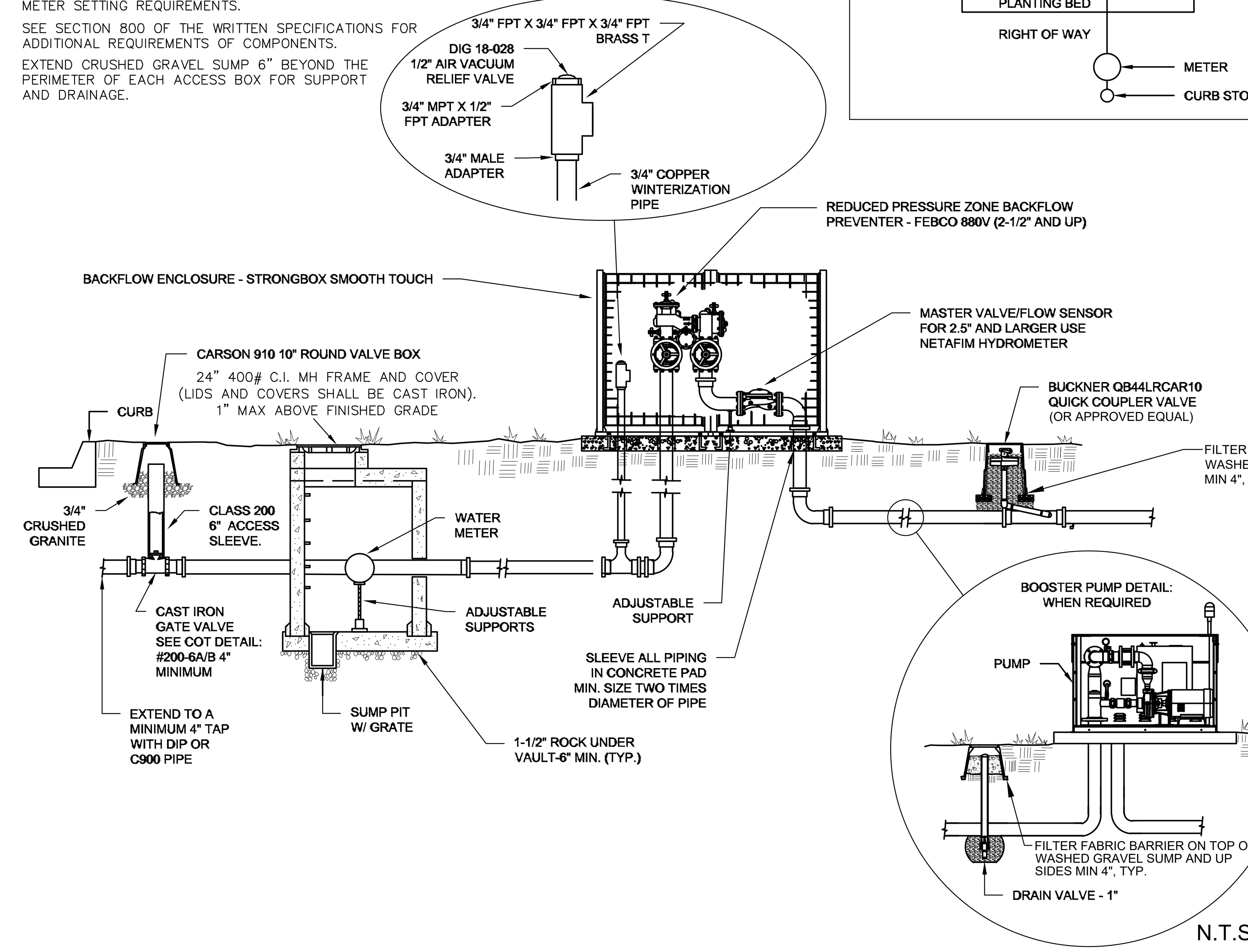

J 1.5" & LARGER IRRIGATION METER POINT OF CONNECTION DETAIL
SCALE: NTS

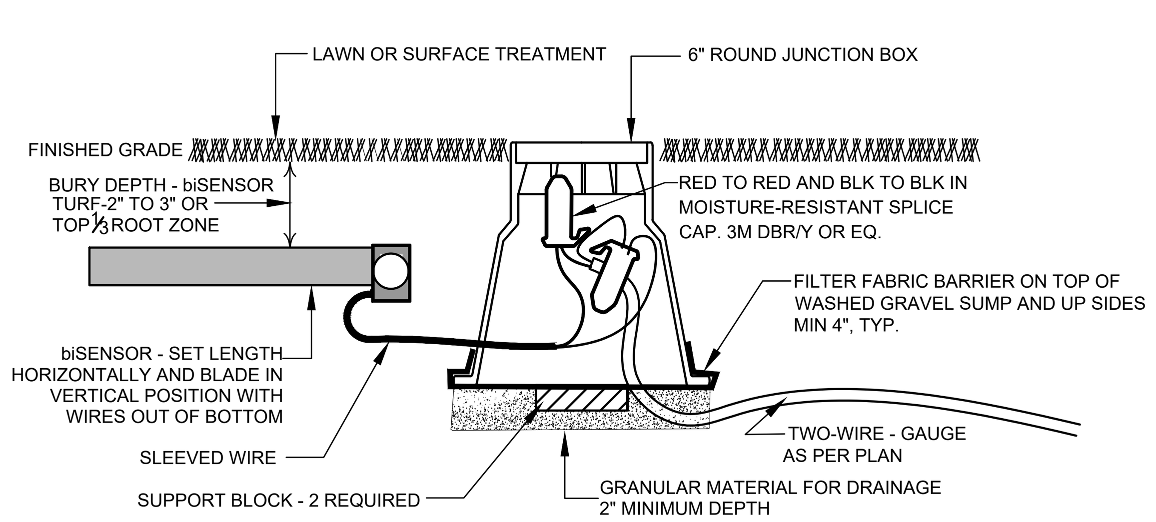

NOTE:
1. ONE SENSOR PER HYDROZONE.
2. MARK SENSORS WITH BASE ANCHOR EITHER SIDE.

K BL-5315B biSENSOR SOIL MOISTURE SENSOR
SCALE: NTS

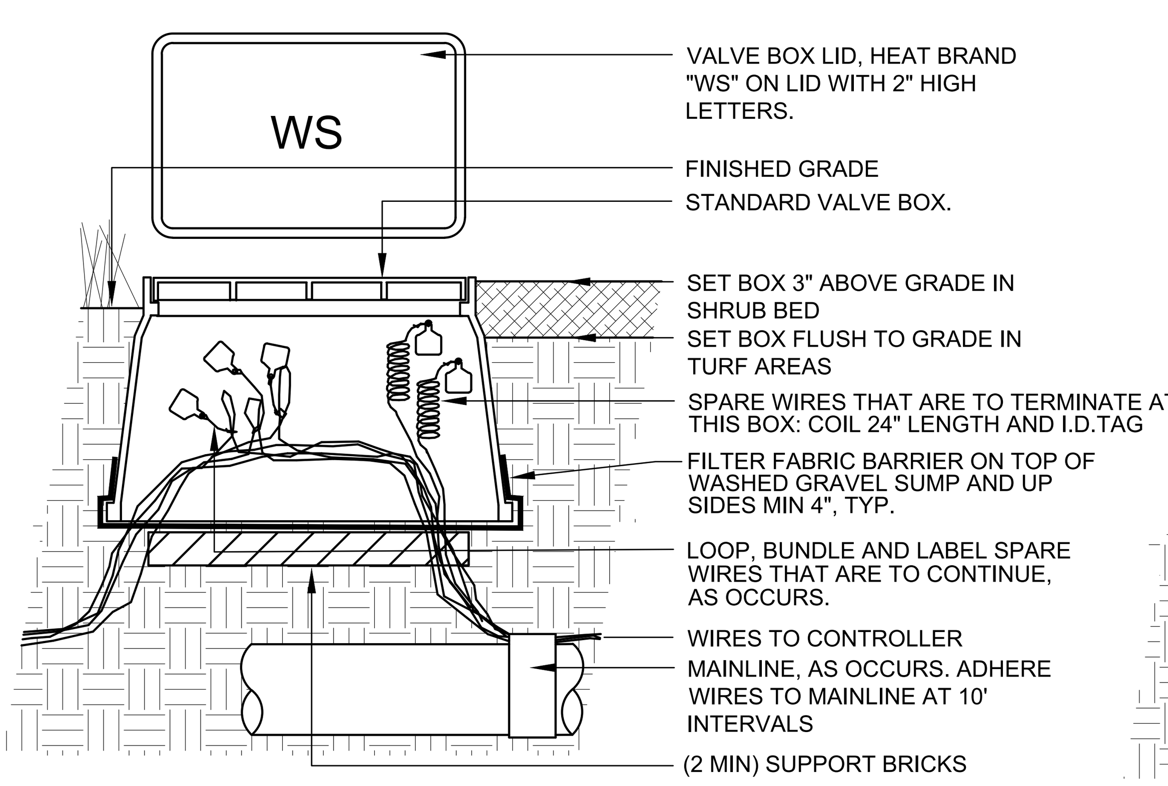

L WIRE SPLICE BOX
SCALE: NTS

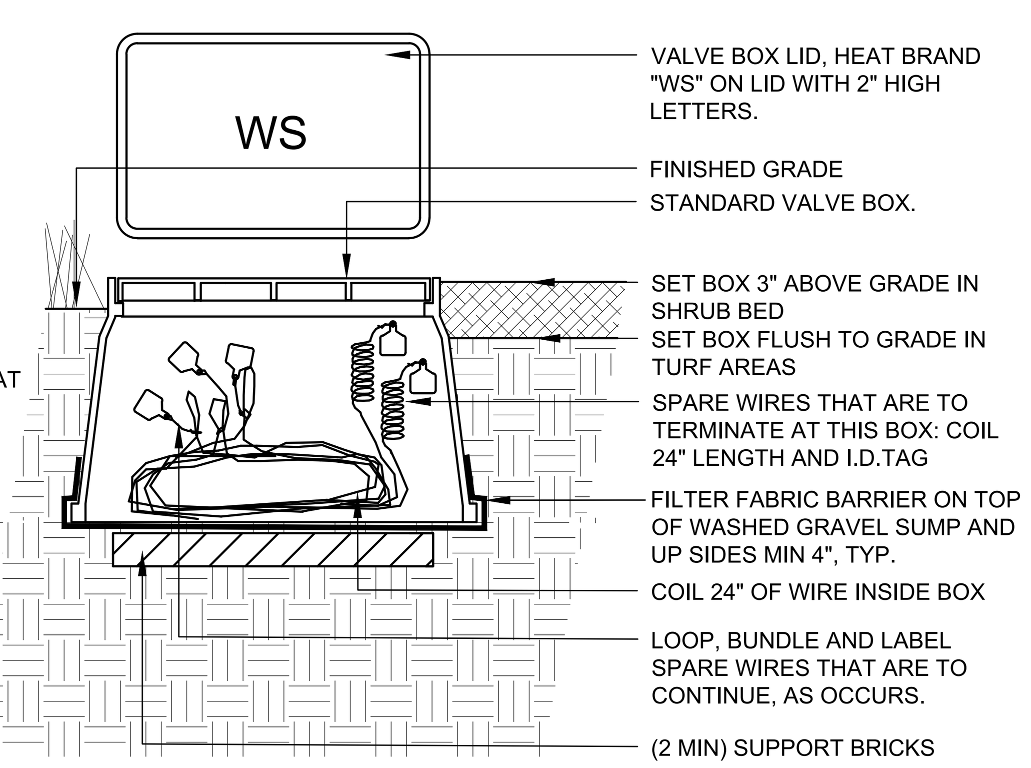

M WIRE BUNDLE
SCALE: NTS

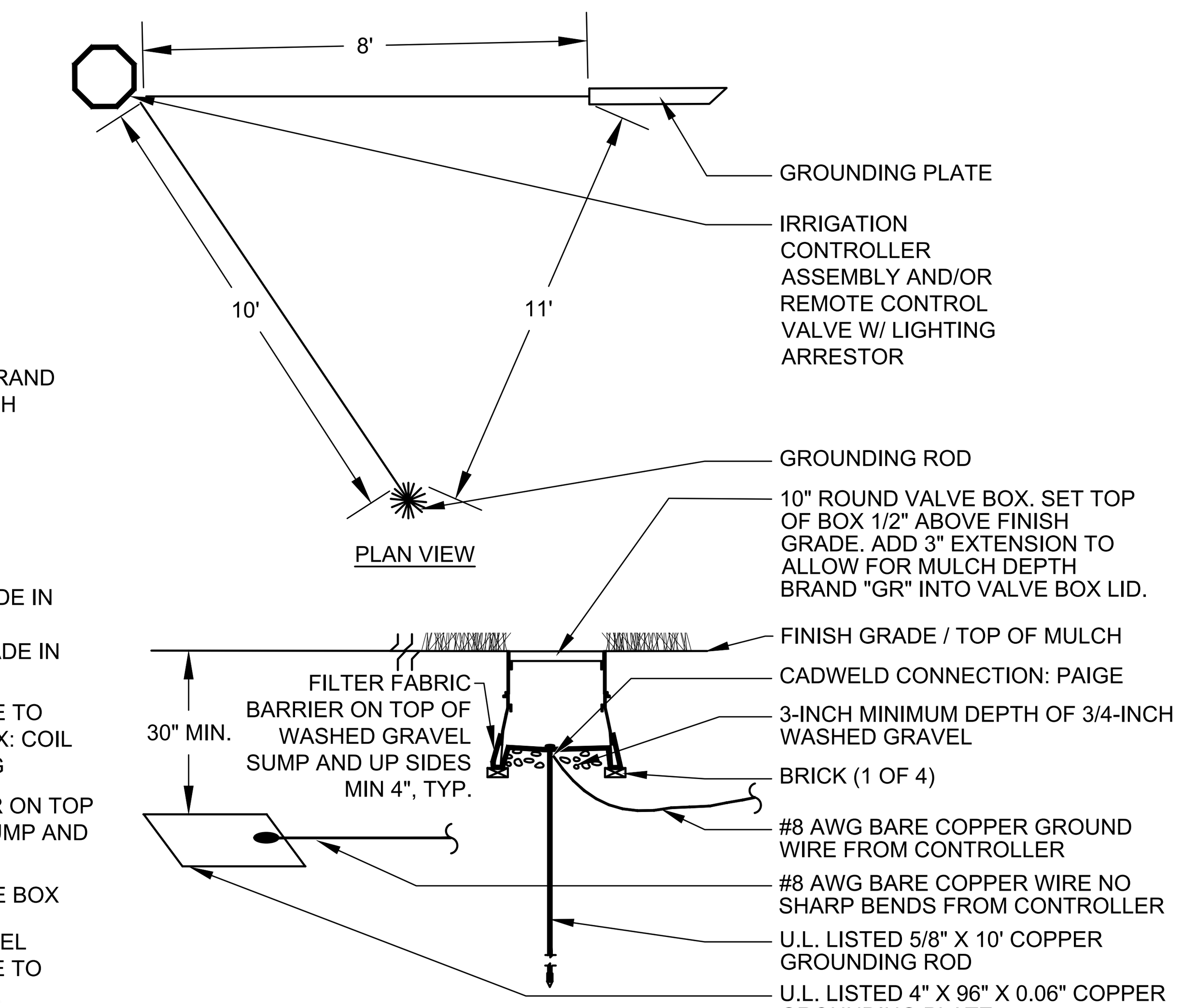

NOTE:
1. INSTALL GROUNDING RODS PER BASELINE SPECIFICATIONS.
2. MINIMUM ONE GROUNDING ASSEMBLY PER EVERY 600' OF WIRE OR AFTER 8 VALVES ALONG A WIRE RUN. INSTALL AT ALL ENDS OF WIRE RUNS.

N CONTROLLER & 2-WIRE GROUNDING
SCALE: NTS

ggreen | J:\2023\0231420.00 – Cherry Park Irrigation Rehabilitation\04_drawings\DWG\IR1_Plan – 0231420.00_20250523.dwg | 1/12/2026 4:03 PM |

Farnsworth GROUP
5613 DTC PARKWAY, SUITE 1100
GREENWOOD VILLAGE, COLORADO 80111
(303) 692-8838 / info@f-w.com
www.f-w.com
Engineers | Architects | Surveyors | Scientists

ISSUE:

#	DATE:	DESCRIPTION:

PREPARED UNDER THE DIRECT SUPERVISION OF JOSEPH L. WILSON, PLA, CID, CLIA, QWEL, WWLP, COLORADO LICENCE REGISTRATION LA-304

PRELIMINARY
NOT FOR CONSTRUCTION
THESE DRAWINGS AND/OR SPECIFICATIONS ARE BEING ISSUED FOR INFORMATION ONLY. THEY ARE NOT INTENDED TO BE USED FOR FINAL PRICING OR FOR CONSTRUCTION. THEY ARE PRELIMINARY IN NATURE AND ARE SUBJECT TO CHANGE PRIOR TO ISSUANCE OF THE PROJECT CONSTRUCTION DOCUMENTS. ANY PRICING ATTAINED BY THE CONTRACTOR VIA THE USE OF THESE DOCUMENTS IS CONSIDERED TO BE AT THE RISK OF THE CONTRACTOR.

PROJECT:

CITY OF THORNTON
9500 CIVIC CENTER DRIVE
THORNTON, COLORADO 80229

CHERRY PARK IRRIGATION REHABILITATION, PROJECT 22-46B

11500 BIRCH DR,
THORNTON, CO
80233

DATE:	07/11/2025
DESIGNED:	JLW
DRAWN:	JLW
REVIEWED:	JLW
FIELD BOOK NO.:	-

SHEET TITLE:

IRRIGATION DETAILS

SHEET NUMBER:

IR2.4

PROJECT NO.: 0231420.00

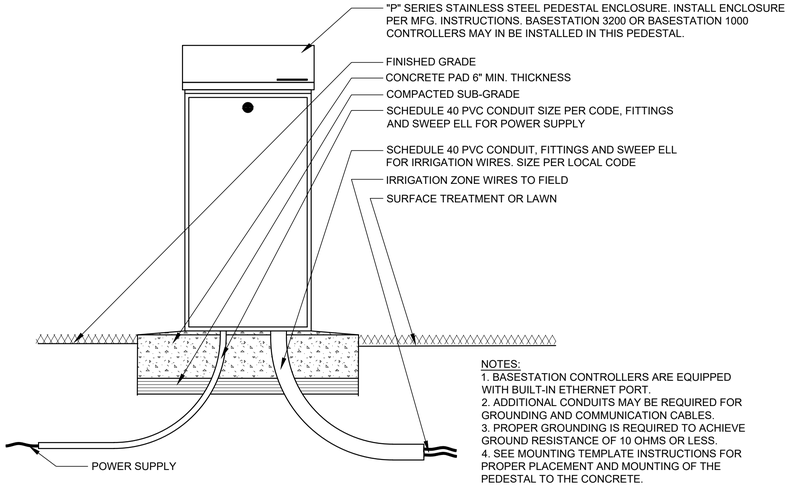

NOTES:
1. BASESTATION CONTROLLERS ARE EQUIPPED WITH BUILT-IN ETHERNET PORT.
2. ADDITIONAL CONDUITS MAY BE REQUIRED FOR GROUNDING AND COMMUNICATION CABLES.
3. PROPER GROUNDING IS REQUIRED TO ACHIEVE GROUND RESISTANCE OF 10 OHMS OR LESS.
4. SEE MOUNTING TEMPLATE INSTRUCTIONS FOR PROPER PLACEMENT AND MOUNTING OF THE PEDESTAL TO THE CONCRETE.

O BASELINE "CITY OF THORNTON" 2-WIRE CONTROLLER PACKAGE

SCALE: NTS

NOTE: EDGING WITHIN 3' TYP OF ALL SIDEWALKS SHALL BE FLUSH WITH THE CRUSHER FINES BOARDER MATERIAL SO TO PROVIDE SMOOTH, CONTINUOUS SURFACES FOR EASE OF ACCESS OF ALL MAINTENANCE EQUIPMENT.

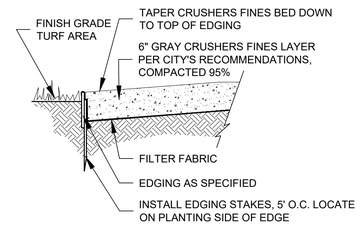

P TYPICAL CRUSHED GRANITE DETAIL

SCALE: NTS

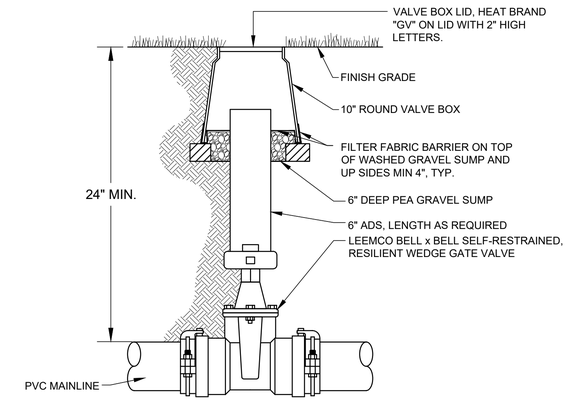

Q LMV-BB MAINLINE GATE VALVE DETAIL

SCALE: NTS

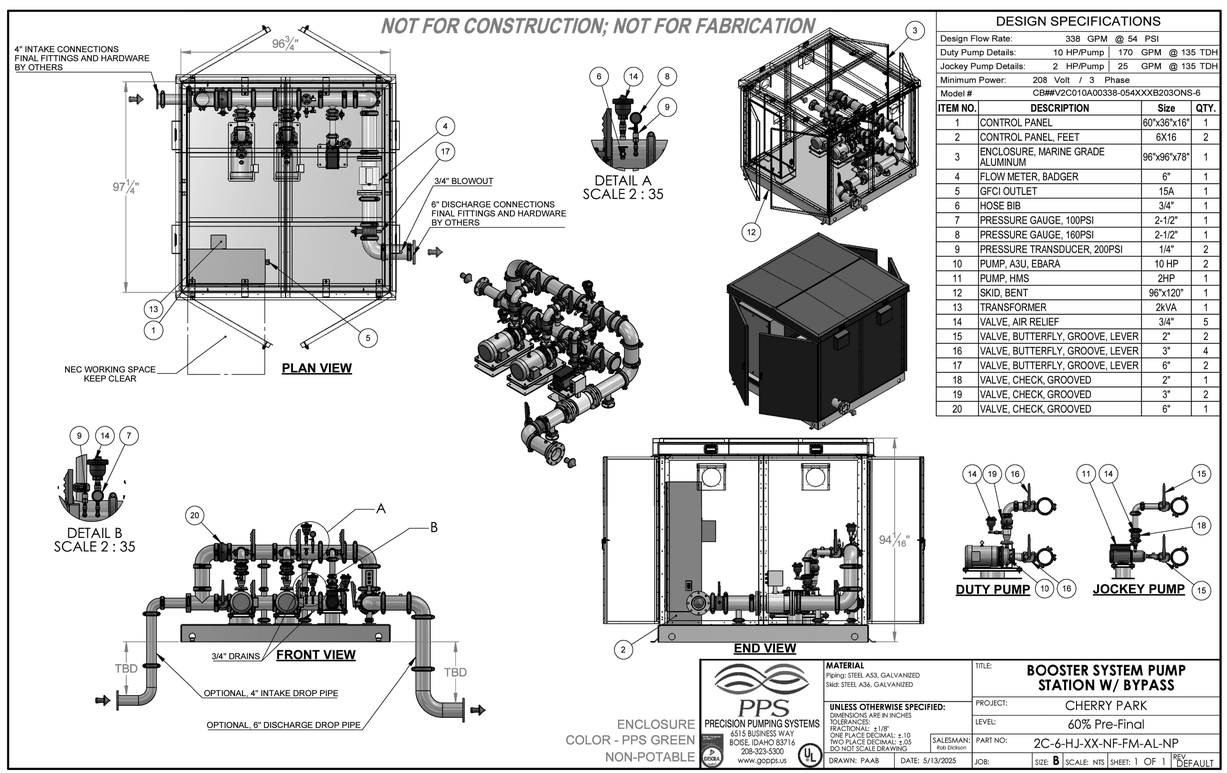

DESIGN SPECIFICATIONS

Design Flow Rate:	338 GPM @ 54 PSI		
Duty Pump Details:	10 HP/Pump	170 GPM @ 135 TDH	
Jockey Pump Details:	2 HP/Pump	25 GPM @ 135 TDH	
Minimum Power:	208 Volt / 3 Phase		
Model #	CB##V2C010A00338-054XXXB203ONS-6		

ITEM NO.	DESCRIPTION	Size	QTY.
1	CONTROL PANEL	60"x36"x16"	1
2	CONTROL PANEL, FEET	6X16	2
3	ENCLOSURE, MARINE GRADE ALUMINUM	96"x96"x78"	1
4	FLOW METER, BADGER	6"	1
5	GFCI OUTLET	15A	1
6	HOSE BIB	3/4"	1
7	PRESSURE GAUGE, 100PSI	2-1/2"	1
8	PRESSURE GAUGE, 160PSI	2-1/2"	1
9	PRESSURE TRANSDUCER, 200PSI	1/4"	2
10	PUMP, A3U, EBARA	10 HP	2
11	PUMP, HMS	2HP	1
12	SKID, BENT	96"x120"	1
13	TRANSFORMER	2kVA	1
14	VALVE, AIR RELIEF	3/4"	5
15	VALVE, BUTTERFLY, GROOVE, LEVER	2"	2
16	VALVE, BUTTERFLY, GROOVE, LEVER	3"	4
17	VALVE, BUTTERFLY, GROOVE, LEVER	6"	2
18	VALVE, CHECK, GROOVED	2"	1
19	VALVE, CHECK, GROOVED	3"	2
20	VALVE, CHECK, GROOVED	6"	1

R PPS PUMPING SYSTEMS (VIA DBC IRRIGATION COMPANY)

SCALE: NTS

FOR D.I.P.:

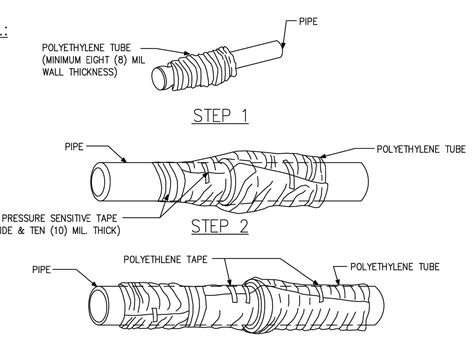

NOTE: POLYETHYLENE ENCASEMENT MATERIAL SHALL BE MANUFACTURED IN ACCORDANCE WITH CURRENT ASTM STANDARD. THE RAW MATERIAL USED TO MANUFACTURE POLYETHYLENE FILM SHALL BE TYPE I, CLASS A, GRADE E-1 IN ACCORDANCE WITH CURRENT ASTM STANDARD.

STEP 1 – PLACE TUBE OF POLYETHYLENE MATERIAL ON PIPE PRIOR TO LOWERING IT INTO TRENCH.

STEP 2 – PULL THE TUBE OVER THE LENGTH OF THE PIPE. TAPE TUBE TO PIPE AT JOINT. FOLD MATERIAL AROUND THE ADJACENT SPIGOT END AND WRAP WITH TAPE TO HOLD THE PLASTIC TUBE IN PLACE.

STEP 3 – OVERLAP FIRST TUBE WITH ADJACENT TUBE AND SECURE WITH PLASTIC ADHESIVE TAPE. THE POLYETHYLENE TUBE MATERIAL COVERING THE PIPE SHALL BE LOOSE. EXCESS MATERIAL SHALL BE NEATLY DRAWN UP AROUND THE PIPE BARREL, FOLDED ON TOP OF PIPE AND TAPED IN PLACE.

FOR STEEL:

BITUMINOUS MATERIAL IS TO BE USED FOR CORROSION PROTECTION ON ALL STEEL PIPES.

SOIL RESISTIVITY TESTS:

SOIL RESISTIVITY TESTS AND/OR ANY OTHER SOIL TESTS ARE REQUIRED WITH THE UTILIZATION OF METAL PIPING OR AT THE SOLE DISCRETION OF THE DEVELOPMENT ENGINEERING MANAGER. OTHER MEANS OF CORROSION PROTECTION MUST BE SPECIFICALLY APPROVED BY THE DEVELOPMENT ENGINEERING MANAGER. THE RESPONSIBLE PARTY SHALL INCUR THE COSTS OF ALL SOIL TESTING AS REQUIRED. N.T.S.

S CORROSION PROTECTION DETAIL

SCALE: NTS

Farnsworth GROUP
5613 DTC PARKWAY, SUITE 1100
GREENWOOD VILLAGE, COLORADO 80111
(303) 692-8838 / info@f-w.com
www.f-w.com
Engineers | Architects | Surveyors | Scientists

ISSUE:

#	DATE:	DESCRIPTION:

PREPARED UNDER THE DIRECT SUPERVISION OF JOSEPH L. WILSON, PLA, CID, CLIA, QWEL, WWLP, COLORADO LICENCE REGISTRATION LA-304

PRELIMINARY
NOT FOR CONSTRUCTION
THESE DRAWINGS AND/OR SPECIFICATIONS ARE BEING ISSUED FOR INFORMATION ONLY. THEY ARE NOT INTENDED TO BE USED FOR FINAL PRICING OR FOR CONSTRUCTION. THEY ARE PRELIMINARY IN NATURE AND ARE SUBJECT TO CHANGE PRIOR TO ISSUANCE OF THE PROJECT CONSTRUCTION DOCUMENTS. ANY PRICING ATTAINED BY THE CONTRACTOR VIA THE USE OF THESE DOCUMENTS IS CONSIDERED TO BE AT THE RISK OF THE CONTRACTOR.

PROJECT:

CITY OF THORNTON
9500 CIVIC CENTER DRIVE
THORNTON, COLORADO 80229

CHERRY PARK IRRIGATION REHABILITATION, PROJECT 22-46B

11500 BIRCH DR,
THORNTON, CO
80233

DATE:	07/11/2025
DESIGNED:	JLW
DRAWN:	JLW
REVIEWED:	JLW
FIELD BOOK NO.:	-

SHEET TITLE:

IRRIGATION DETAILS

SHEET NUMBER:

IR2.5

PROJECT NO.: 0231420.00

jgreen | z:\2023\0231420.00 – Cherry Park Irrigation Rehabilitation\04_drawings\IR\IR1.dwg – 0231420.00_20250523.dwg | 7/12/2026 4:03 PM |

Farnsworth GROUP

100% CONSTRUCTION DOCUMENT SET

NOT FOR CONSTRUCTION

CITY OF THORNTON

Cherry Park EROSION CONTROL PLANS

Project 22-46B

11500 Birch Drive, Thornton, CO 80233

DEVELOPMENT CONTACTS

CLIENT
CITY OF THORNTON
OPEN SPACE & PROJECT MANAGEMENT
9500 CIVIC CENTER DRIVE
THORNTON, CO 80229
303-255-7834
KELLY.ZUNIGA@THORNTONCO.GOV
CONTACT: KELLY ZUNIGA, PROJECT MANAGER

CIVIL ENGINEER
FARNSWORTH GROUP
5613 DTC PARKWAY, SUITE 1100
GREENWOOD VILLAGE, COLORADO 80111
PHONE: (303) 692-8838
JNEWELL@F-W.COM
CONTACT: JAY NEWELL, PE

LEGEND

- POP UP SPRINKLER HEADS
- CONTROL VALVES
- SOIL SENSOR
- ROTOR SPRINKLER HEAD
- IRRIGATION MAINLINE SLEEVE
- IRRIGATION SLEEVING
- IRRIGATION LATERAL LINES
- IRRIGATION SERVICE LINE
- IRRIGATION MAINLINE
- IRRIGATION MAINLINE
- IRRIGATION LATERAL LINE
- EX. CURB & GUTTER
- EX. FENCE
- EX. CHAIN FENCE
- SAWCUT LINE
- CHAIN-LINK FENCE
- SPLIT RAIL WOOD FENCE
- BARBED WIRE FENCE
- ELECTRIC LINE
- TELECOMMUNICATIONS LINE
- WATER LINE
- STORM SEWER LINE
- SANITARY SEWER LINE
- TREE DRIPLINE
- IRON ROD
- WOOD POST
- MAIL BOX POLE
- BASKETBALL POLE
- POST - BOLLARD
- EXISTING CONTOURS
- SIGN
- PICNIC TABLE
- BENCH
- GARBAGE CAN
- SANITARY SEWER MANHOLE
- STORM SEWER MANHOLE
- INLET-SQUARE
- INLET - RECTANGLE
- INLET - CURB TYPE
- WATER MANHOLE
- WATER METER
- WATER VALVE
- WATER VENT - RISER
- FIRE HYDRANT
- IRRIGATION CONTROL BOX
- BACK FLOW PREVENTER
- ELECTRIC LINE MARKER POST
- ELECTRIC METER
- ELECTRIC VAULT
- ELECTRIC PEDESTAL
- ELECTRIC OUTLET
- ELECTRIC LIGHT - POST
- ELECTRIC LIGHT - AREA / YARD
- ELECTRIC LIGHT - PARKING LOT
- ELECTRIC LIGHT - STREET
- ELECTRIC TRANSFORMER
- ELECTRIC SHUTOFF
- COMMUNICATIONS PEDESTAL
- ANTENNA
- FIBER OPTIC PEDESTAL
- UTILITY VAULT
- DECIDUOUS TREE
- CONIFEROUS TREE
- TREE STUMP
- BUILDING LINE

LOCATION MAP

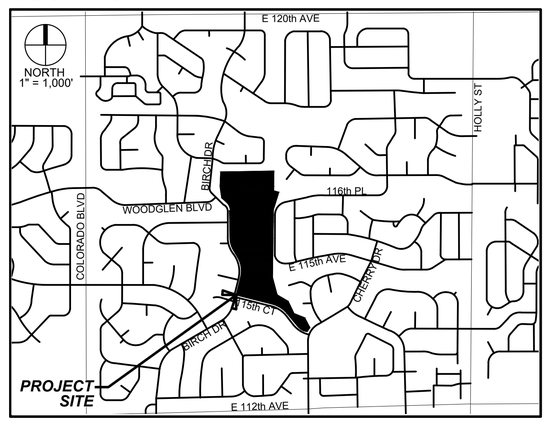

CITY OF THORNTON

KELLY ZUNIGA (PROJECT MANAGER) DATE

BOB KEES DATE
(DEPUTY DIRECTOR - PARKS, RECREATION, AND COMMUNITY PROGRAMS)

BENCHMARK

AS PROVIDED ON THE ALTA/NSPS LAND TITLE SURVEY PREPARED BY WASHBURN LAND SURVEYING, LLC; DATED 12/07/17:

"ELEVATIONS SHOWN ARE BASED ON NGS BENCHMARK KK1407. FOUND 2" ALUMINUM CAP LOCATED NORTH OF THE INTERSECTION OF W. 104TH AVE AND URA LANE. SAID BENCHMARK HAS A PUBLISHED ELEVATION OF 5516.87 NAVD88"

INDEX OF DRAWINGS

C4.00	EROSION CONTROL COVER
C4.01	EROSION CONTROL GENERAL NOTES
C4.11	EROSION CONTROL INITIAL
C4.12	EROSION CONTROL INITIAL
C4.13	EROSION CONTROL INITIAL
C4.14	EROSION CONTROL INITIAL
C4.15	EROSION CONTROL INITIAL
C4.21	EROSION CONTROL INTERIM
C4.22	EROSION CONTROL INTERIM
C4.23	EROSION CONTROL INTERIM
C4.24	EROSION CONTROL INTERIM
C4.25	EROSION CONTROL INTERIM
C4.91	EROSION CONTROL DETAILS
C4.92	EROSION CONTROL DETAILS

CONSTRUCTION SEQUENCE:

1. MEET ALL BMP PROTECTION, PRE-CONSTRUCTION MEETING, AND/OR OTHER CITY, COUNTY, STATE OR FEDERAL PERMIT REQUIREMENTS.
2. INSTALL INITIAL, PERIMETER BMP CONTROLS(CF,VTC,IP,SCL,RS) PRIOR TO ANY LAND DISTURBANCE FOR PHASE 1, INCLUDING SSA AND CWA (SEE PLANS).
3. BEGIN CONSTRUCTION.
4. ADJUST BMPS AS NECESSARY TO MAINTAIN EROSION AND SEDIMENTATION PROTECTION THROUGHOUT CONSTRUCTION. INSTALL ADDITIONAL INTERIM BMPS AND FINAL STABILIZATION TO PROCEED AS FOLLOWS:

   INTERIM PHASE 1
   FINAL PHASE 1
   INITIAL PHASE 2
   INTERIM PHASE 2
   FINAL PHASE 2
   INITIAL PHASE 3
   INTERIM PHASE 3
   FINAL PHASE 3
   INITIAL PHASE 4
   INTERIM PHASE 4
   FINAL PHASE 4
5. PERFORM CURB & GUTTER, SIDEWALK, AND PAVING OPERATIONS. INSTALL ADDITIONAL BMPS ACCORDING TO PHASED SEQUENCE.
6. ADJUST BMPS AS NECESSARY TO COMPLETE ALL WORK ACCORDING TO PHASED SEQUENCE.
7. FINALLY STABLIZE ALL DISTURBANCE(S) ACCORDING TO PHASED SEQUENCE.
8. REMOVE BMPS ONCE SITE REACHES FINAL STABILIZATION ACCORDING TO PHASED SEQUENCE.

KEY MAP

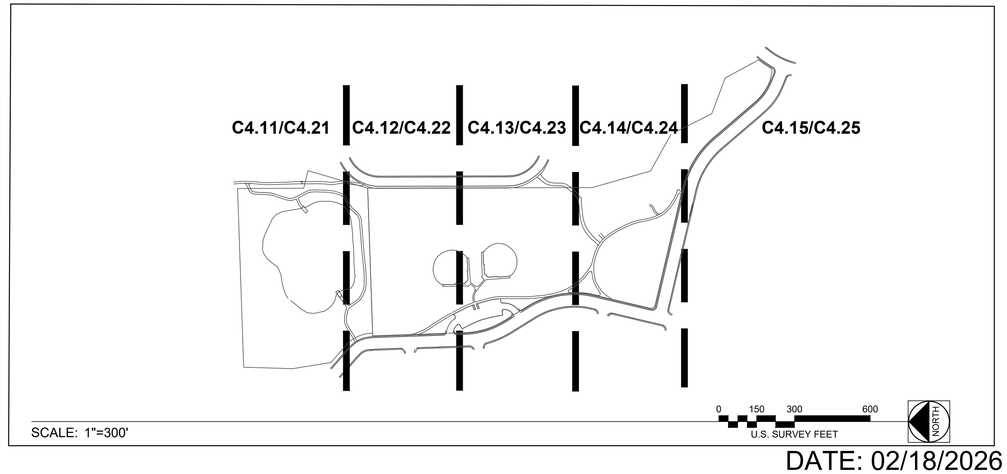

SCALE: 1"=300'

PROJECT NO.: 0231420.00

DATE: 02/18/2026

Farnsworth GROUP

100% CONSTRUCTION DOCUMENT SET
CHERRY PARK IRRIGATION REHABILITATION

CITY OF THORNTON

| sgreen | J:\2023\0231420.00 - Cherry Park Irrigation Rehabilitation\04_drawings\DWG\C1_Erosion - 0231420.00.dwg | 1/13/2026 7:12 PM |

GENERAL NOTES

1. THE GENERAL CONTRACTOR IS RESPONSIBLE FOR ELIMINATING OR REDUCING, TO THE GREATEST EXTENT PRACTICAL, ALL POLLUTANTS (INCLUDING DUST, SEDIMENT, AND HAZARDOUS MATERIALS) FROM EXITING THE CONSTRUCTION SITE AND ENTERING ANY PUBLIC WATERS OR MUNICIPAL SEPARATE STORM SEWER SYSTEM. ANY ADVERSE ENVIRONMENTAL IMPACTS TO WATERWAYS, WETLANDS, STORM SEWER SYSTEMS, OTHER PROPERTIES, OR RIGHTS-OF-WAY RESULTING FROM WORK DONE AS A PART OF THIS PROJECT SHALL BE MITIGATED BY THE CONTRACTOR AT THEIR SOLE EXPENSE.

2. AT A MINIMUM THE CONTROL MEASURES INDICATED ON THIS PLAN SHALL BE LOCATED, INSTALLED, AND MAINTAINED IN EFFECTIVE OPERATING CONDITION THROUGHOUT THE LIFE OF THE CONSTRUCTION PROJECT AND UNTIL FINAL STABILIZATION OF THE SITE IS COMPLETE. THE CONTRACTOR IS RESPONSIBLE FOR SCHEDULING CONTROL MEASURE IMPLEMENTATION APPROPRIATE TO PROJECT PHASING (E.G. PERIMETER CONTROLS SHOULD BE IN PLACE PRIOR TO ANY EARTH DISTURBANCE ON-SITE).

3. THE CONTRACTOR SHALL BE FAMILIAR AND COMPLY WITH THE STATE AND LOCAL HAZARDOUS SPILL REPORTING REQUIREMENTS. THE CONTRACTOR SHALL HAVE A SPILL KIT ON-SITE AT ALL TIMES AND AVAILABLE FOR IMMEDIATE USE. ALL HAZARDOUS SUBSTANCES, MATERIALS CONTAMINATED BY SPILLS, OR SUPPLIES USED TO CLEAN UP SAME SHALL BE PROPERLY DISPOSED OF OFF-SITE. NO WASTES OF ANY TYPE MAY BE BURIED OR INCINERATED ON-SITE.

4. WATER USED IN THE CLEANING OF CEMENT DELIVERY TRUCK CHUTES SHALL BE DISCHARGED TO A PRE-DEFINED CONTAINMENT AREA ON THE JOB SITE. ONCE WATER HAS DISCHARGED TO THE GROUND THE REMAINING CONCRETE WASTES SHALL BE HAULED FROM THE SITE AND PROPERLY DISPOSED OF. NO DISCHARGE OF WATER CONTAINING CEMENT (OR OTHER MASONRY SLURRIES) MAY LEAVE THE SITE AS SURFACE FLOW OR ENTER A STORM SEWER SYSTEM ON OR ADJACENT THERETO.

5. PAVED SURFACES WHICH ARE ADJACENT TO THE CONSTRUCTION SITE SHALL BE KEPT CLEAR OF TRACKED SEDIMENTS BY REGULAR SWEEPING. WATER FLUSHING OF PAVED SURFACES IS PROHIBITED.

6. THE CONTRACTOR SHALL ENSURE ALL MATERIALS IMPORTED OR EXPORTED FROM THE SITE ARE PROPERLY SECURED AND COVERED TO PREVENT LOSS DURING TRANSPORT.

7. THE CONTRACTOR IS RESPONSIBLE FOR BEING AWARE OF ANY STATE OR LOCAL CONSTRUCTION STORMWATER PERMITTING REQUIREMENTS. SHOULD PROJECT CONDITIONS CHANGE TO WARRANT COVERAGE (E.G. DISTURBANCE AREA INCREASE, COMMON DEVELOPMENT RELATIONSHIP, RECEIVING WATER CLASSIFICATION, ETC…) THE CONTRACTOR IS RESPONSIBLE FOR DEVELOPING AND IMPLEMENTING A STORMWATER MANAGEMENT PLAN. THE CONTRACTOR, ALONG WITH THE OWNER, MUST APPLY FOR, OBTAIN, AND COMPLY WITH COVERAGE UNDER THE CDPS COR400000 GENERAL PERMIT AS WELL AS ANY SIMILAR LOCAL PERMIT.

8. FOR THE STAGE STORAGE AREA AND VEHICLE TRACKING CONTROL, THE CONTRACTOR SHALL UTILIZE THE EXISTING PAVEMENT TO THE GREATEST PRACTICAL (PRE-ROLLED MATCHS,ETC.). OTHERWIS, REFER TO THE STANDARD DETAILS. NOTE: THE EXISTING PAVEMENT IS NOT ITSELF THE TRACKING CONTROL.

9. THE CONTRACTOR MAY UTILIZE A PRE - FABRICATED CONCRETE WASHOUT BASIN IF IT BEING PLACED ON EXISTING PAVEMENT. OTHERWISE, REFER TO THE STANDARD DETAIL.

10. ALL MATERIALS, WORKMANSHIP, AND CONSTRUCTION OF IMPROVEMENTS SHALL MEET OR EXCEED THE GOVERNING CITY, COUNTY AND/OR STATE AND APPLICABLE UTILITY DISTRICT STANDARDS AND SPECIFICATIONS, AND APPLICABLE STATE AND FEDERAL REGULATIONS. WHERE THERE IS CONFLICT BETWEEN THESE PLANS AND ANY APPLICABLE STANDARDS, THE HIGHER QUALITY STANDARD SHALL APPLY. ALL WORK SHALL BE INSPECTED AND APPROVED BY THE CITY AND APPLICABLE UTILITY DISTRICT(S).

11. THE CONTRACTOR SHALL HAVE ONE (1) SIGNED COPY OF THE APPROVED PLANS, ONE (1) COPY OF THE APPROPRIATE STANDARDS AND SPECIFICATIONS, AND A COPY OF ANY PERMITS AND EXTENSION AGREEMENTS NEEDED FOR THE JOB ON SITE AT ALL TIMES.

12. ALL REFERENCES TO ANY PUBLISHED STANDARDS SHALL REFER TO THE LATEST REVISION OF SAID STANDARDS, UNLESS SPECIFICALLY STATED OTHERWISE.

13. THE CONTRACTOR IS RESPONSIBLE FOR PROVIDING ALL LABOR AND MATERIALS NECESSARY FOR THE COMPLETION OF THE INTENDED IMPROVEMENTS SHOWN ON THESE DRAWINGS OR DESIGNATED TO BE PROVIDED, INSTALLED, CONSTRUCTED, REMOVED, AND RELOCATED UNLESS SPECIFICALLY NOTED OTHERWISE.

14. THE GENERAL CONTRACTOR SHALL BE RESPONSIBLE FOR RECEIVING, UNLOADING, STORING, AND UNCRATING ALL EQUIPMENT FURNISHED BY THE OWNER/DEVELOPER AND DELIVERED TO THE SITE.

15. THE CONTRACTOR IS SPECIFICALLY CAUTIONED THAT THE LOCATION AND/OR ELEVATION OF EXISTING UTILITIES, AS SHOWN ON THESE PLANS, IS BASED ON RECORDS OF THE VARIOUS UTILITY COMPANIES AND, WHERE POSSIBLE, MEASUREMENTS TAKEN IN THE FIELD. THE INFORMATION IS NOT TO BE RELIED UPON AS BEING EXACT OR COMPLETE. THE CONTRACTOR MUST CALL THE LOCAL UTILITY LOCATION CENTER AT LEAST 48 HOURS BEFORE ANY EXCAVATION TO REQUEST EXACT FIELD LOCATIONS OF THE UTILITIES. PRIOR TO CONSTRUCTION THE CONTRACTOR SHALL VERIFY PERTINENT LOCATIONS AND ELEVATIONS, ESPECIALLY AT THE CONNECTION POINTS AND AT POTENTIAL UTILITY CONFLICTS. IT SHALL BE THE RESPONSIBILITY OF THE CONTRACTOR TO RELOCATE ALL EXISTING UTILITIES THAT CONFLICT WITH THE PROPOSED IMPROVEMENTS SHOWN ON THESE PLANS.

16. THE CONTRACTOR SHALL BE RESPONSIBLE FOR OBTAINING ALL NECESSARY PERMITS AND LICENSES FOR WORK INCLUDING, BUT NOT LIMITED TO DEMOLITION, STREET CUTS, UTILITY INTERFERENCES, TRAFFIC CONTROL, GRADING, AND UTILITY FROM ALL APPLICABLE AGENCIES; AND FOR COMPLYING WITH ALL PROVISIONS INCLUDED THEREIN.

17. THE CONTRACTOR SHALL BE RESPONSIBLE FOR ALL ASPECTS OF PROJECT SAFETY INCLUDING, BUT NOT LIMITED TO, EXCAVATION, TRENCHING, SHORING, TRAFFIC CONTROL, AND SECURITY.

18. THE CONTRACTOR SHALL INSTALL AND MAINTAIN CONSTRUCTION FENCE PRIOR TO, AND THROUGHOUT CONSTRUCTION.

19. THE CONTRACTOR SHALL SUBMIT A TRAFFIC CONTROL PLAN, IN ACCORDANCE WITH THE M.U.T.C.D. TO THE APPROPRIATE RIGHT-OF-WAY AUTHORITY (CITY, COUNTY, OR STATE) FOR APPROVAL, PRIOR TO ANY CONSTRUCTION ACTIVITIES WITHIN, OR AFFECTING, THE RIGHT-OF-WAY. THE CONTRACTOR SHALL BE RESPONSIBLE FOR PROVIDING ANY AND ALL TRAFFIC CONTROL DEVICES AS MAY BE REQUIRED BY THE CONSTRUCTION ACTIVITIES.

20. THE CONTRACTOR SHALL BE RESPONSIBLE FOR COORDINATING ALL WORK, INSPECTIONS, AND CERTIFICATIONS AS REQUIRED BY THE CITY, STATE, OR LOCAL DISTRICTS. ALL NECESSARY INSPECTIONS AND/OR CERTIFICATIONS REQUIRED SHALL BE PERFORMED PRIOR TO ANNOUNCED BUILDING POSSESSION AND THE FINAL CONNECTION OF SERVICES. THE CONTRACTOR SHALL BE RESPONSIBLE FOR ALL COST ASSOCIATED WITH INSPECTION AND CERTIFICATION UNLESS OTHERWISE ARRANGED WITH THE OWNER/DEVELOPER; AND SHALL COORDINATE ALL CERTIFICATIONS, AND PROVIDE FIELD SURVEYED AS-BUILT INFORMATION FOR REVIEW BY THE OWNER/DEVELOPER AND/OR ENGINEER AS EARLY AS POSSIBLE IN THE CONSTRUCTION SCHEDULE TO AVOID POTENTIAL DELAYS.

21. THE CONTRACTOR SHALL NOTIFY THE GOVERNING CITY, COUNTY, AND/OR STATE AND LOCAL UTILITY COMPANIES/DISTRICTS AT LEAST 48 HOURS PRIOR TO THE START OF ANY CONSTRUCTION.

22. THE CONTRACTOR SHALL NOTIFY THE GOVERNING CITY, COUNTY, AND/OR STATE AND LOCAL UTILITY COMPANIES/DISTRICTS AT LEAST 48 HOURS PRIOR TO THE START OF ANY EARTH DISTURBING ACTIVITY.

23. ALL STRUCTURAL EROSION CONTROL MEASURES SHALL BE INSTALLED AT THE LIMITS OF CONSTRUCTION, PRIOR TO ANY GROUND-DISTURBING ACTIVITY. ALL EROSION CONTROL MEASURES SHALL BE MAINTAINED IN GOOD REPAIR BY THE CONTRACTOR UNTIL SUCH TIME AS THE ENTIRE DISTURBED AREA IS STABILIZED WITH HARD SURFACE OR PERMANENT LANDSCAPING. THE CONTRACTOR IS RESPONSIBLE FOR REFERRING TO ANY EROSION AND SEDIMENT CONTROL, STORMWATER MANAGEMENT, STORMWATER POLLUTION PREVENTION, OR SIMILAR PLAN AND/OR NARRATIVE AND ASSOCIATED PERMITS INCLUDING, BUT NOT LIMITED TO GRADING PERMITS; AND COMPLYING WITH THE REQUIREMENTS THEREIN.

24. THE CONTRACTOR SHALL BE RESPONSIBLE FOR KEEPING ROADWAYS FREE AND CLEAR OF ALL CONSTRUCTION DEBRIS AND DIRT TRACKED FROM THE SITE.

25. THE CONTRACTOR SHALL BE RESPONSIBLE FOR THE RESTORATION OF ANY EXISTING IMPROVEMENTS INCLUDING, BUT NOT LIMITED TO STREET PAVEMENT, FENCES, SOD, LANDSCAPING, SPRINKLER SYSTEMS, AND UTILITIES DISTURBED DURING CONSTRUCTION TO THEIR ORIGINAL LOCATION AND CONDITION.

26. ALL WORK WITHIN THE PUBLIC RIGHT-OF-WAY SHALL BE DONE IN ACCORDANCE WITH THE GOVERNING AUTHORITY'S STANDARDS AND SPECIFICATIONS.

27. EXISTING DRAINAGE STRUCTURES SHALL BE INSPECTED AND REPAIRED AS NEEDED, AND EXISTING PIPES CLEANED OUT TO REMOVE ALL SILT AND DEBRIS.

Farnsworth
GROUP

5613 DTC PARKWAY, SUITE 1100
GREENWOOD VILLAGE, COLORADO 80111
(303) 692-8838 / info@f-w.com

www.f-w.com
Engineers | Architects | Surveyors | Scientists

ISSUE:

#	DATE:	DESCRIPTION:

PREPARED UNDER THE DIRECT SUPERVISION OF JAY M. NEWELL,PE, COLORADO LICENSE REGISTRATION NO.35219

PRELIMINARY
NOT FOR CONSTRUCTION

THESE DRAWINGS AND/OR SPECIFICATIONS ARE BEING ISSUED FOR INFORMATION ONLY. THEY ARE NOT INTENDED TO BE USED FOR FINAL PRICING OR FOR CONSTRUCTION. THEY ARE PRELIMINARY IN NATURE AND ARE SUBJECT TO CHANGE PRIOR TO ISSUANCE OF THE PROJECT CONSTRUCTION DOCUMENTS. ANY PRICING ATTAINED BY THE CONTRACTOR VIA THE USE OF THESE DOCUMENTS IS CONSIDERED TO BE AT THE RISK OF THE CONTRACTOR.

PROJECT:

CITY OF THORNTON
9500 CIVIC CENTER DRIVE
THORNTON, COLORADO 80229

CHERRY PARK IRRIGATION REHABILITATION, PROJECT 22-46B

11500 BIRCH DR,
THORNTON, CO
80233

DATE:	07/11/2025
DESIGNED:	JASP
DRAWN:	JASP
REVIEWED:	JMN
FIELD BOOK NO.:	-

SHEET TITLE:

EROSION CONTROL GENERAL NOTES

SHEET NUMBER:

C4.01

PROJECT NO.: 0231420.00

jgreen | J:\2023\0231420.00 - Cherry Park Irrigation Rehabilitation\04_drawings\DWG\C1_Erosion - 0231420.00.dwg | 1/13/2026 2:12 PM |

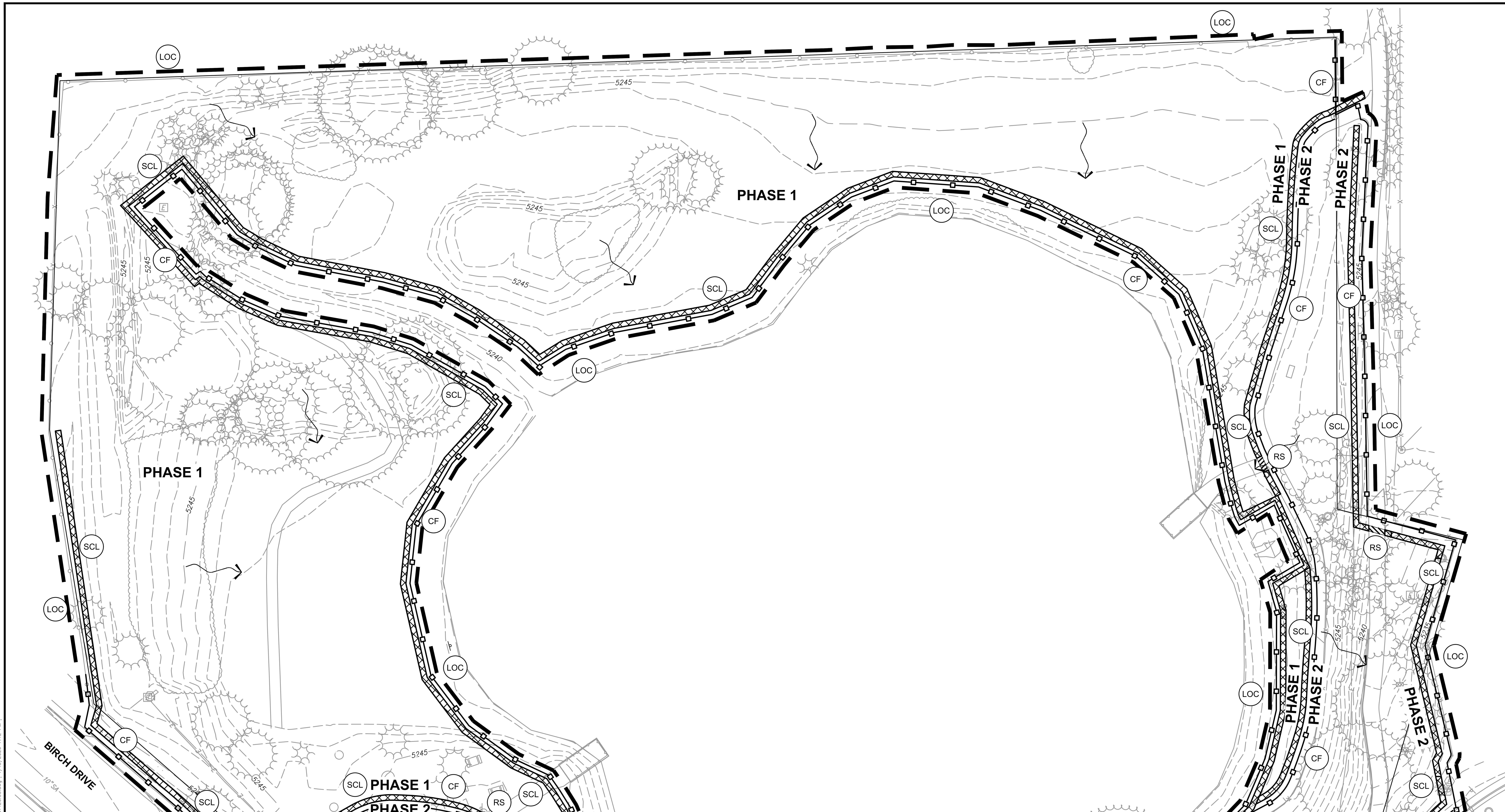

1 PLAN

SCALE: 1"=30'

0 15 30 60

U.S. SURVEY FEET

NORTH

CAUTION - NOTICE TO CONTRACTOR

THE CONTRACTOR IS SPECIFICALLY CAUTIONED THAT THE LOCATION AND/OR ELEVATION OF EXISTING UTILITIES AS SHOWN ON THESE PLANS IS BASED ON RECORDS OF THE VARIOUS UTILITY COMPANIES AND, WHERE POSSIBLE, MEASUREMENTS TAKEN IN THE FIELD. THE INFORMATION IS NOT TO BE RELIED ON AS BEING EXACT OR COMPLETE. THE CONTRACTOR MUST CALL THE LOCAL UTILITY LOCATION CENTER AT LEAST 48 HOURS BEFORE ANY EXCAVATION TO REQUEST EXACT FIELD LOCATIONS OF THE UTILITIES. IT SHALL BE THE RESPONSIBILITY OF THE CONTRACTOR TO RELOCATE ALL EXISTING UTILITIES WHICH CONFLICT WITH THE PROPOSED IMPROVEMENTS SHOWN ON THE PLANS.

THE CONTRACTOR SHALL BE RESPONSIBLE FOR ANY DAMAGE TO EXISTING IMPROVEMENTS AND UTILITIES AND SHALL REPAIR ANY DAMAGE AT HIS EXPENSE.

811 Know what's below. Call before you dig.

LEGEND

- FLOW DIRECTION ARROW
- RECEIVING WATER ARROW
- LIMIT OF CONSTRUCTION (LOC)
- VEHICLE TRACKING CONTROL (VTC)
- CONSTRUCTION FENCE (CF)
- SEDIMENT CONTROL LOG/ ROCK SOCKS (SCL) (RS)
- INLET PROTECTION (IP)

GENERAL NOTES

1. REFER TO SHEET 4.01 FOR GENERAL NOTES.
2. REFER TO SHEET C4.00 FOR OVERALL LEGEND

KEY MAP

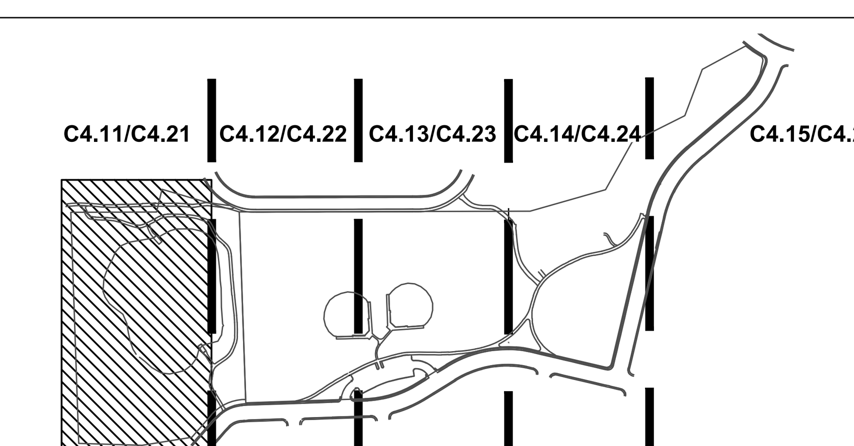

SCALE: 1"=500'

0 250 500 1000

U.S. SURVEY FEET

NORTH

Farnsworth GROUP

5613 DTC PARKWAY, SUITE 1100
GREENWOOD VILLAGE, COLORADO 80111
(303) 692-8838 / info@f-w.com

www.f-w.com
Engineers | Architects | Surveyors | Scientists

ISSUE:

#	DATE:	DESCRIPTION:

PREPARED UNDER THE DIRECT SUPERVISION OF JAY M. NEWELL,PE, COLORADO LICENSE REGISTRATION NO.35219

PRELIMINARY
NOT FOR CONSTRUCTION

THESE DRAWINGS AND/OR SPECIFICATIONS ARE BEING ISSUED FOR INFORMATION ONLY. THEY ARE NOT INTENDED TO BE USED FOR FINAL PRICING OR FOR CONSTRUCTION. THEY ARE PRELIMINARY IN NATURE AND ARE SUBJECT TO CHANGE PRIOR TO ISSUANCE OF THE PROJECT CONSTRUCTION DOCUMENTS. ANY PRICING ATTAINED BY THE CONTRACTOR VIA THE USE OF THESE DOCUMENTS IS CONSIDERED TO BE AT THE RISK OF THE CONTRACTOR.

PROJECT:

CITY OF THORNTON
9500 CIVIC CENTER DRIVE
THORNTON, COLORADO 80229

CHERRY PARK IRRIGATION REHABILITATION, PROJECT 22-46B

11500 BIRCH DR,
THORNTON, CO
80233

DATE:	07/11/2025
DESIGNED:	JASP
DRAWN:	JASP
REVIEWED:	JMN
FIELD BOOK NO.:	-

SHEET TITLE:

EROSION CONTROL (INITIAL)

SHEET NUMBER:

C4.11

PROJECT NO.: 0231420.00

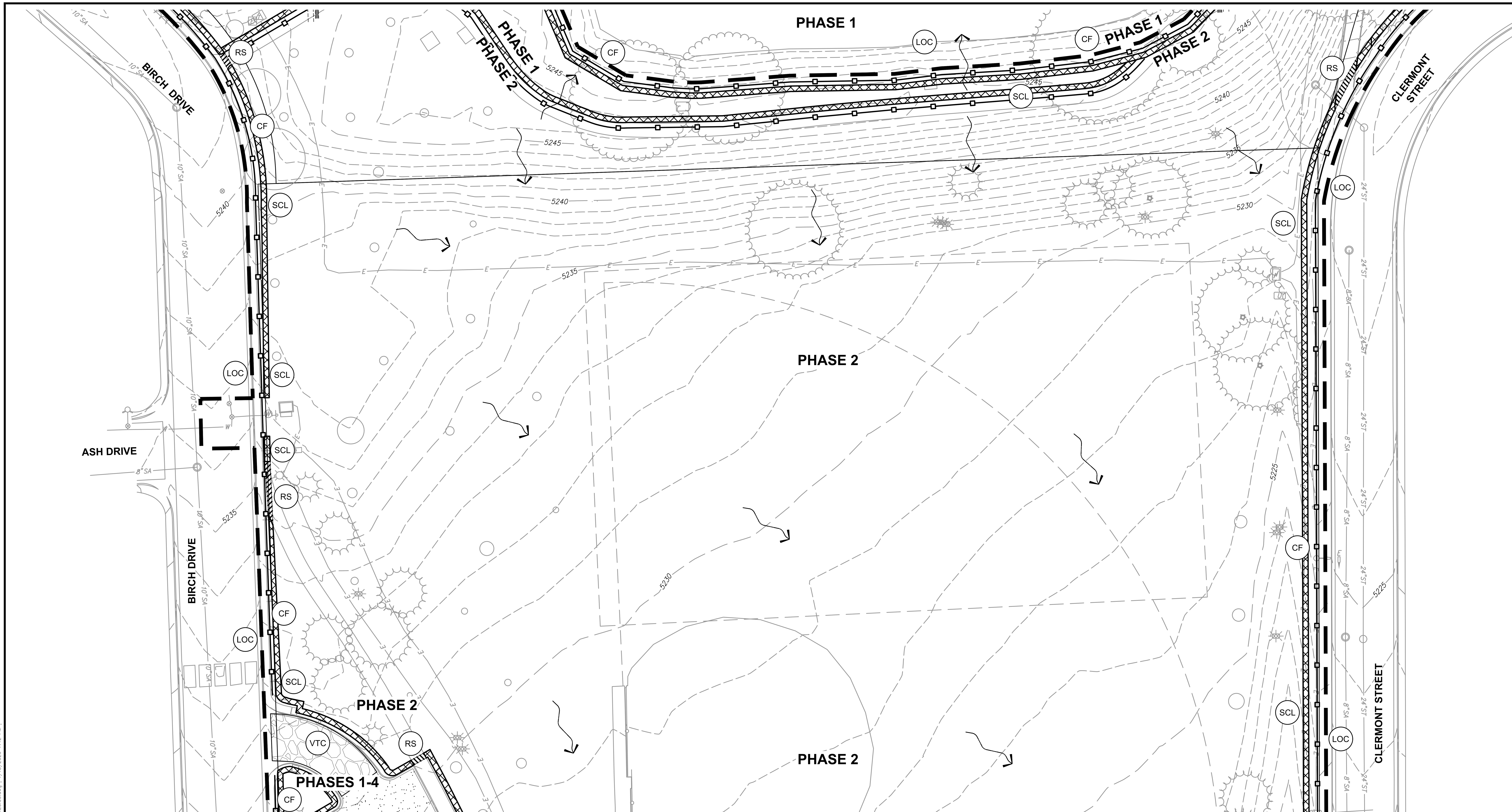

1 **PLAN**
SCALE: 1"=30'

0 15 30 60
U.S. SURVEY FEET
NORTH

CAUTION - NOTICE TO CONTRACTOR

THE CONTRACTOR IS SPECIFICALLY CAUTIONED THAT THE LOCATION AND/OR ELEVATION OF EXISTING UTILITIES AS SHOWN ON THESE PLANS IS BASED ON RECORDS OF THE VARIOUS UTILITY COMPANIES AND, WHERE POSSIBLE, MEASUREMENTS TAKEN IN THE FIELD. THE INFORMATION IS NOT TO BE RELIED ON AS BEING EXACT OR COMPLETE. THE CONTRACTOR MUST CALL THE LOCAL UTILITY LOCATION CENTER AT LEAST 48 HOURS BEFORE ANY EXCAVATION TO REQUEST EXACT FIELD LOCATIONS OF THE UTILITIES. IT SHALL BE THE RESPONSIBILITY OF THE CONTRACTOR TO RELOCATE ALL EXISTING UTILITIES WHICH CONFLICT WITH THE PROPOSED IMPROVEMENTS SHOWN ON THE PLANS.

THE CONTRACTOR SHALL BE RESPONSIBLE FOR ANY DAMAGE TO EXISTING IMPROVEMENTS AND UTILITIES AND SHALL REPAIR ANY DAMAGE AT HIS EXPENSE.

811
Know what's **below.**
Call before you dig.

LEGEND

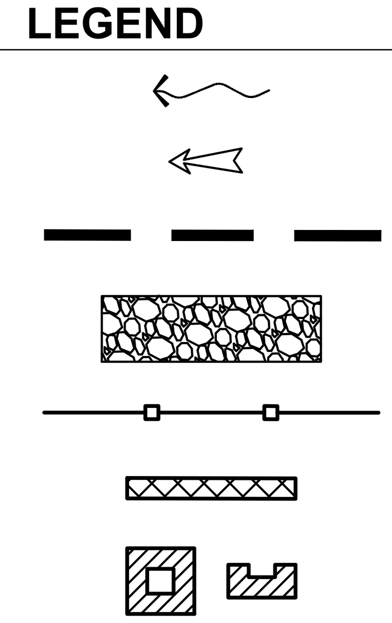

- FLOW DIRECTION ARROW
- RECEIVING WATER ARROW
- LIMIT OF CONSTRUCTION (LOC)
- VEHICLE TRACKING CONTROL (VTC)
- CONSTRUCTION FENCE (CF)
- SEDIMENT CONTROL LOG/ ROCK SOCKS (SCL) (RS)
- INLET PROTECTION (IP)

GENERAL NOTES

1. REFER TO SHEET 4.01 FOR GENERAL NOTES.
2. REFER TO SHEET C4.00 FOR OVERALL LEGEND

KEY MAP

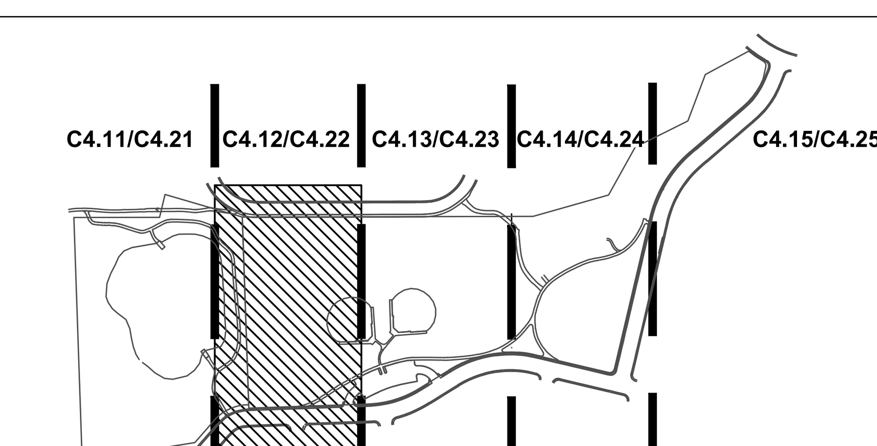

SCALE: 1"=500'

0 250 500 1000
U.S. SURVEY FEET
NORTH

Farnsworth GROUP
5613 DTC PARKWAY, SUITE 1100
GREENWOOD VILLAGE, COLORADO 80111
(303) 692-8838 / info@f-w.com
www.f-w.com
Engineers | Architects | Surveyors | Scientists

ISSUE:
DATE: DESCRIPTION:

PREPARED UNDER THE DIRECT SUPERVISION OF JAY M. NEWELL,PE, COLORADO LICENSE REGISTRATION NO.35219

PRELIMINARY
NOT FOR CONSTRUCTION
THESE DRAWINGS AND/OR SPECIFICATIONS ARE BEING ISSUED FOR INFORMATION ONLY. THEY ARE NOT INTENDED TO BE USED FOR FINAL PRICING OR FOR CONSTRUCTION. THEY ARE PRELIMINARY IN NATURE AND ARE SUBJECT TO CHANGE PRIOR TO ISSUANCE OF THE PROJECT CONSTRUCTION DOCUMENTS. ANY PRICING ATTAINED BY THE CONTRACTOR VIA THE USE OF THESE DOCUMENTS IS CONSIDERED TO BE AT THE RISK OF THE CONTRACTOR.

PROJECT:
CITY OF THORNTON
9500 CIVIC CENTER DRIVE
THORNTON, COLORADO 80229

CHERRY PARK IRRIGATION REHABILITATION, PROJECT 22-46B

11500 BIRCH DR,
THORNTON, CO
80233

DATE:	07/11/2025
DESIGNED:	JASP
DRAWN:	JASP
REVIEWED:	JMN
FIELD BOOK NO.:	-

SHEET TITLE:
EROSION CONTROL (INITIAL)

SHEET NUMBER:
C4.12

PROJECT NO.: 0231420.00

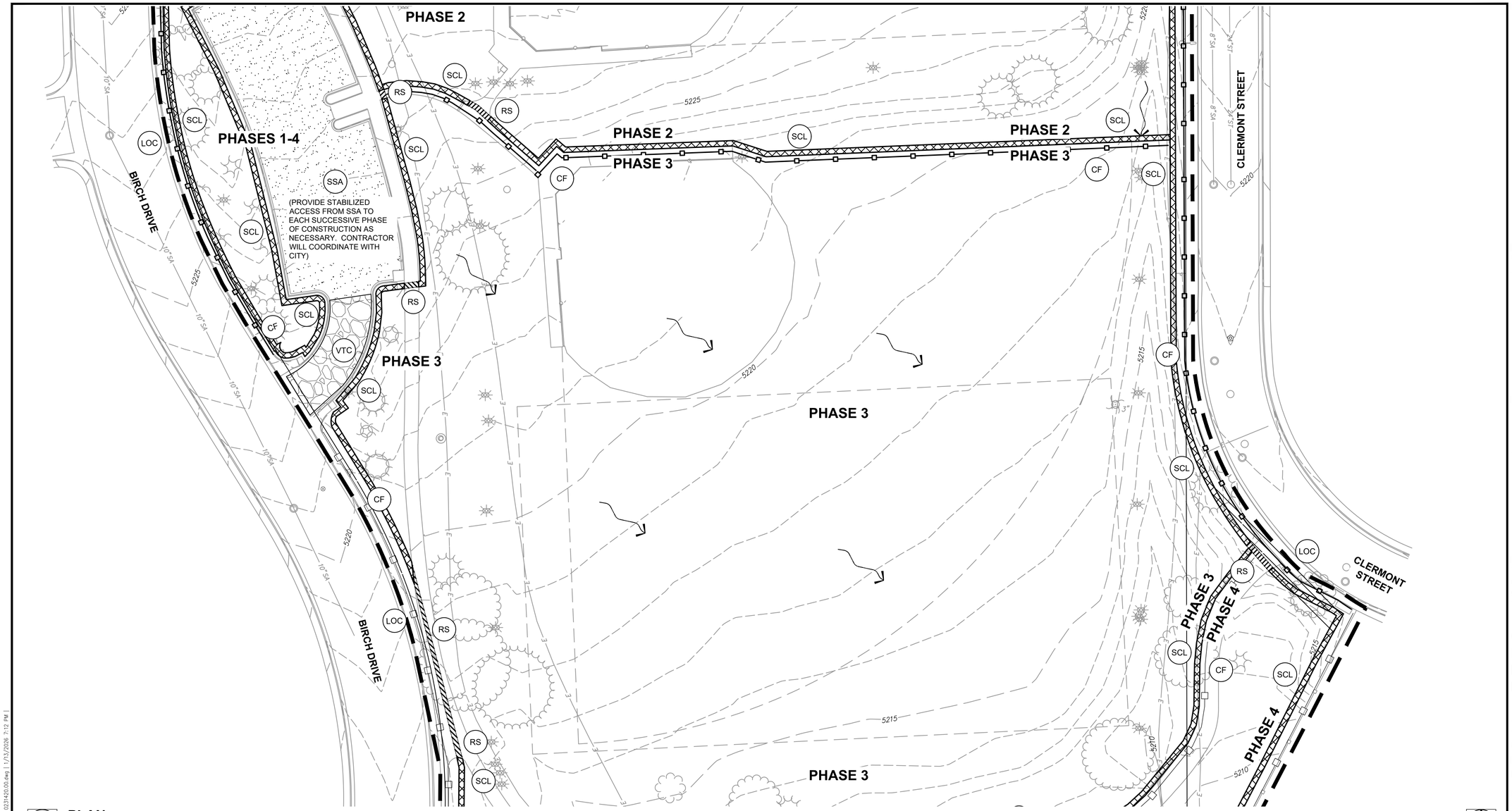

1 **PLAN**
SCALE: 1"=30'

CAUTION - NOTICE TO CONTRACTOR

THE CONTRACTOR IS SPECIFICALLY CAUTIONED THAT THE LOCATION AND/OR ELEVATION OF EXISTING UTILITIES AS SHOWN ON THESE PLANS IS BASED ON RECORDS OF THE VARIOUS UTILITY COMPANIES AND, WHERE POSSIBLE, MEASUREMENTS TAKEN IN THE FIELD. THE INFORMATION IS NOT TO BE RELIED ON AS BEING EXACT OR COMPLETE. THE CONTRACTOR MUST CALL THE LOCAL UTILITY LOCATION CENTER AT LEAST 48 HOURS BEFORE ANY EXCAVATION TO REQUEST EXACT FIELD LOCATIONS OF THE UTILITIES. IT SHALL BE THE RESPONSIBILITY OF THE CONTRACTOR TO RELOCATE ALL EXISTING UTILITIES WHICH CONFLICT WITH THE PROPOSED IMPROVEMENTS SHOWN ON THE PLANS.

THE CONTRACTOR SHALL BE RESPONSIBLE FOR ANY DAMAGE TO EXISTING IMPROVEMENTS AND UTILITIES AND SHALL REPAIR ANY DAMAGE AT HIS EXPENSE.

811 Know what's below. Call before you dig.

LEGEND

- FLOW DIRECTION ARROW
- RECEIVING WATER ARROW
- LIMIT OF CONSTRUCTION (LOC)
- VEHICLE TRACKING CONTROL (VTC)
- CONSTRUCTION FENCE (CF)
- SEDIMENT CONTROL LOG/ ROCK SOCKS (SCL) (RS)
- INLET PROTECTION (IP)

GENERAL NOTES

1. REFER TO SHEET 4.01 FOR GENERAL NOTES.
2. REFER TO SHEET C4.00 FOR OVERALL LEGEND

KEY MAP

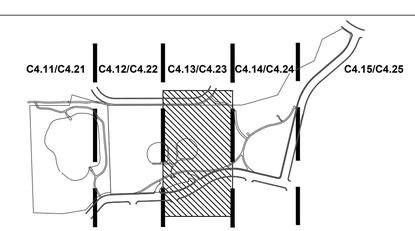

SCALE: 1"=500'
0 250 500 1000
U.S. SURVEY FEET
NORTH

Farnsworth GROUP
5613 DTC PARKWAY, SUITE 1100
GREENWOOD VILLAGE, COLORADO 80111
(303) 692-8838 / info@f-w.com
www.f-w.com
Engineers | Architects | Surveyors | Scientists

ISSUE:

#	DATE:	DESCRIPTION:

PREPARED UNDER THE DIRECT SUPERVISION OF JAY M. NEWELL,PE, COLORADO LICENSE REGISTRATION NO.35219

PRELIMINARY
NOT FOR CONSTRUCTION
THESE DRAWINGS AND/OR SPECIFICATIONS ARE BEING ISSUED FOR INFORMATION ONLY. THEY ARE NOT INTENDED TO BE USED FOR FINAL PRICING OR FOR CONSTRUCTION. THEY ARE PRELIMINARY IN NATURE AND ARE SUBJECT TO CHANGE PRIOR TO ISSUANCE OF THE PROJECT CONSTRUCTION DOCUMENTS. ANY PRICING ATTAINED BY THE CONTRACTOR VIA THE USE OF THESE DOCUMENTS IS CONSIDERED TO BE AT THE RISK OF THE CONTRACTOR.

PROJECT:
CITY OF THORNTON
9500 CIVIC CENTER DRIVE
THORNTON, COLORADO 80229

CHERRY PARK IRRIGATION REHABILITATION, PROJECT 22-46B

11500 BIRCH DR,
THORNTON, CO
80233

DATE:	07/11/2025
DESIGNED:	JASP
DRAWN:	JASP
REVIEWED:	JMN
FIELD BOOK NO.:	-

SHEET TITLE:
EROSION CONTROL (INITIAL)

SHEET NUMBER:
C4.13

PROJECT NO.: 0231420.00

jgreen | J:\2023\0231420.00 - Cherry Park Irrigation Rehabilitation\04_drawings\0WV\C1_Erosion - 0231420.00.dwg | 1/13/2026 7:12 PM |

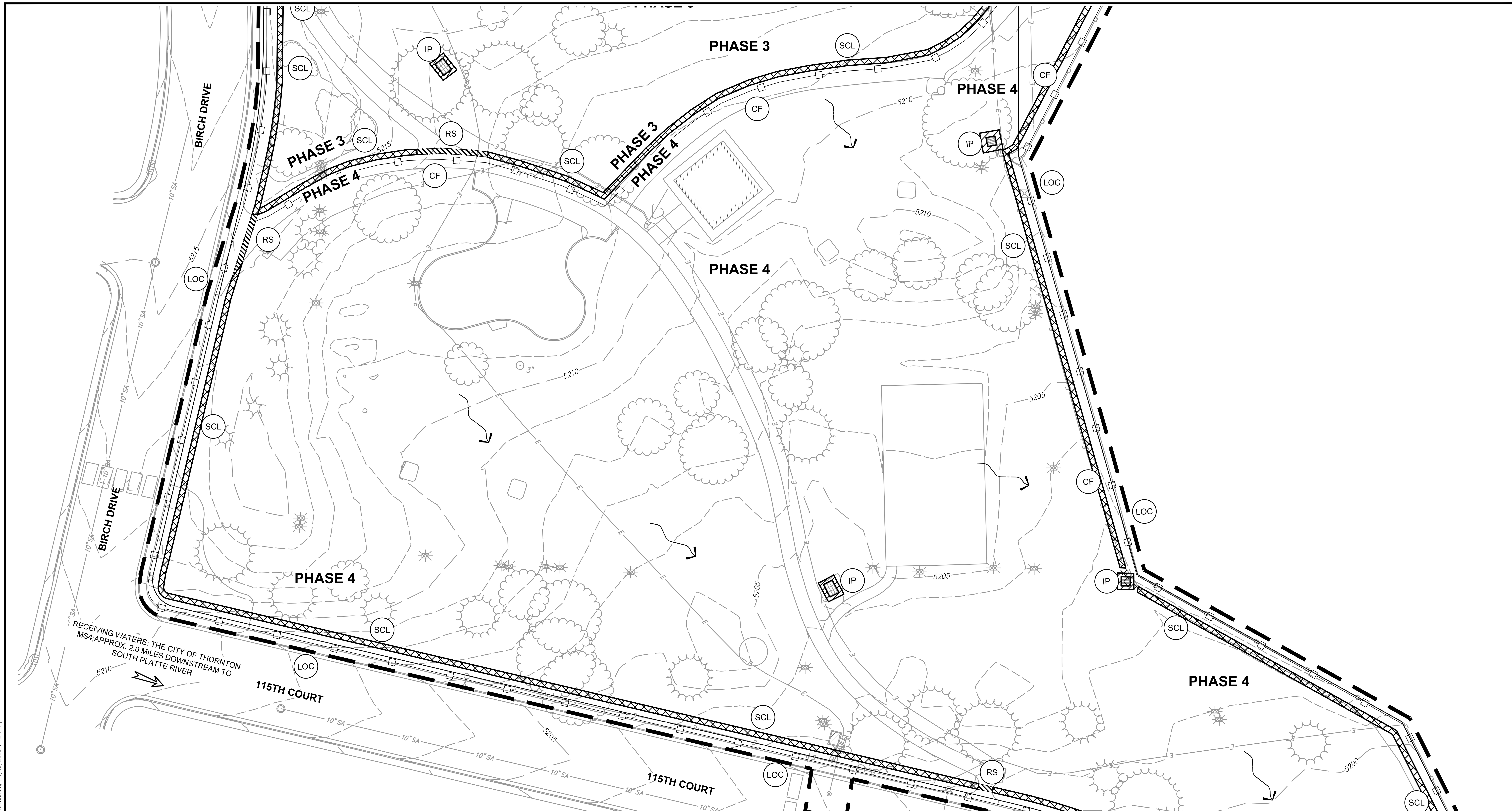

1 PLAN

SCALE: 1"=30'

0 15 30 60
U.S. SURVEY FEET
NORTH

CAUTION - NOTICE TO CONTRACTOR

THE CONTRACTOR IS SPECIFICALLY CAUTIONED THAT THE LOCATION AND/OR ELEVATION OF EXISTING UTILITIES AS SHOWN ON THESE PLANS IS BASED ON RECORDS OF THE VARIOUS UTILITY COMPANIES AND, WHERE POSSIBLE, MEASUREMENTS TAKEN IN THE FIELD. THE INFORMATION IS NOT TO BE RELIED ON AS BEING EXACT OR COMPLETE. THE CONTRACTOR MUST CALL THE LOCAL UTILITY LOCATION CENTER AT LEAST 48 HOURS BEFORE ANY EXCAVATION TO REQUEST EXACT FIELD LOCATIONS OF THE UTILITIES. IT SHALL BE THE RESPONSIBILITY OF THE CONTRACTOR TO RELOCATE ALL EXISTING UTILITIES WHICH CONFLICT WITH THE PROPOSED IMPROVEMENTS SHOWN ON THE PLANS.

THE CONTRACTOR SHALL BE RESPONSIBLE FOR ANY DAMAGE TO EXISTING IMPROVEMENTS AND UTILITIES AND SHALL REPAIR ANY DAMAGE AT HIS EXPENSE.

811 Know what's below. Call before you dig.

LEGEND

- FLOW DIRECTION ARROW
- RECEIVING WATER ARROW
- LIMIT OF CONSTRUCTION (LOC)
- VEHICLE TRACKING CONTROL (VTC)
- CONSTRUCTION FENCE (CF)
- SEDIMENT CONTROL LOG/ ROCK SOCKS (SCL) (RS)
- INLET PROTECTION (IP)

GENERAL NOTES

1. REFER TO SHEET 4.01 FOR GENERAL NOTES.
2. REFER TO SHEET C4.00 FOR OVERALL LEGEND

KEY MAP

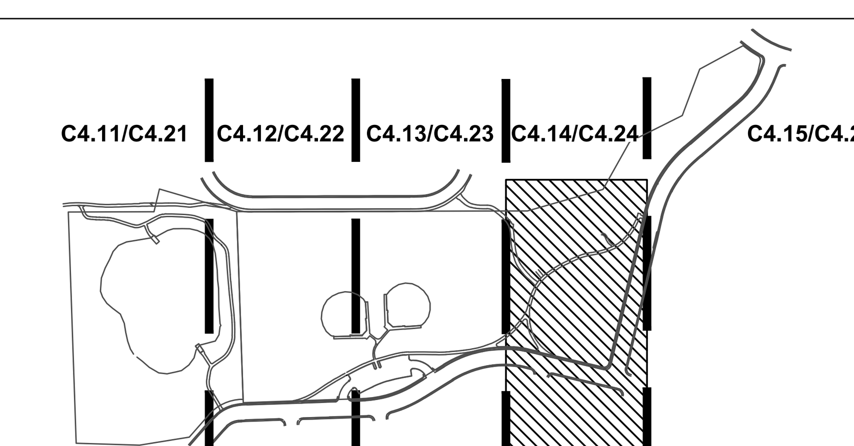

SCALE: 1"=500'

0 250 500 1000
U.S. SURVEY FEET
NORTH

Farnsworth GROUP
5613 DTC PARKWAY, SUITE 1100
GREENWOOD VILLAGE, COLORADO 80111
(303) 692-8838 / info@f-w.com
www.f-w.com
Engineers | Architects | Surveyors | Scientists

ISSUE:

#	DATE:	DESCRIPTION:

PREPARED UNDER THE DIRECT SUPERVISION OF JAY M. NEWELL,PE, COLORADO LICENSE REGISTRATION NO.35219

PRELIMINARY
NOT FOR CONSTRUCTION
THESE DRAWINGS AND/OR SPECIFICATIONS ARE BEING ISSUED FOR INFORMATION ONLY. THEY ARE NOT INTENDED TO BE USED FOR FINAL PRICING OR FOR CONSTRUCTION. THEY ARE PRELIMINARY IN NATURE AND ARE SUBJECT TO CHANGE PRIOR TO ISSUANCE OF THE PROJECT CONSTRUCTION DOCUMENTS. ANY PRICING ATTAINED BY THE CONTRACTOR VIA THE USE OF THESE DOCUMENTS IS CONSIDERED TO BE AT THE RISK OF THE CONTRACTOR.

PROJECT:
CITY OF THORNTON
9500 CIVIC CENTER DRIVE
THORNTON, COLORADO 80229

CHERRY PARK IRRIGATION REHABILITATION, PROJECT 22-46B

11500 BIRCH DR,
THORNTON, CO
80233

DATE:	07/11/2025
DESIGNED:	JASP
DRAWN:	JASP
REVIEWED:	JMN
FIELD BOOK NO.:	-

SHEET TITLE:
EROSION CONTROL (INITIAL)

SHEET NUMBER:
C4.14

PROJECT NO.: 0231420.00

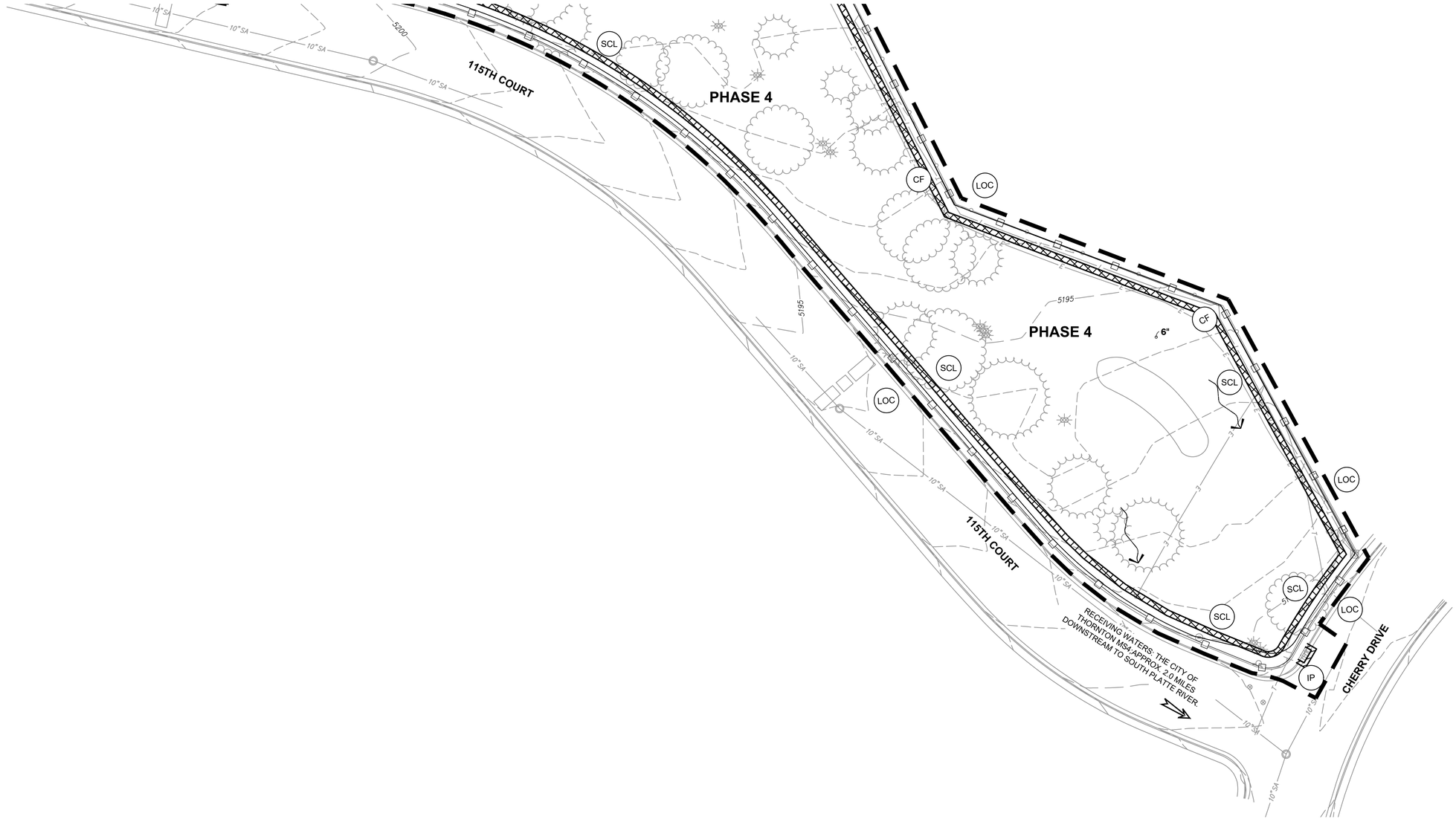

1 PLAN

SCALE: 1"=30'

0 15 30 60 U.S. SURVEY FEET

NORTH

CAUTION - NOTICE TO CONTRACTOR

THE CONTRACTOR IS SPECIFICALLY CAUTIONED THAT THE LOCATION AND/OR ELEVATION OF EXISTING UTILITIES AS SHOWN ON THESE PLANS IS BASED ON RECORDS OF THE VARIOUS UTILITY COMPANIES AND, WHERE POSSIBLE, MEASUREMENTS TAKEN IN THE FIELD. THE INFORMATION IS NOT TO BE RELIED ON AS BEING EXACT OR COMPLETE. THE CONTRACTOR MUST CALL THE LOCAL UTILITY LOCATION CENTER AT LEAST 48 HOURS BEFORE ANY EXCAVATION TO REQUEST EXACT FIELD LOCATIONS OF THE UTILITIES. IT SHALL BE THE RESPONSIBILITY OF THE CONTRACTOR TO RELOCATE ALL EXISTING UTILITIES WHICH CONFLICT WITH THE PROPOSED IMPROVEMENTS SHOWN ON THE PLANS.

THE CONTRACTOR SHALL BE RESPONSIBLE FOR ANY DAMAGE TO EXISTING IMPROVEMENTS AND UTILITIES AND SHALL REPAIR ANY DAMAGE AT HIS EXPENSE.

811 Know what's below. Call before you dig.

LEGEND

- FLOW DIRECTION ARROW
- RECEIVING WATER ARROW
- LIMIT OF CONSTRUCTION (LOC)
- VEHICLE TRACKING CONTROL (VTC)
- CONSTRUCTION FENCE (CF)
- SEDIMENT CONTROL LOG/ ROCK SOCKS (SCL) (RS)
- INLET PROTECTION (IP)

GENERAL NOTES

1. REFER TO SHEET 4.01 FOR GENERAL NOTES.
2. REFER TO SHEET C4.00 FOR OVERALL LEGEND

KEY MAP

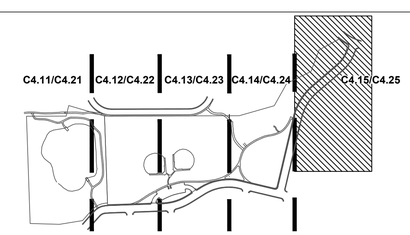

SCALE: 1"=500'

0 250 500 1000 U.S. SURVEY FEET

NORTH

Farnsworth GROUP
5613 DTC PARKWAY, SUITE 1100
GREENWOOD VILLAGE, COLORADO 80111
(303) 692-8838 / info@f-w.com

www.f-w.com
Engineers | Architects | Surveyors | Scientists

ISSUE:

#	DATE:	DESCRIPTION:

PREPARED UNDER THE DIRECT SUPERVISION OF JAY M. NEWELL,PE, COLORADO LICENSE REGISTRATION NO.35219

PRELIMINARY
NOT FOR CONSTRUCTION

THESE DRAWINGS AND/OR SPECIFICATIONS ARE BEING ISSUED FOR INFORMATION ONLY. THEY ARE NOT INTENDED TO BE USED FOR FINAL PRICING OR FOR CONSTRUCTION. THEY ARE PRELIMINARY IN NATURE AND ARE SUBJECT TO CHANGE PRIOR TO ISSUANCE OF THE PROJECT CONSTRUCTION DOCUMENTS. ANY PRICING ATTAINED BY THE CONTRACTOR VIA THE USE OF THESE DOCUMENTS IS CONSIDERED TO BE AT THE RISK OF THE CONTRACTOR.

PROJECT:

CITY OF THORNTON
9500 CIVIC CENTER DRIVE
THORNTON, COLORADO 80229

CHERRY PARK IRRIGATION REHABILITATION, PROJECT 22-46B

11500 BIRCH DR,
THORNTON, CO
80233

DATE:	07/11/2025
DESIGNED:	JASP
DRAWN:	JASP
REVIEWED:	JMN
FIELD BOOK NO.:	-

SHEET TITLE:

EROSION CONTROL (INITIAL)

SHEET NUMBER:

C4.15

PROJECT NO.: 0231420.00

jgreen | J:\2023\0231420.00 - Cherry Park Irrigation Rehabilitation\04_drawings\DWG\C1_Erosion - 0231420.00.dwg | 7/13/2026 7:12 PM |

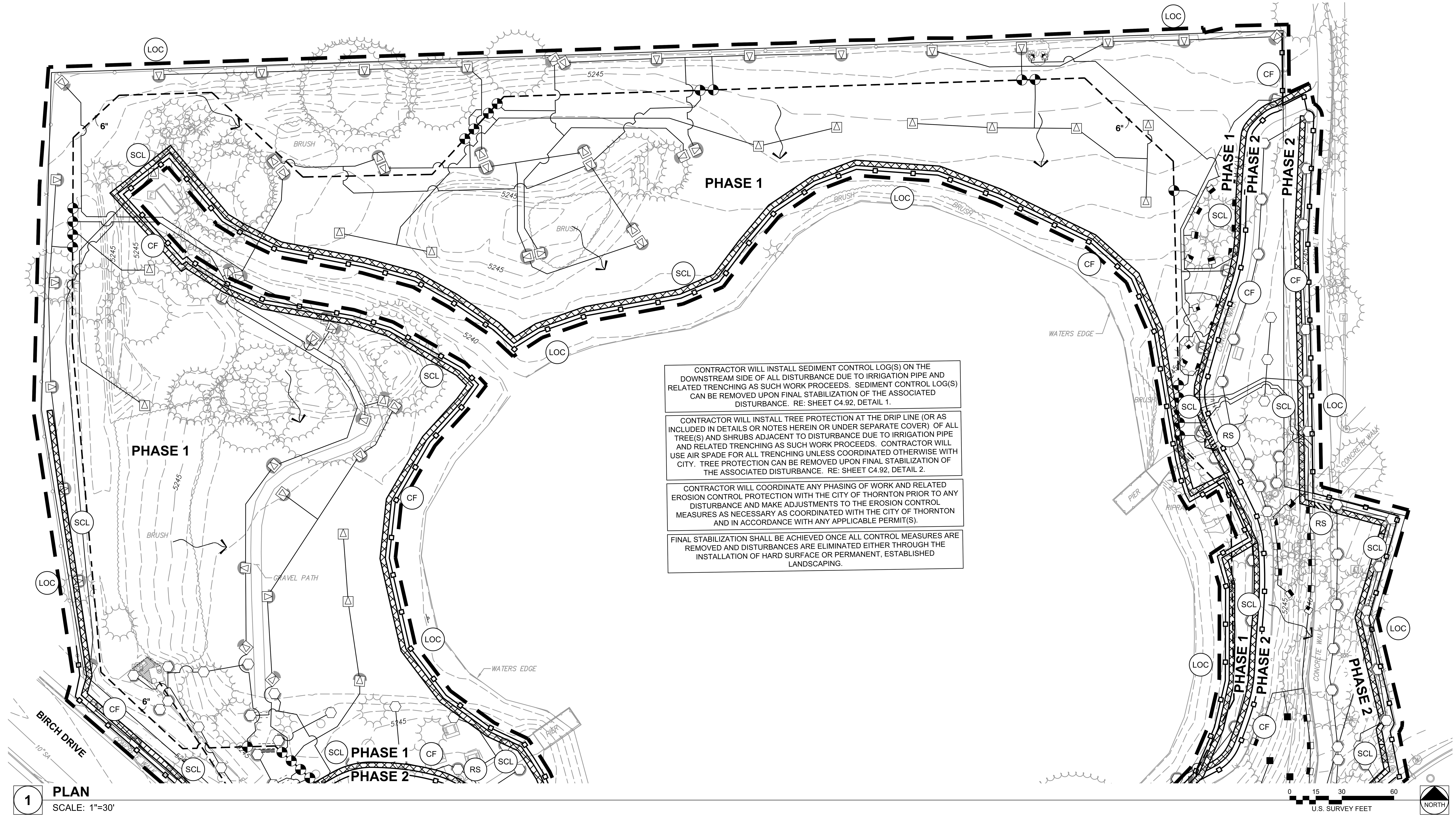

1 **PLAN**
SCALE: 1"=30'

CAUTION - NOTICE TO CONTRACTOR

THE CONTRACTOR IS SPECIFICALLY CAUTIONED THAT THE LOCATION AND/OR ELEVATION OF EXISTING UTILITIES AS SHOWN ON THESE PLANS IS BASED ON RECORDS OF THE VARIOUS UTILITY COMPANIES AND, WHERE POSSIBLE, MEASUREMENTS TAKEN IN THE FIELD. THE INFORMATION IS NOT TO BE RELIED ON AS BEING EXACT OR COMPLETE. THE CONTRACTOR MUST CALL THE LOCAL UTILITY LOCATION CENTER AT LEAST 48 HOURS BEFORE ANY EXCAVATION TO REQUEST EXACT FIELD LOCATIONS OF THE UTILITIES. IT SHALL BE THE RESPONSIBILITY OF THE CONTRACTOR TO RELOCATE ALL EXISTING UTILITIES WHICH CONFLICT WITH THE PROPOSED IMPROVEMENTS SHOWN ON THE PLANS.

THE CONTRACTOR SHALL BE RESPONSIBLE FOR ANY DAMAGE TO EXISTING IMPROVEMENTS AND UTILITIES AND SHALL REPAIR ANY DAMAGE AT HIS EXPENSE.

Know what's **below.**
Call before you dig.

LEGEND

- FLOW DIRECTION ARROW
- RECEIVING WATER ARROW
- LIMIT OF CONSTRUCTION (LOC)
- VEHICLE TRACKING CONTROL (VTC)
- CONSTRUCTION FENCE (CF)
- SEDIMENT CONTROL LOG/ ROCK SOCKS (SCL) (RS)
- INLET PROTECTION (IP)
- STABILIZED STAGING AREA (SSA)
- CONCRETE WASHOUT AREA (CWA)

GENERAL NOTES

1. REFER TO SHEET 4.01 FOR GENERAL NOTES.
2. REFER TO SHEET C4.00 FOR OVERALL LEGEND

KEY MAP

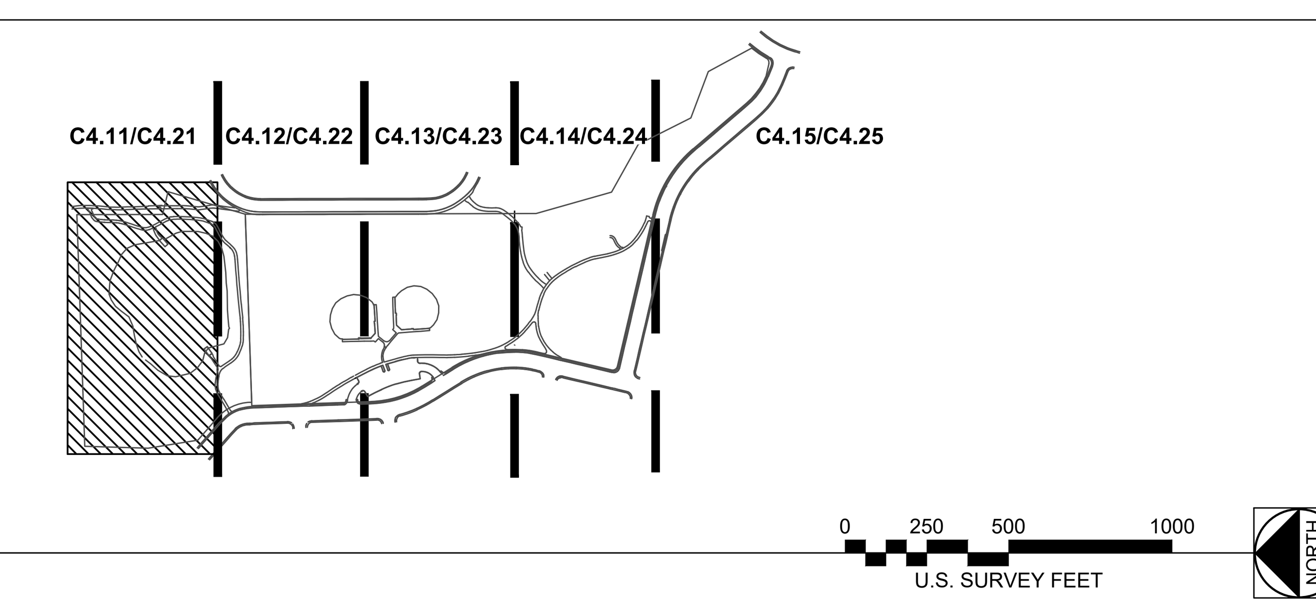

SCALE: 1"=500'

Farnsworth GROUP
5613 DTC PARKWAY, SUITE 1100
GREENWOOD VILLAGE, COLORADO 80111
(303) 692-8838 / info@f-w.com
www.f-w.com
Engineers | Architects | Surveyors | Scientists

ISSUE:

#	DATE:	DESCRIPTION:

PREPARED UNDER THE DIRECT SUPERVISION OF JAY M. NEWELL,PE, COLORADO LICENSE REGISTRATION NO.35219

PRELIMINARY
NOT FOR CONSTRUCTION
THESE DRAWINGS AND/OR SPECIFICATIONS ARE BEING ISSUED FOR INFORMATION ONLY. THEY ARE NOT INTENDED TO BE USED FOR FINAL PRICING OR FOR CONSTRUCTION. THEY ARE PRELIMINARY IN NATURE AND ARE SUBJECT TO CHANGE PRIOR TO ISSUANCE OF THE PROJECT CONSTRUCTION DOCUMENTS. ANY PRICING ATTAINED BY THE CONTRACTOR VIA THE USE OF THESE DOCUMENTS IS CONSIDERED TO BE AT THE RISK OF THE CONTRACTOR.

PROJECT:
CITY OF THORNTON
9500 CIVIC CENTER DRIVE
THORNTON, COLORADO 80229

CHERRY PARK IRRIGATION REHABILITATION, PROJECT 22-46B

11500 BIRCH DR,
THORNTON, CO
80233

DATE:	07/11/2025
DESIGNED:	JASP
DRAWN:	JASP
REVIEWED:	JMN
FIELD BOOK NO.:	-

SHEET TITLE:
EROSION CONTROL (INTERIM)

SHEET NUMBER:
C4.21

PROJECT NO.: 0231420.00

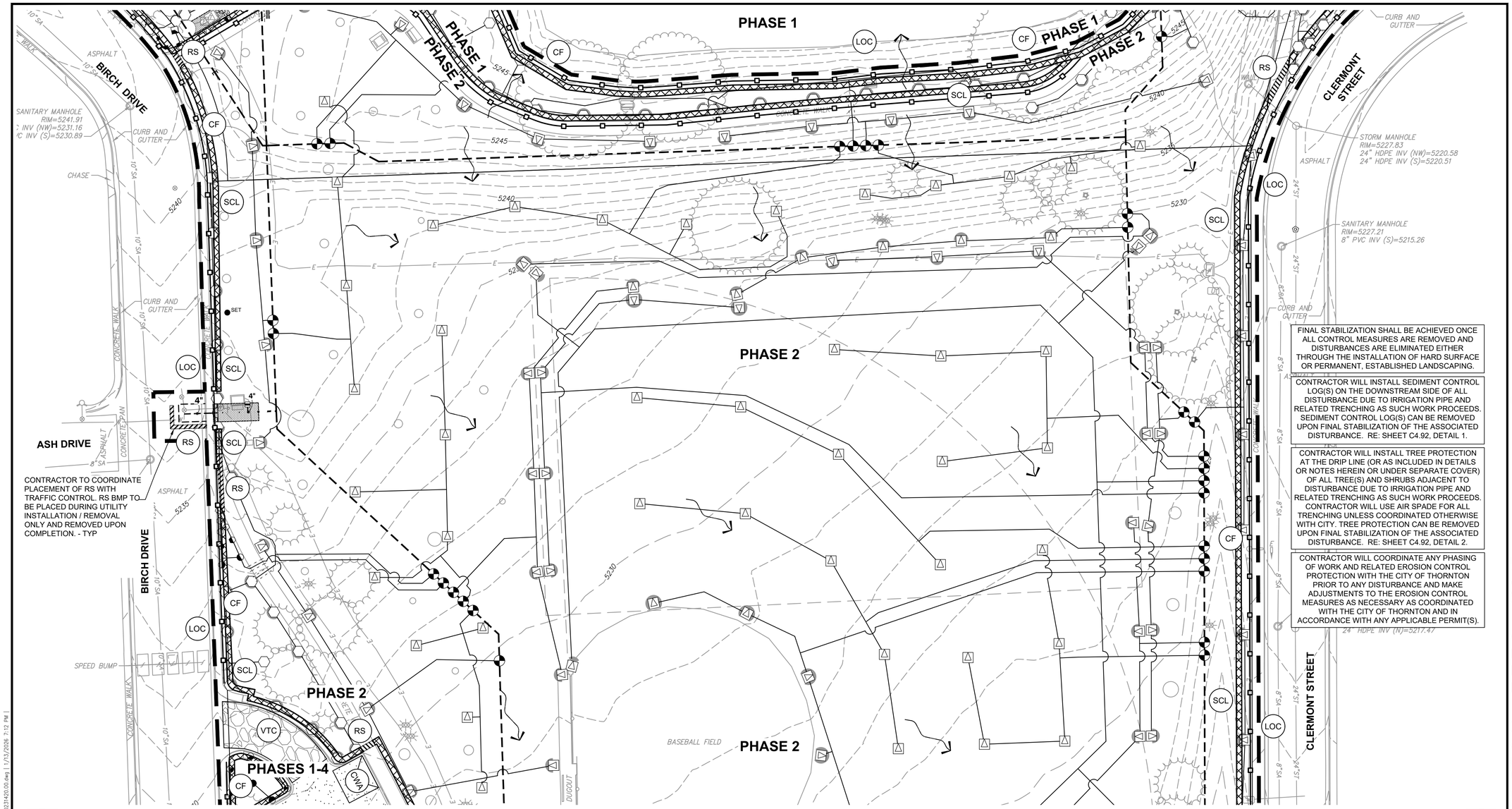

1 **PLAN**
SCALE: 1"=30'

0 15 30 60
U.S. SURVEY FEET
NORTH

FINAL STABILIZATION SHALL BE ACHIEVED ONCE ALL CONTROL MEASURES ARE REMOVED AND DISTURBANCES ARE ELIMINATED EITHER THROUGH THE INSTALLATION OF HARD SURFACE OR PERMANENT, ESTABLISHED LANDSCAPING.

CONTRACTOR WILL INSTALL SEDIMENT CONTROL LOG(S) ON THE DOWNSTREAM SIDE OF ALL DISTURBANCE DUE TO IRRIGATION PIPE AND RELATED TRENCHING AS SUCH WORK PROCEEDS. SEDIMENT CONTROL LOG(S) CAN BE REMOVED UPON FINAL STABILIZATION OF THE ASSOCIATED DISTURBANCE. RE: SHEET C4.92, DETAIL 1.

CONTRACTOR WILL INSTALL TREE PROTECTION AT THE DRIP LINE (OR AS INCLUDED IN DETAILS OR NOTES HEREIN OR UNDER SEPARATE COVER) OF ALL TREE(S) AND SHRUBS ADJACENT TO DISTURBANCE DUE TO IRRIGATION PIPE AND RELATED TRENCHING AS SUCH WORK PROCEEDS. CONTRACTOR WILL USE AIR SPADE FOR ALL TRENCHING UNLESS COORDINATED OTHERWISE WITH CITY. TREE PROTECTION CAN BE REMOVED UPON FINAL STABILIZATION OF THE ASSOCIATED DISTURBANCE. RE: SHEET C4.92, DETAIL 2.

CONTRACTOR WILL COORDINATE ANY PHASING OF WORK AND RELATED EROSION CONTROL PROTECTION WITH THE CITY OF THORNTON PRIOR TO ANY DISTURBANCE AND MAKE ADJUSTMENTS TO THE EROSION CONTROL MEASURES AS NECESSARY AS COORDINATED WITH THE CITY OF THORNTON AND IN ACCORDANCE WITH ANY APPLICABLE PERMIT(S).

CAUTION - NOTICE TO CONTRACTOR

THE CONTRACTOR IS SPECIFICALLY CAUTIONED THAT THE LOCATION AND/OR ELEVATION OF EXISTING UTILITIES AS SHOWN ON THESE PLANS IS BASED ON RECORDS OF THE VARIOUS UTILITY COMPANIES AND, WHERE POSSIBLE, MEASUREMENTS TAKEN IN THE FIELD. THE INFORMATION IS NOT TO BE RELIED ON AS BEING EXACT OR COMPLETE. THE CONTRACTOR MUST CALL THE LOCAL UTILITY LOCATION CENTER AT LEAST 48 HOURS BEFORE ANY EXCAVATION TO REQUEST EXACT FIELD LOCATIONS OF THE UTILITIES. IT SHALL BE THE RESPONSIBILITY OF THE CONTRACTOR TO RELOCATE ALL EXISTING UTILITIES WHICH CONFLICT WITH THE PROPOSED IMPROVEMENTS SHOWN ON THE PLANS.

THE CONTRACTOR SHALL BE RESPONSIBLE FOR ANY DAMAGE TO EXISTING IMPROVEMENTS AND UTILITIES AND SHALL REPAIR ANY DAMAGE AT HIS EXPENSE.

811 Know what's below. Call before you dig.

LEGEND

- FLOW DIRECTION ARROW
- RECEIVING WATER ARROW
- LIMIT OF CONSTRUCTION (LOC)
- VEHICLE TRACKING CONTROL (VTC)
- CONSTRUCTION FENCE (CF)
- SEDIMENT CONTROL LOG/ ROCK SOCKS (SCL) (RS)
- INLET PROTECTION (IP)
- STABILIZED STAGING AREA (SSA)
- CONCRETE WASHOUT AREA (CWA)

GENERAL NOTES

1. REFER TO SHEET 4.01 FOR GENERAL NOTES.
2. REFER TO SHEET C4.00 FOR OVERALL LEGEND

KEY MAP

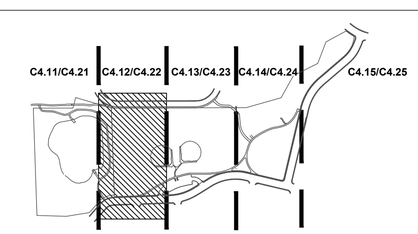

SCALE: 1"=500'
0 250 500 1000
U.S. SURVEY FEET
NORTH

Farnsworth GROUP
5613 DTC PARKWAY, SUITE 1100
GREENWOOD VILLAGE, COLORADO 80111
(303) 692-8838 / info@f-w.com
www.f-w.com
Engineers | Architects | Surveyors | Scientists

ISSUE:

#	DATE:	DESCRIPTION:

PREPARED UNDER THE DIRECT SUPERVISION OF JAY M. NEWELL, PE, COLORADO LICENSE REGISTRATION NO.35219

PRELIMINARY
NOT FOR CONSTRUCTION
THESE DRAWINGS AND/OR SPECIFICATIONS ARE BEING ISSUED FOR INFORMATION ONLY. THEY ARE NOT INTENDED TO BE USED FOR FINAL PRICING OR FOR CONSTRUCTION. THEY ARE PRELIMINARY IN NATURE AND ARE SUBJECT TO CHANGE PRIOR TO ISSUANCE OF THE PROJECT CONSTRUCTION DOCUMENTS. ANY PRICING ATTAINED BY THE CONTRACTOR VIA THE USE OF THESE DOCUMENTS IS CONSIDERED TO BE AT THE RISK OF THE CONTRACTOR.

PROJECT:
CITY OF THORNTON
9500 CIVIC CENTER DRIVE
THORNTON, COLORADO 80229

CHERRY PARK IRRIGATION REHABILITATION, PROJECT 22-46B

11500 BIRCH DR,
THORNTON, CO
80233

DATE:	07/11/2025
DESIGNED:	JASP
DRAWN:	JASP
REVIEWED:	JMN
FIELD BOOK NO.:	-

SHEET TITLE:
EROSION CONTROL (INTERIM)

SHEET NUMBER:
C4.22

PROJECT NO.: 0231420.00

jgreen | J:\2023\0231420.00 - Cherry Park Irrigation Rehabilitation\04_drawings\INR\C1_Erosion - 0231420.00.dwg | 7/11/2026 7:12 PM |

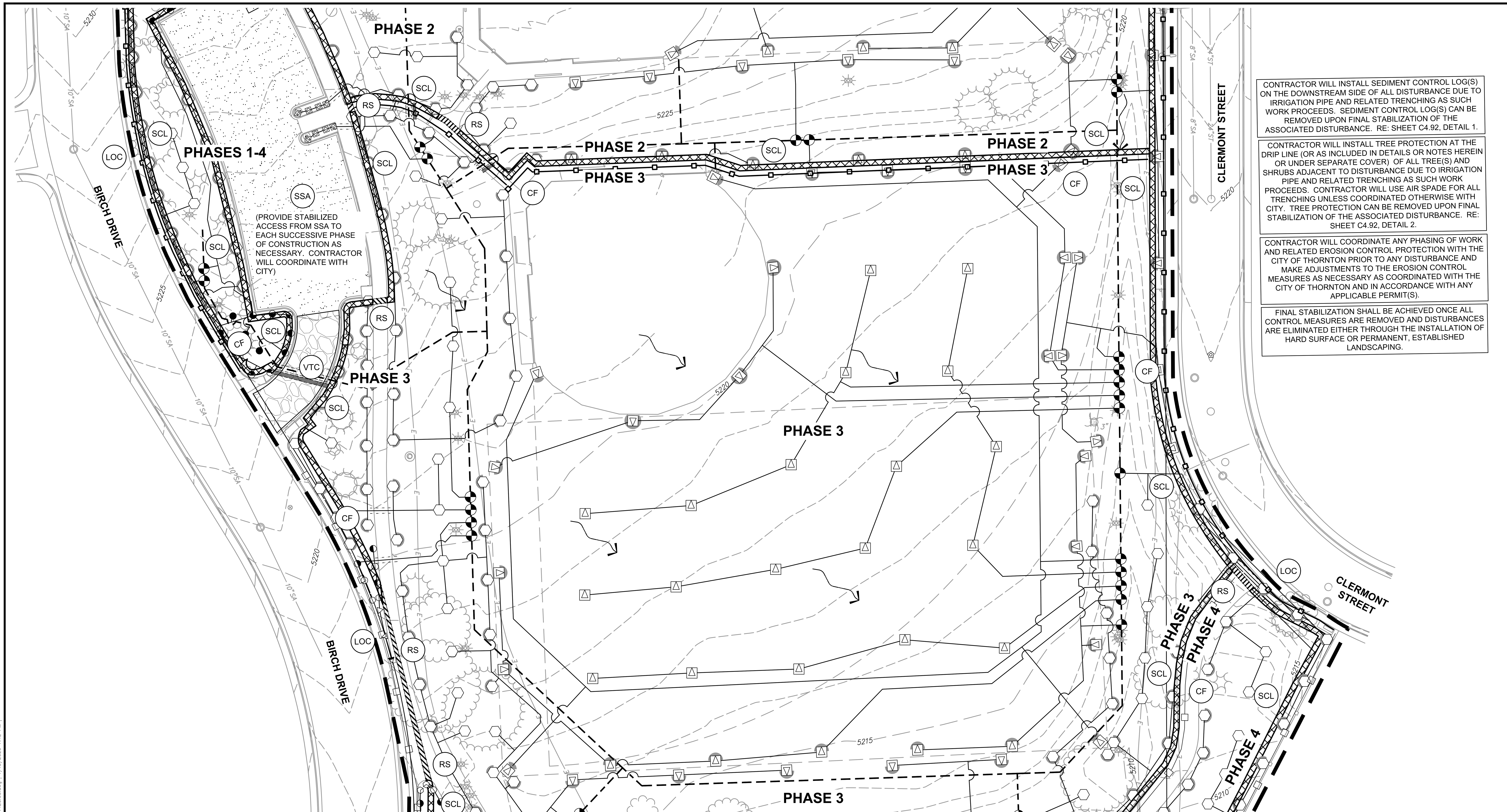

CONTRACTOR WILL INSTALL SEDIMENT CONTROL LOG(S) ON THE DOWNSTREAM SIDE OF ALL DISTURBANCE DUE TO IRRIGATION PIPE AND RELATED TRENCHING AS SUCH WORK PROCEEDS. SEDIMENT CONTROL LOG(S) CAN BE REMOVED UPON FINAL STABILIZATION OF THE ASSOCIATED DISTURBANCE. RE: SHEET C4.92, DETAIL 1.

CONTRACTOR WILL INSTALL TREE PROTECTION AT THE DRIP LINE (OR AS INCLUDED IN DETAILS OR NOTES HEREIN OR UNDER SEPARATE COVER) OF ALL TREE(S) AND SHRUBS ADJACENT TO DISTURBANCE DUE TO IRRIGATION PIPE AND RELATED TRENCHING AS SUCH WORK PROCEEDS. CONTRACTOR WILL USE AIR SPADE FOR ALL TRENCHING UNLESS COORDINATED OTHERWISE WITH CITY. TREE PROTECTION CAN BE REMOVED UPON FINAL STABILIZATION OF THE ASSOCIATED DISTURBANCE. RE: SHEET C4.92, DETAIL 2.

CONTRACTOR WILL COORDINATE ANY PHASING OF WORK AND RELATED EROSION CONTROL PROTECTION WITH THE CITY OF THORNTON PRIOR TO ANY DISTURBANCE AND MAKE ADJUSTMENTS TO THE EROSION CONTROL MEASURES AS NECESSARY AS COORDINATED WITH THE CITY OF THORNTON AND IN ACCORDANCE WITH ANY APPLICABLE PERMIT(S).

FINAL STABILIZATION SHALL BE ACHIEVED ONCE ALL CONTROL MEASURES ARE REMOVED AND DISTURBANCES ARE ELIMINATED EITHER THROUGH THE INSTALLATION OF HARD SURFACE OR PERMANENT, ESTABLISHED LANDSCAPING.

1 PLAN

SCALE: 1"=30'

0 15 30 60 U.S. SURVEY FEET — NORTH

CAUTION - NOTICE TO CONTRACTOR

THE CONTRACTOR IS SPECIFICALLY CAUTIONED THAT THE LOCATION AND/OR ELEVATION OF EXISTING UTILITIES AS SHOWN ON THESE PLANS IS BASED ON RECORDS OF THE VARIOUS UTILITY COMPANIES AND, WHERE POSSIBLE, MEASUREMENTS TAKEN IN THE FIELD. THE INFORMATION IS NOT TO BE RELIED ON AS BEING EXACT OR COMPLETE. THE CONTRACTOR MUST CALL THE LOCAL UTILITY LOCATION CENTER AT LEAST 48 HOURS BEFORE ANY EXCAVATION TO REQUEST EXACT FIELD LOCATIONS OF THE UTILITIES. IT SHALL BE THE RESPONSIBILITY OF THE CONTRACTOR TO RELOCATE ALL EXISTING UTILITIES WHICH CONFLICT WITH THE PROPOSED IMPROVEMENTS SHOWN ON THE PLANS.

THE CONTRACTOR SHALL BE RESPONSIBLE FOR ANY DAMAGE TO EXISTING IMPROVEMENTS AND UTILITIES AND SHALL REPAIR ANY DAMAGE AT HIS EXPENSE.

811 Know what's below. Call before you dig.

LEGEND

- FLOW DIRECTION ARROW
- RECEIVING WATER ARROW
- LIMIT OF CONSTRUCTION (LOC)
- VEHICLE TRACKING CONTROL (VTC)
- CONSTRUCTION FENCE (CF)
- SEDIMENT CONTROL LOG/ ROCK SOCKS (SCL) (RS)
- INLET PROTECTION (IP)
- STABILIZED STAGING AREA (SSA)
- CONCRETE WASHOUT AREA (CWA)

GENERAL NOTES

1. REFER TO SHEET 4.01 FOR GENERAL NOTES.
2. REFER TO SHEET C4.00 FOR OVERALL LEGEND

KEY MAP

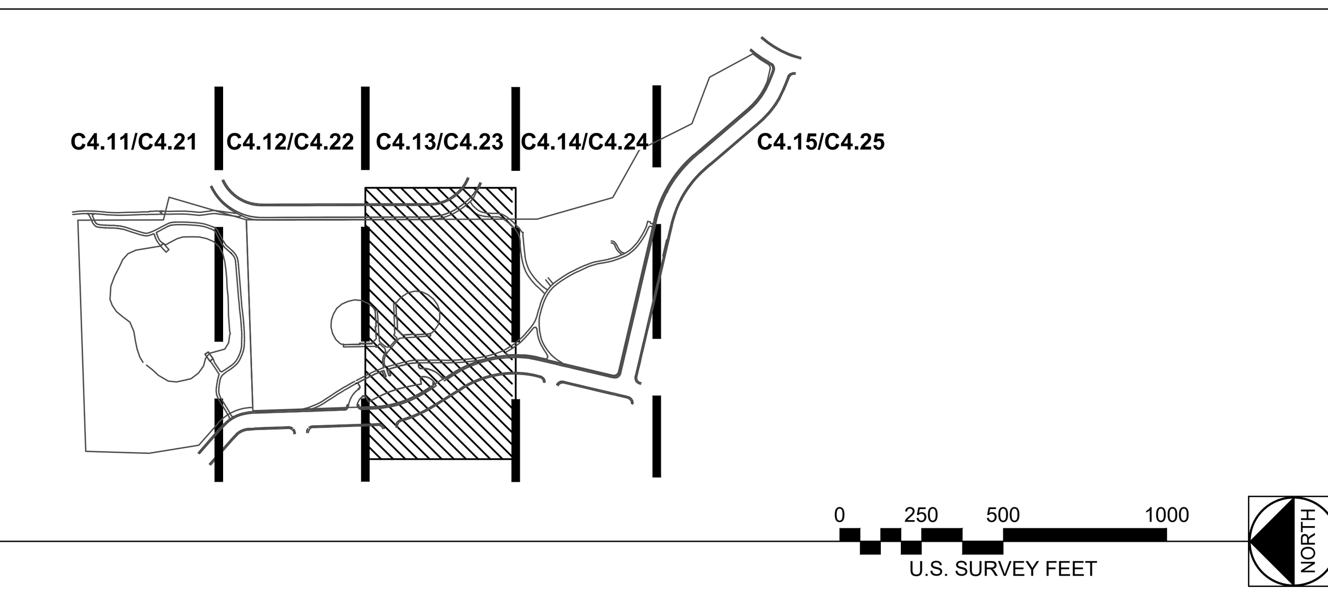

SCALE: 1"=500'

Farnsworth GROUP
5613 DTC PARKWAY, SUITE 1100
GREENWOOD VILLAGE, COLORADO 80111
(303) 692-8838 / info@f-w.com
www.f-w.com
Engineers | Architects | Surveyors | Scientists

ISSUE:

#	DATE:	DESCRIPTION:

PREPARED UNDER THE DIRECT SUPERVISION OF JAY M. NEWELL,PE, COLORADO LICENSE REGISTRATION NO.35219

PRELIMINARY
NOT FOR CONSTRUCTION
THESE DRAWINGS AND/OR SPECIFICATIONS ARE BEING ISSUED FOR INFORMATION ONLY. THEY ARE NOT INTENDED TO BE USED FOR FINAL PRICING OR FOR CONSTRUCTION. THEY ARE PRELIMINARY IN NATURE AND ARE SUBJECT TO CHANGE PRIOR TO ISSUANCE OF THE PROJECT CONSTRUCTION DOCUMENTS. ANY PRICING ATTAINED BY THE CONTRACTOR VIA THE USE OF THESE DOCUMENTS IS CONSIDERED TO BE AT THE RISK OF THE CONTRACTOR.

PROJECT:
CITY OF THORNTON
9500 CIVIC CENTER DRIVE
THORNTON, COLORADO 80229

CHERRY PARK IRRIGATION REHABILITATION, PROJECT 22-46B

11500 BIRCH DR,
THORNTON, CO
80233

DATE:	07/11/2025
DESIGNED:	JASP
DRAWN:	JASP
REVIEWED:	JMN
FIELD BOOK NO.:	-

SHEET TITLE:
EROSION CONTROL (INTERIM)

SHEET NUMBER:
C4.23

PROJECT NO.: 0231420.00

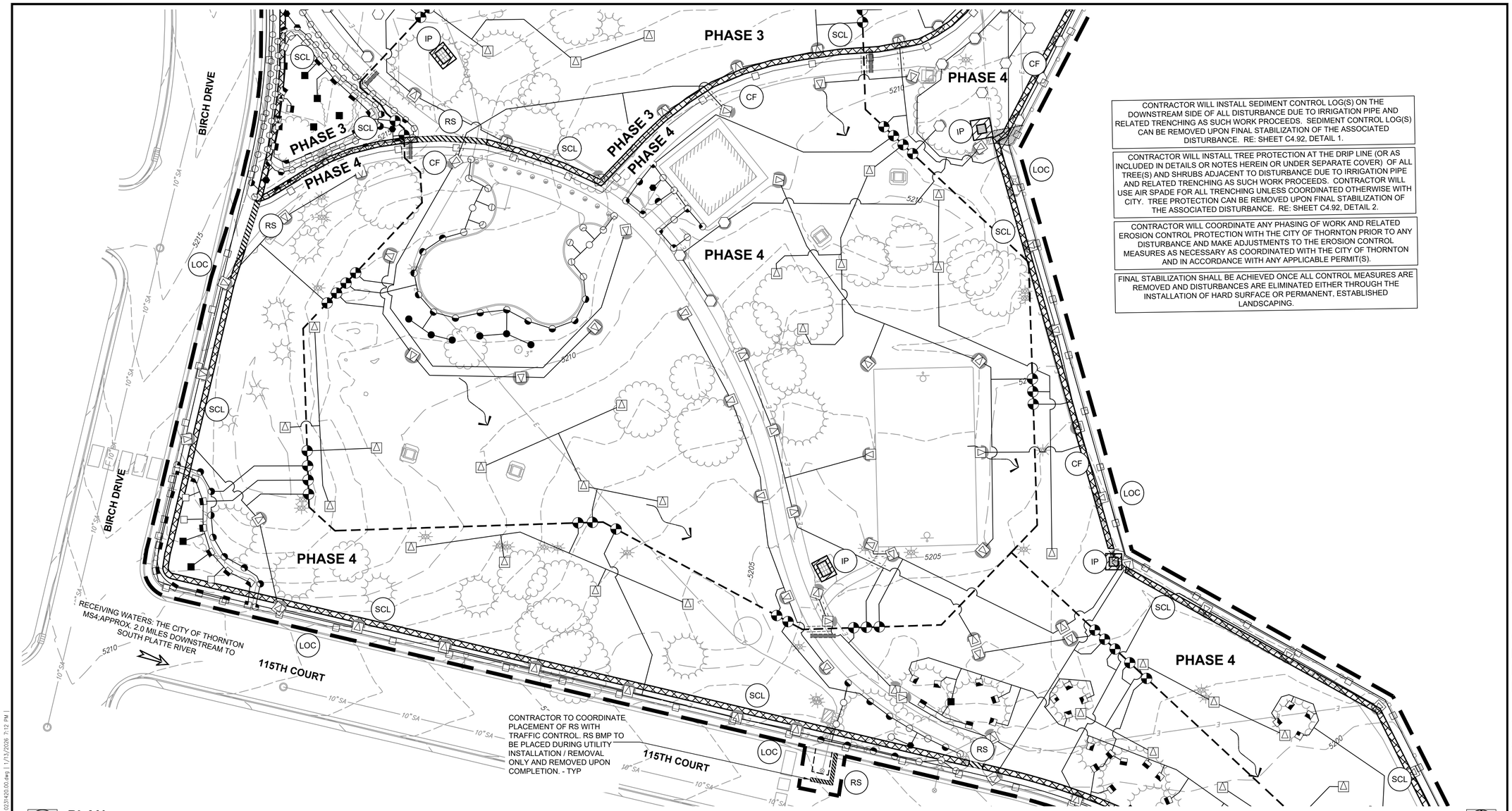

CONTRACTOR WILL INSTALL SEDIMENT CONTROL LOG(S) ON THE DOWNSTREAM SIDE OF ALL DISTURBANCE DUE TO IRRIGATION PIPE AND RELATED TRENCHING AS SUCH WORK PROCEEDS. SEDIMENT CONTROL LOG(S) CAN BE REMOVED UPON FINAL STABILIZATION OF THE ASSOCIATED DISTURBANCE. RE: SHEET C4.92, DETAIL 1.

CONTRACTOR WILL INSTALL TREE PROTECTION AT THE DRIP LINE (OR AS INCLUDED IN DETAILS OR NOTES HEREIN OR UNDER SEPARATE COVER) OF ALL TREE(S) AND SHRUBS ADJACENT TO DISTURBANCE DUE TO IRRIGATION PIPE AND RELATED TRENCHING AS SUCH WORK PROCEEDS. CONTRACTOR WILL USE AIR SPADE FOR ALL TRENCHING UNLESS COORDINATED OTHERWISE WITH CITY. TREE PROTECTION CAN BE REMOVED UPON FINAL STABILIZATION OF THE ASSOCIATED DISTURBANCE. RE: SHEET C4.92, DETAIL 2.

CONTRACTOR WILL COORDINATE ANY PHASING OF WORK AND RELATED EROSION CONTROL PROTECTION WITH THE CITY OF THORNTON PRIOR TO ANY DISTURBANCE AND MAKE ADJUSTMENTS TO THE EROSION CONTROL MEASURES AS NECESSARY AS COORDINATED WITH THE CITY OF THORNTON AND IN ACCORDANCE WITH ANY APPLICABLE PERMIT(S).

FINAL STABILIZATION SHALL BE ACHIEVED ONCE ALL CONTROL MEASURES ARE REMOVED AND DISTURBANCES ARE ELIMINATED EITHER THROUGH THE INSTALLATION OF HARD SURFACE OR PERMANENT, ESTABLISHED LANDSCAPING.

1 **PLAN**
SCALE: 1"=30'

0 15 30 60
U.S. SURVEY FEET
NORTH

CAUTION - NOTICE TO CONTRACTOR

THE CONTRACTOR IS SPECIFICALLY CAUTIONED THAT THE LOCATION AND/OR ELEVATION OF EXISTING UTILITIES AS SHOWN ON THESE PLANS IS BASED ON RECORDS OF THE VARIOUS UTILITY COMPANIES AND, WHERE POSSIBLE, MEASUREMENTS TAKEN IN THE FIELD. THE INFORMATION IS NOT TO BE RELIED ON AS BEING EXACT OR COMPLETE. THE CONTRACTOR MUST CALL THE LOCAL UTILITY LOCATION CENTER AT LEAST 48 HOURS BEFORE ANY EXCAVATION TO REQUEST EXACT FIELD LOCATIONS OF THE UTILITIES. IT SHALL BE THE RESPONSIBILITY OF THE CONTRACTOR TO RELOCATE ALL EXISTING UTILITIES WHICH CONFLICT WITH THE PROPOSED IMPROVEMENTS SHOWN ON THE PLANS.

THE CONTRACTOR SHALL BE RESPONSIBLE FOR ANY DAMAGE TO EXISTING IMPROVEMENTS AND UTILITIES AND SHALL REPAIR ANY DAMAGE AT HIS EXPENSE.

811 Know what's below. Call before you dig.

LEGEND

- FLOW DIRECTION ARROW
- RECEIVING WATER ARROW
- LIMIT OF CONSTRUCTION (LOC)
- VEHICLE TRACKING CONTROL (VTC)
- CONSTRUCTION FENCE (CF)
- SEDIMENT CONTROL LOG/ ROCK SOCKS (SCL) (RS)
- INLET PROTECTION (IP)
- STABILIZED STAGING AREA (SSA)
- CONCRETE WASHOUT AREA (CWA)

GENERAL NOTES

1. REFER TO SHEET 4.01 FOR GENERAL NOTES.
2. REFER TO SHEET C4.00 FOR OVERALL LEGEND

KEY MAP

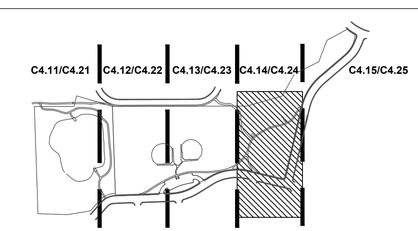

SCALE: 1"=500'
0 250 500 1000
U.S. SURVEY FEET
NORTH

Farnsworth GROUP
5613 DTC PARKWAY, SUITE 1100
GREENWOOD VILLAGE, COLORADO 80111
(303) 692-8838 / info@f-w.com
www.f-w.com
Engineers | Architects | Surveyors | Scientists

ISSUE:

#	DATE:	DESCRIPTION:

PREPARED UNDER THE DIRECT SUPERVISION OF JAY M. NEWELL,PE, COLORADO LICENSE REGISTRATION NO.35219

PRELIMINARY
NOT FOR CONSTRUCTION
THESE DRAWINGS AND/OR SPECIFICATIONS ARE BEING ISSUED FOR INFORMATION ONLY. THEY ARE NOT INTENDED TO BE USED FOR FINAL PRICING OR FOR CONSTRUCTION. THEY ARE PRELIMINARY IN NATURE AND ARE SUBJECT TO CHANGE PRIOR TO ISSUANCE OF THE PROJECT CONSTRUCTION DOCUMENTS. ANY PRICING ATTAINED BY THE CONTRACTOR VIA THE USE OF THESE DOCUMENTS IS CONSIDERED TO BE AT THE RISK OF THE CONTRACTOR.

PROJECT:
CITY OF THORNTON
9500 CIVIC CENTER DRIVE
THORNTON, COLORADO 80229

CHERRY PARK IRRIGATION REHABILITATION, PROJECT 22-46B

11500 BIRCH DR,
THORNTON, CO
80233

DATE:	07/11/2025
DESIGNED:	JASP
DRAWN:	JASP
REVIEWED:	JMN
FIELD BOOK NO.:	-

SHEET TITLE:
EROSION CONTROL (INTERIM)

SHEET NUMBER:
C4.24

PROJECT NO.: 0231420.00

jgreen | J:\2023\0231420.00 - Cherry Park Irrigation Rehabilitation\04_drawings\GWC\C1_Erosion - 0231420.00.dwg | 1/13/2026 7:12 PM |

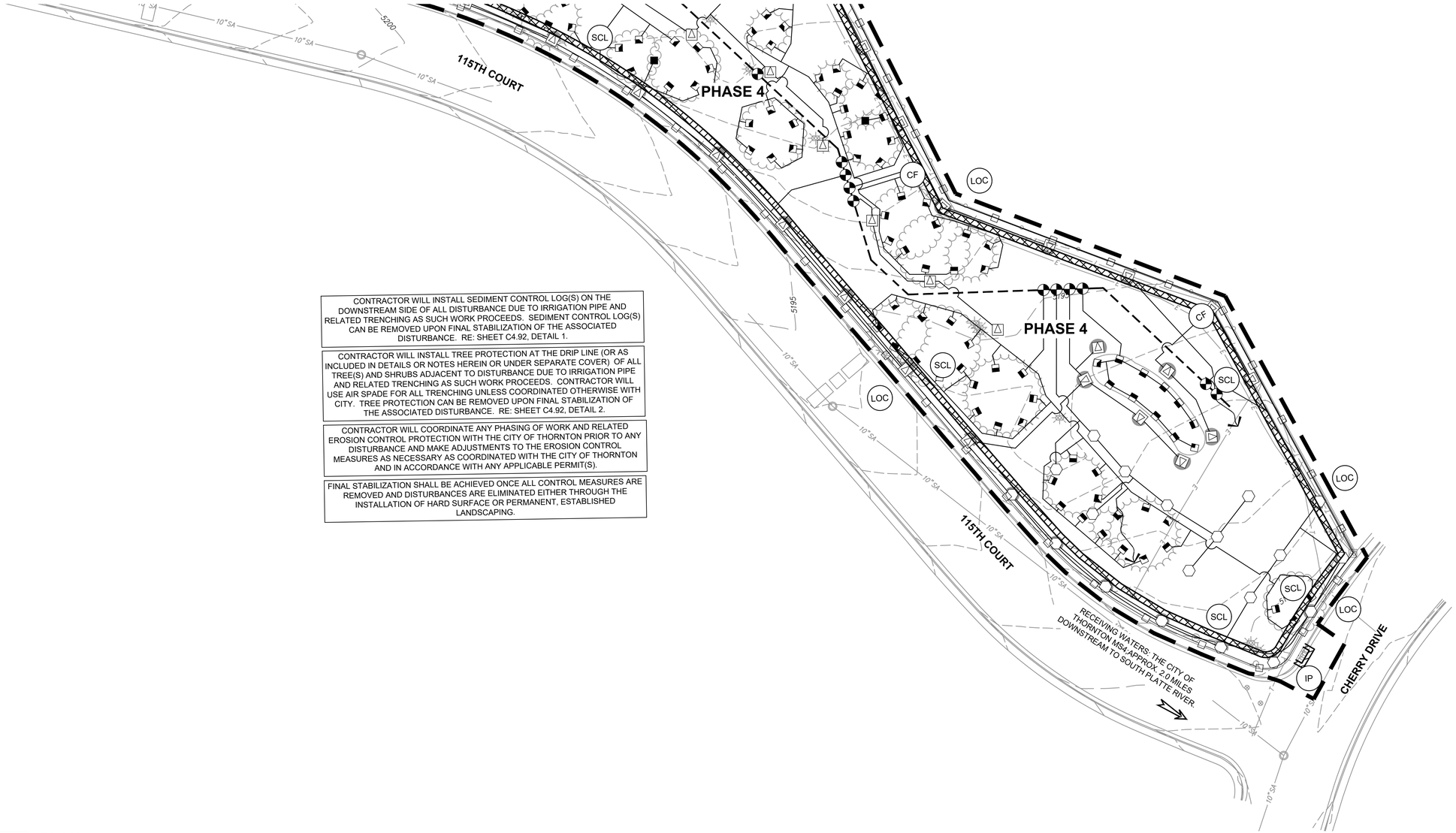

CONTRACTOR WILL INSTALL SEDIMENT CONTROL LOG(S) ON THE DOWNSTREAM SIDE OF ALL DISTURBANCE DUE TO IRRIGATION PIPE AND RELATED TRENCHING AS SUCH WORK PROCEEDS. SEDIMENT CONTROL LOG(S) CAN BE REMOVED UPON FINAL STABILIZATION OF THE ASSOCIATED DISTURBANCE. RE: SHEET C4.92, DETAIL 1.

CONTRACTOR WILL INSTALL TREE PROTECTION AT THE DRIP LINE (OR AS INCLUDED IN DETAILS OR NOTES HEREIN OR UNDER SEPARATE COVER) OF ALL TREE(S) AND SHRUBS ADJACENT TO DISTURBANCE DUE TO IRRIGATION PIPE AND RELATED TRENCHING AS SUCH WORK PROCEEDS. CONTRACTOR WILL USE AIR SPADE FOR ALL TRENCHING UNLESS COORDINATED OTHERWISE WITH CITY. TREE PROTECTION CAN BE REMOVED UPON FINAL STABILIZATION OF THE ASSOCIATED DISTURBANCE. RE: SHEET C4.92, DETAIL 2.

CONTRACTOR WILL COORDINATE ANY PHASING OF WORK AND RELATED EROSION CONTROL PROTECTION WITH THE CITY OF THORNTON PRIOR TO ANY DISTURBANCE AND MAKE ADJUSTMENTS TO THE EROSION CONTROL MEASURES AS NECESSARY AS COORDINATED WITH THE CITY OF THORNTON AND IN ACCORDANCE WITH ANY APPLICABLE PERMIT(S).

FINAL STABILIZATION SHALL BE ACHIEVED ONCE ALL CONTROL MEASURES ARE REMOVED AND DISTURBANCES ARE ELIMINATED EITHER THROUGH THE INSTALLATION OF HARD SURFACE OR PERMANENT, ESTABLISHED LANDSCAPING.

1 PLAN

SCALE: 1"=30'

0 15 30 60 U.S. SURVEY FEET NORTH

CAUTION - NOTICE TO CONTRACTOR

THE CONTRACTOR IS SPECIFICALLY CAUTIONED THAT THE LOCATION AND/OR ELEVATION OF EXISTING UTILITIES AS SHOWN ON THESE PLANS IS BASED ON RECORDS OF THE VARIOUS UTILITY COMPANIES AND, WHERE POSSIBLE, MEASUREMENTS TAKEN IN THE FIELD. THE INFORMATION IS NOT TO BE RELIED ON AS BEING EXACT OR COMPLETE. THE CONTRACTOR MUST CALL THE LOCAL UTILITY LOCATION CENTER AT LEAST 48 HOURS BEFORE ANY EXCAVATION TO REQUEST EXACT FIELD LOCATIONS OF THE UTILITIES. IT SHALL BE THE RESPONSIBILITY OF THE CONTRACTOR TO RELOCATE ALL EXISTING UTILITIES WHICH CONFLICT WITH THE PROPOSED IMPROVEMENTS SHOWN ON THE PLANS.

THE CONTRACTOR SHALL BE RESPONSIBLE FOR ANY DAMAGE TO EXISTING IMPROVEMENTS AND UTILITIES AND SHALL REPAIR ANY DAMAGE AT HIS EXPENSE.

811 Know what's below. Call before you dig.

LEGEND

- FLOW DIRECTION ARROW
- RECEIVING WATER ARROW
- LIMIT OF CONSTRUCTION (LOC)
- VEHICLE TRACKING CONTROL (VTC)
- CONSTRUCTION FENCE (CF)
- SEDIMENT CONTROL LOG/ ROCK SOCKS (SCL) (RS)
- INLET PROTECTION (IP)
- STABILIZED STAGING AREA (SSA)
- CONCRETE WASHOUT AREA (CWA)

GENERAL NOTES

1. REFER TO SHEET 4.01 FOR GENERAL NOTES.
2. REFER TO SHEET C4.00 FOR OVERALL LEGEND

KEY MAP

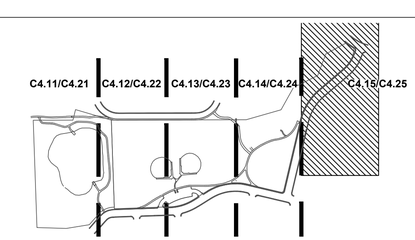

SCALE: 1"=500'

0 250 500 1000 U.S. SURVEY FEET NORTH

Farnsworth GROUP
5613 DTC PARKWAY, SUITE 1100
GREENWOOD VILLAGE, COLORADO 80111
(303) 692-8838 / info@f-w.com
www.f-w.com
Engineers | Architects | Surveyors | Scientists

ISSUE:

#	DATE:	DESCRIPTION:

PREPARED UNDER THE DIRECT SUPERVISION OF JAY M. NEWELL,PE, COLORADO LICENSE REGISTRATION NO.35219

PRELIMINARY
NOT FOR CONSTRUCTION

THESE DRAWINGS AND/OR SPECIFICATIONS ARE BEING ISSUED FOR INFORMATION ONLY. THEY ARE NOT INTENDED TO BE USED FOR FINAL PRICING OR FOR CONSTRUCTION. THEY ARE PRELIMINARY IN NATURE AND ARE SUBJECT TO CHANGE PRIOR TO ISSUANCE OF THE PROJECT CONSTRUCTION DOCUMENTS. ANY PRICING ATTAINED BY THE CONTRACTOR VIA THE USE OF THESE DOCUMENTS IS CONSIDERED TO BE AT THE RISK OF THE CONTRACTOR.

PROJECT:

CITY OF THORNTON
9500 CIVIC CENTER DRIVE
THORNTON, COLORADO 80229

CHERRY PARK IRRIGATION REHABILITATION, PROJECT 22-46B

11500 BIRCH DR,
THORNTON, CO
80233

DATE:	07/11/2025
DESIGNED:	JASP
DRAWN:	JASP
REVIEWED:	JMN
FIELD BOOK NO.:	-

SHEET TITLE:

EROSION CONTROL (INTERIM)

SHEET NUMBER:

C4.25

PROJECT NO.: 0231420.00

jgreen | J:\2023\0231420.00 - Cherry Park Irrigation Rehabilitation\04_drawings\UWV\C1_Erosion - 0231420.00.dwg | 1/13/2026 7:12 PM |

INLET PROTECTION

IP

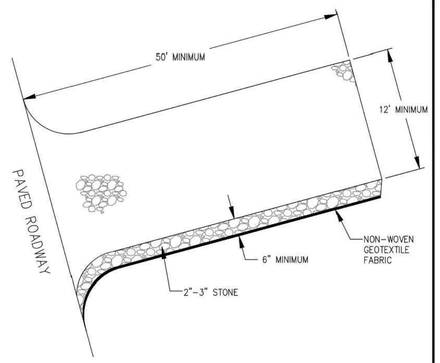

NOTES:
1. PAVED ROADWAY TO BE KEPT CLEAN OF MUD, DIRT, ROCKS, AND DEBRIS AT ALL TIMES.
2. GEOTEXTILE FABRIC SHALL COMPLY WITH CDOT 712.08b.
3. 2"-3" STONE SHALL CONTAIN LESS THAN 10% FINES.
4. CONSTRUCTION EXIT SHALL BE MAINTAINED AT ALL TIMES. STONE SHOULD BE BLADED AND/OR ADDITIONAL 2"-3" STONE SHOULD BE PLACED IF VOIDS BEGIN FILLING WITH DEBRIS.
5. IF A DRAINAGE DITCH EXISTS NEXT TO ROADWAY, INSTALL TEMPORARY CULVERT UNDERNEATH STONE CONSTRUCTION EXIT TO CONVEY FLOW.
6. PROVIDE INLET PROTECTION FOR ANY INLETS LOCATED IMMEDIATELY ADJACENT TO THE CONSTRUCTION EXIT.
7. IF TRACKOUT DOES OCCUR, ROADWAY SHOULD BE SWEPT IMMEDIATELY.
8. RECYCLED CONCRETE OR RECYCLED ASPHALT SHALL NOT BE USED.

N.T.S.

	CITY OF THORNTON, COLORADO STANDARDS & SPECIFICATIONS	ISSUED: NOV 08 REVISED:
	VEHICLE TRACKING PAD	DRAWING NO. 400-7

SEDMENT CONTROL LOGS

SCL

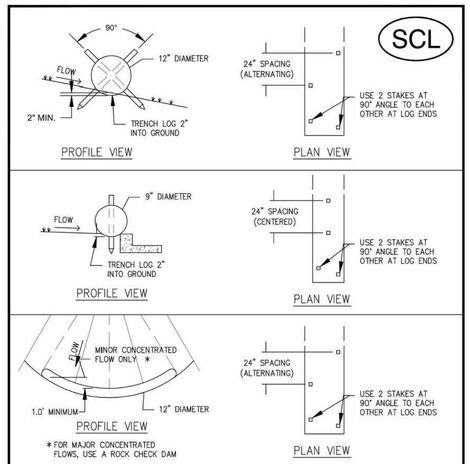

* FOR MAJOR CONCENTRATED FLOWS, USE A ROCK CHECK DAM

NOTES:
1. STAKES SHALL BE 1-1/2" x 1-1/2" x 24" MINIMUM AND EMBEDDED INTO GROUND A MINIMUM OF 12".
2. SEDIMENT CONTROL LOG SHALL BE TRENCHED 2" INTO GROUND.
3. FOR CONTINUOUS CONTROL, ADJACENT SEDIMENT CONTROL LOGS SHALL BE PLACED FIRMLY TOGETHER WITH NO GAPS.
4. SEDIMENT SHALL BE CLEANED/ REMOVED WHEN SEDIMENT DEPTH IS 1/2 THE HEIGHT OF THE SEDIMENT CONTROL LOG.

N.T.S.

	CITY OF THORNTON, COLORADO STANDARDS & SPECIFICATIONS	ISSUED: NOV 08 REVISED:
	SEDIMENT CONTROL LOG	DRAWING NO. 400-9

INLET PROTECTION

IP

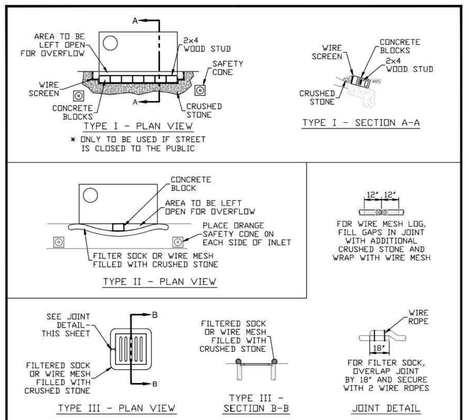

NOTES:
1. CRUSHED STONE SHALL BE NO. 4 STONE WITH 0% PASSING THE 3/4" SIEVE.
2. SEDIMENT SHALL BE REMOVED WHEN SEDIMENT ACCUMULATION REACHES 1/2 THE INLET PROTECTION HEIGHT.
3. INLET PROTECTION SHALL BE PLACED IN A MANNER NOT TO CAUSE SIGNIFICANT FLOODING IN PUBLIC STREETS OR AREAS.
4. INSET FILTER BAGS WITH OVERFLOW PORTS MAY BE USED IN HIGH TRAFFIC AREAS AS A SUBSTITUTE.
5. IF LARGE DEPOSITS OF SEDIMENT ENTERS THE STORM SEWER, THE CONTRACTOR SHALL CLEAN THE STORM SEWER TO THE SATISFACTION OF THE CITY.

N.T.S.

	CITY OF THORNTON, COLORADO STANDARDS & SPECIFICATIONS	ISSUED: NOV 08 REVISED:
	INLET PROTECTION	DRAWING NO. 400-10

CONCRETE WASHOUT AREA

CWA

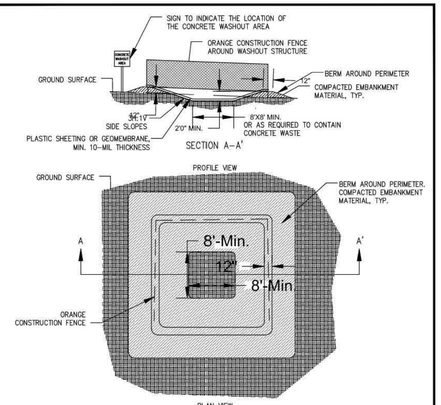

NOTES:
1. CONCRETE WASHOUT AREA SHALL BE INSTALLED PRIOR TO ANY CONCRETE PLACEMENT ON SITE; PLACED A MINIMUM 50' FROM STATE WATERS.
2. VEHICLE TRACKING CONTROL IS REQUIRED AT CONCRETE WASHOUT ENTRANCE IF ACCESS TO CONCRETE WASHOUT AREA IS OFF PAVEMENT.
3. A PLASTIC SHEETING OR GEOMEMBRANE LINER SHALL BE PLACED. MINIMUM 10-MIL THICKNESS..
4. THE CONCRETE WASHOUT AREA SHALL BE REPAIRED AND/OR ENLARGED AS NECESSARY TO MAINTAIN CAPACITY FOR WASTE CONCRETE.
5. WASTE MATERIAL FROM CONCRETE WASHOUT OPERATIONS MUST BE REMOVED AND LEGALLY DISPOSED OF WHEN IT HAS ACCUMULATED TWO-THIRDS OF THE WET STORAGE CAPACITY OF THE STRUCTURE AND AT THE END OF CONSTRUCTION.
6. WHEN THE CONCRETE WASHOUT AREA IS REMOVED, THE DISTURBED AREA SHALL BE SEEDED AND MULCHED OR OTHERWISE STABILIZED IN A MANNER ACCEPTED BY THE CITY.
7. NO STORMWATER RUN-OFF SHALL DRAIN INTO CONCRETE WASHOUT AREA.

N. NST.S.

	CITY OF THORNTON, COLORADO STANDARDS & SPECIFICATIONS	ISSUED: MARCH 2005 REVISED: NOV 08
	CONCRETE WASHOUT AREA DETAIL	DRAWING NO. 400-6

CONSTRUCTION FENCE

CF

SM-3 **Construction Fence (CF)**

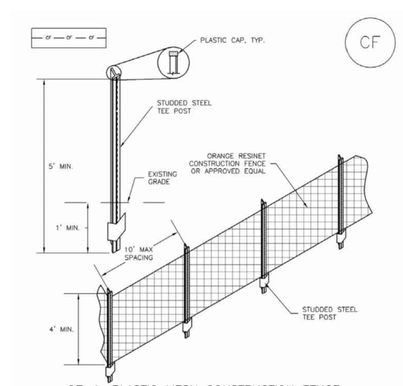

CF-1. PLASTIC MESH CONSTRUCTION FENCE

CONSTRUCTION FENCE INSTALLATION NOTES

1. SEE PLAN VIEW FOR:
   -LOCATION OF CONSTRUCTION FENCE.
2. CONSTRUCTION FENCE SHOWN SHALL BE INSTALLED PRIOR TO ANY LAND DISTURBING ACTIVITIES.
3. CONSTRUCTION FENCE SHALL BE COMPOSED OF ORANGE, CONTRACTOR-GRADE MATERIAL THAT IS AT LEAST 4' HIGH. METAL POSTS SHOULD HAVE A PLASTIC CAP FOR SAFETY.
4. STUDDED STEEL TEE POSTS SHALL BE UTILIZED TO SUPPORT THE CONSTRUCTION FENCE. MAXIMUM SPACING FOR STEEL TEE POSTS SHALL BE 10'.
5. CONSTRUCTION FENCE SHALL BE SECURELY FASTENED TO THE TOP, MIDDLE, AND BOTTOM OF EACH POST.

Construction Fence (CF) **SM-3**

CONSTRUCTION FENCE MAINTENANCE NOTES

1. INSPECT BMPs EACH WORKDAY, AND MAINTAIN THEM IN EFFECTIVE OPERATING CONDITION. MAINTENANCE OF BMPs SHOULD BE PROACTIVE, NOT REACTIVE. INSPECT BMPs AS SOON AS POSSIBLE (AND ALWAYS WITHIN 24 HOURS) FOLLOWING A STORM THAT CAUSES SURFACE EROSION, AND PERFORM NECESSARY MAINTENANCE.

2. FREQUENT OBSERVATIONS AND MAINTENANCE ARE NECESSARY TO MAINTAIN BMPs IN EFFECTIVE OPERATING CONDITION. INSPECTIONS AND CORRECTIVE MEASURES SHOULD BE DOCUMENTED THOROUGHLY.

3. WHERE BMPs HAVE FAILED, REPAIR OR REPLACEMENT SHOULD BE INITIATED UPON DISCOVERY OF THE FAILURE.

4. CONSTRUCTION FENCE SHALL BE REPAIRED OR REPLACED WHEN THERE ARE SIGNS OF DAMAGE SUCH AS RIPS OR SAGS. CONSTRUCTION FENCE IS TO REMAIN IN PLACE UNTIL THE UPSTREAM DISTURBED AREA IS STABILIZED AND APPROVED BY THE LOCAL JURISDICTION.

5. WHEN CONSTRUCTION FENCES ARE REMOVED, ALL DISTURBED AREAS ASSOCIATED WITH THE INSTALLATION, MAINTENANCE, AND/OR REMOVAL OF THE FENCE SHALL BE COVERED WITH TOPSOIL, SEEDED AND MULCHED, OR OTHERWISE STABILIZED AS APPROVED BY LOCAL JURISDICTION.

NOTE: MANY JURISDICTIONS HAVE BMP DETAILS THAT VARY FROM UDFCD STANDARD DETAILS. CONSULT WITH LOCAL JURISDICTIONS AS TO WHICH DETAIL SHOULD BE USED WHEN DIFFERENCES ARE NOTED.

(DETAIL ADAPTED FROM TOWN OF PARKER, COLORADO, NOT AVAILABLE IN AUTOCAD)

Farnsworth GROUP
5613 DTC PARKWAY, SUITE 1100
GREENWOOD VILLAGE, COLORADO 80111
(303) 692-8838 / info@f-w.com
www.f-w.com
Engineers | Architects | Surveyors | Scientists

ISSUE:

#	DATE:	DESCRIPTION:

PREPARED UNDER THE DIRECT SUPERVISION OF JAY M. NEWELL,PE, COLORADO LICENSE REGISTRATION NO.35219

PRELIMINARY
NOT FOR CONSTRUCTION
THESE DRAWINGS AND/OR SPECIFICATIONS ARE BEING ISSUED FOR INFORMATION ONLY. THEY ARE NOT INTENDED TO BE USED FOR FINAL PRICING OR FOR CONSTRUCTION. THEY ARE PRELIMINARY IN NATURE AND ARE SUBJECT TO CHANGE PRIOR TO ISSUANCE OF THE PROJECT CONSTRUCTION DOCUMENTS. ANY PRICING ATTAINED BY THE CONTRACTOR VIA THE USE OF THESE DOCUMENTS IS CONSIDERED TO BE AT THE RISK OF THE CONTRACTOR.

PROJECT:
CITY OF THORNTON
9500 CIVIC CENTER DRIVE
THORNTON, COLORADO 80229

CHERRY PARK IRRIGATION REHABILITATION, PROJECT 22-46B

11500 BIRCH DR,
THORNTON, CO
80233

DATE:	07/11/2025
DESIGNED:	JASP
DRAWN:	JASP
REVIEWED:	JMN
FIELD BOOK NO.:	-

SHEET TITLE:
SWMP DETAILS

SHEET NUMBER:
C4.91

PROJECT NO.: 0231420.00

jgreen | J:\2023\0231420.00 - Cherry Park Irrigation Rehabilitation\04_drawings\DWG\C1_Erosion - 0231420.00.dwg | 1/13/2026 7:12 PM |

ROCK SOCK

RS

SC-5 Rock Sock (RS)

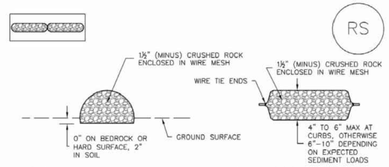

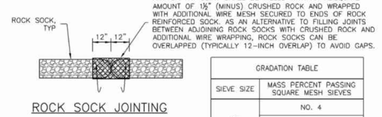

ANY GAP AT JOINT SHALL BE FILLED WITH AN ADEQUATE AMOUNT OF 1½" (MINUS) CRUSHED ROCK AND WRAPPED WITH ADDITIONAL WIRE MESH SECURED TO ENDS OF ROCK REINFORCED SOCK. AS AN ALTERNATIVE TO FILLING JOINTS BETWEEN ADJOINING ROCK SOCKS WITH CRUSHED ROCK AND ADDITIONAL WIRE WRAPPING, ROCK SOCKS CAN BE OVERLAPPED (TYPICALLY 12-INCH OVERLAP) TO AVOID GAPS.

GRADATION TABLE

SIEVE SIZE	MASS PERCENT PASSING SQUARE MESH SIEVES
	NO. 4
2"	100
1½"	90 – 100
1"	20 – 55
¾"	0 – 15
⅜"	0 – 5

MATCHES SPECIFICATIONS FOR NO. 4 COARSE AGGREGATE FOR CONCRETE PER AASHTO M43. ALL ROCK SHALL BE FRACTURED FACE. ALL SIDES.

ROCK SOCK INSTALLATION NOTES

1. SEE PLAN VIEW FOR:
   –LOCATION(S) OF ROCK SOCKS.
2. CRUSHED ROCK SHALL BE 1½" (MINUS) IN SIZE WITH A FRACTURED FACE (ALL SIDES) AND SHALL COMPLY WITH GRADATION SHOWN ON THIS SHEET (1½" MINUS).
3. WIRE MESH SHALL BE FABRICATED OF 10 GAGE POULTRY MESH, OR EQUIVALENT, WITH A MAXIMUM OPENING OF ½". RECOMMENDED MINIMUM ROLL WIDTH OF 48".
4. WIRE MESH SHALL BE SECURED USING "HOG RINGS" OR WIRE TIES AT 6" CENTERS ALONG ALL JOINTS AND AT 2" CENTERS ON ENDS OF SOCKS.
5. SOME MUNICIPALITIES MAY ALLOW THE USE OF FILTER FABRIC AS AN ALTERNATIVE TO WIRE MESH FOR THE ROCK ENCLOSURE.

RS–1. ROCK SOCK PERIMETER CONTROL

Rock Sock (RS) SC-5

ROCK SOCK MAINTENANCE NOTES

1. INSPECT BMPs EACH WORKDAY, AND MAINTAIN THEM IN EFFECTIVE OPERATING CONDITION. MAINTENANCE OF BMPs SHOULD BE PROACTIVE, NOT REACTIVE. INSPECT BMPs AS SOON AS POSSIBLE (AND ALWAYS WITHIN 24 HOURS) FOLLOWING A STORM THAT CAUSES SURFACE EROSSION, AND PERFORM NECESSARY MAINTENANCE.

2. FREQUENT OBSERVATIONS AND MAINTENANCE ARE NECESSARY TO MAINTAIN BMPs IN EFFECTIVE OPERATING CONDITION. INSPECTIONS AND CORRECTIVE MEASURES SHOULD BE DOCUMENTED THOROUGHLY.

3. WHERE BMPs HAVE FAILED, REPAIR OR REPLACEMENT SHOULD BE INITIATED UPON DISCOVERY OF THE FAILURE.

4. ROCK SOCKS SHALL BE REPLACED IF THEY BECOME HEAVILY SOILED, OR DAMAGED BEYOND REPAIR.

5. SEDIMENT ACCUMULATED UPSTREAM OF ROCK SOCKS SHALL BE REMOVED AS NEEDED TO MAINTAIN FUNCTIONALITY OF THE BMP. TYPICALLY WHEN DEPTH OF ACCUMULATED SEDIMENTS IS APPROXIMATELY ½ OF THE HEIGHT OF THE ROCK SOCK.

6. ROCK SOCKS ARE TO REMAIN IN PLACE UNTIL THE UPSTREAM DISTURBED AREA IS STABILIZED AND APPROVED BY THE LOCAL JURISDICTION.

7. WHEN ROCK SOCKS ARE REMOVED, ALL DISTURBED AREAS SHALL BE COVERED WITH TOPSOIL, SEEDED AND MULCHED OR OTHERWISE STABILIZED AS APPROVED BY LOCAL JURISDICTION.

(DETAIL ADAPTED FROM TOWN OF PARKER, COLORADO AND CITY OF AURORA, COLORADO, NOT AVAILABLE IN AUTOCAD)

NOTE: MANY JURISDICTIONS HAVE BMP DETAILS THAT VARY FROM UDFCD STANDARD DETAILS. CONSULT WITH LOCAL JURISDICTIONS AS TO WHICH DETAIL SHOULD BE USED WHEN DIFFERENCES ARE NOTED.

NOTE: THE DETAILS INCLUDED WITH THIS FACT SHEET SHOW COMMONLY USED, CONVENTIONAL METHODS OF ROCK SOCK INSTALLATION IN THE DENVER METROPOLITAN AREA. THERE ARE MANY OTHER SIMILAR PROPRIETARY PRODUCTS ON THE MARKET. UDFCD NEITHER NDORSES NOR DISCOURAGES USE OF PROPRIETARY PROTECTION PRODUCTS; HOWEVER, IN THE EVENT PROPRIETARY METHODS ARE USED, THE APPROPRIATE DETAIL FROM THE MANUFACTURER MUST BE INCLUDED IN THE SWMP AND THE BMP MUST BE INSTALLED AND MAINTAINED AS SHOWN IN THE MANUFACTURER'S DETAILS.

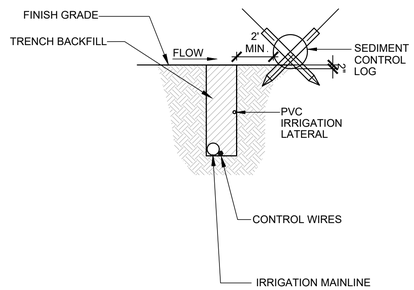

NOTE:

1. REFER TO IRRIGATION SPECIFICATIONS FOR COVERAGE DEPTH TO BURIED PIPE AND WIRE.
2. REFER THE CITY OF THORNTON DETAIL SHEET C4.91 FOR SEDIMENT CONTROL LOG INSTALLATION.

1 SEDIMENT CONTROL LOGS FOR TRENCHING

SCALE: NOT TO SCALE

STABILIZED STAGING AREA

SSA

Stabilized Staging Area (SSA) SM-6

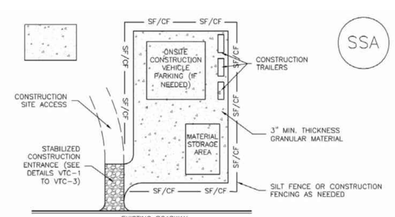

SSA–1. STABILIZED STAGING AREA

STABILIZED STAGING AREA INSTALLATION NOTES

1. SEE PLAN VIEW FOR
   –LOCATION OF STAGING AREA(S).
   –CONTRACTOR MAY ADJUST LOCATION AND SIZE OF STAGING AREA WITH APPROVAL FROM THE LOCAL JURISDICTION.
2. STABILIZED STAGING AREA SHOULD BE APPROPRIATE FOR THE NEEDS OF THE SITE. OVERSIZING RESULTS IN A LARGER AREA TO STABILIZE FOLLOWING CONSTRUCTION.
3. STAGING AREA SHALL BE STABILIZED PRIOR TO OTHER OPERATIONS ON THE SITE.
4. THE STABILIZED STAGING AREA SHALL CONSIST OF A MINIMUM 3" THICK GRANULAR MATERIAL.
5. UNLESS OTHERWISE SPECIFIED BY LOCAL JURISDICTION, ROCK SHALL CONSIST OF DOT SECT. #703, AASHTO #3 COARSE AGGREGATE OR 6" (MINUS) ROCK.
6. ADDITIONAL PERIMETER BMPs MAY BE REQUIRED INCLUDING BUT NOT LIMITED TO SILT FENCE AND CONSTRUCTION FENCING.

STABILIZED STAGING AREA MAINTENANCE NOTES

1. INSPECT BMPs EACH WORKDAY, AND MAINTAIN THEM IN EFFECTIVE OPERATING CONDITION. MAINTENANCE OF BMPs SHOULD BE PROACTIVE, NOT REACTIVE. INSPECT BMPs AS SOON AS POSSIBLE (AND ALWAYS WITHIN 24 HOURS) FOLLOWING A STORM THAT CAUSES SURFACE EROSSION, AND PERFORM NECESSARY MAINTENANCE.
2. FREQUENT OBSERVATIONS AND MAINTENANCE ARE NECESSARY TO MAINTAIN BMPs IN EFFECTIVE OPERATING CONDITION. INSPECTIONS AND CORRECTIVE MEASURES SHOULD BE DOCUMENTED THOROUGHLY.
3. WHERE BMPs HAVE FAILED, REPAIR OR REPLACEMENT SHOULD BE INITIATED UPON DISCOVERY OF THE FAILURE.
4. ROCK SHALL BE REAPPLIED OR REGRADED AS NECESSARY IF RUTTING OCCURS OR UNDERLYING SUBGRADE BECOMES EXPOSED.

SM-6 Stabilized Staging Area (SSA)

STABILIZED STAGING AREA MAINTENANCE NOTES

5. STABILIZED STAGING AREA SHALL BE ENLARGED IF NECESSARY TO CONTAIN PARKING, STORAGE, AND UNLOADING/LOADING OPERATIONS.

6. THE STABILIZED STAGING AREA SHALL BE REMOVED AT THE END OF CONSTRUCTION. THE GRANULAR MATERIAL SHALL BE REMOVED OR, IF APPROVED BY THE LOCAL JURISDICTION, USED ON SITE, AND THE AREA COVERED WITH TOPSOIL, SEEDED AND MULCHED OR OTHERWISE STABILIZED IN A MANNER APPROVED BY LOCAL JURISDICTION.

NOTE: MANY MUNICIPALITIES PROHIBIT THE USE OF RECYCLED CONCRETE AS GRANULAR MATERIAL FOR STABILIZED STAGING AREAS DUE TO DIFFICULTIES WITH RE-ESTABLISHMENT OF VEGETATION IN AREAS WHERE RECYCLED CONCRETE WAS PLACED.

NOTE: MANY JURISDICTIONS HAVE BMP DETAILS THAT VARY FROM UDFCD STANDARD DETAILS. CONSULT WITH LOCAL JURISDICTIONS AS TO WHICH DETAIL SHOULD BE USED WHEN DIFFERENCES ARE NOTED.

(DETAILS ADAPTED FROM DOUGLAS COUNTY, COLORADO, NOT AVAILABLE IN AUTOCAD)

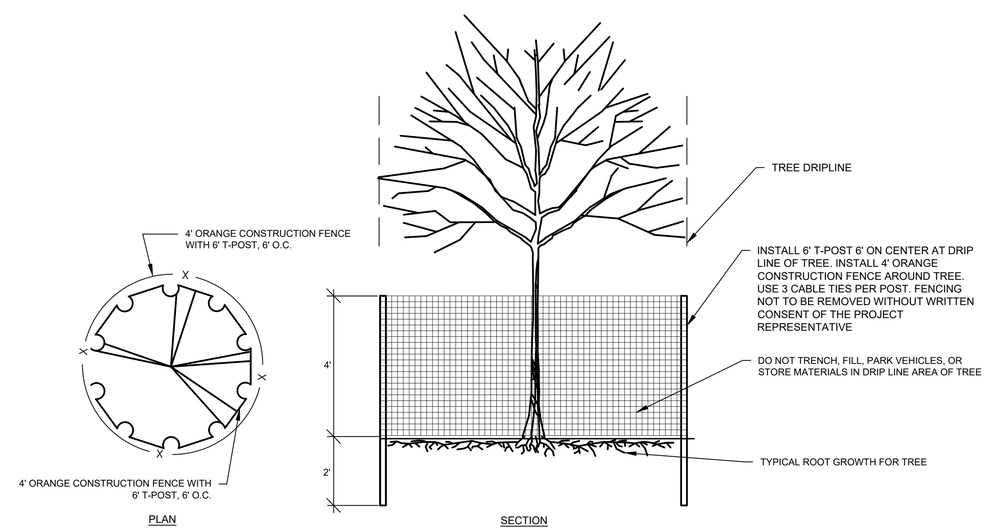

NOTES:

1. CONSTRUCTION FENCE SHALL BE INSTALLED PRIOR TO OTHER BMP'S AND ANY LAND DISTURBING ACTIVITIES.
2. ANY DAMAGED FENCE SHALL BE REPAIRED ON A DAILY BASIS.
3. CONTRACTOR WILL USE AIR SPADE FOR ALL TRENCHING UNLESS COORDINATED OTHERWISE WITH CITY.

2 TREE PROTECTION FENCING

SCALE: NOT TO SCALE

Farnsworth GROUP
5613 DTC PARKWAY, SUITE 1100
GREENWOOD VILLAGE, COLORADO 80111
(303) 692-8838 / info@f-w.com
www.f-w.com
Engineers | Architects | Surveyors | Scientists

ISSUE:

#	DATE:	DESCRIPTION:

PREPARED UNDER THE DIRECT SUPERVISION OF JAY M. NEWELL,PE, COLORADO LICENSE REGISTRATION NO.35219

PRELIMINARY
NOT FOR CONSTRUCTION
THESE DRAWINGS AND/OR SPECIFICATIONS ARE BEING ISSUED FOR INFORMATION ONLY. THEY ARE NOT INTENDED TO BE USED FOR FINAL PRICING OR FOR CONSTRUCTION. THEY ARE PRELIMINARY IN NATURE AND ARE SUBJECT TO CHANGE PRIOR TO ISSUANCE OF THE PROJECT CONSTRUCTION DOCUMENTS. ANY PRICING ATTAINED BY THE CONTRACTOR VIA THE USE OF THESE DOCUMENTS IS CONSIDERED TO BE AT THE RISK OF THE CONTRACTOR.

PROJECT:

CITY OF THORNTON
9500 CIVIC CENTER DRIVE
THORNTON, COLORADO 80229

CHERRY PARK IRRIGATION REHABILITATION, PROJECT 22-46B

11500 BIRCH DR,
THORNTON, CO
80233

DATE:	07/11/2025
DESIGNED:	JASP
DRAWN:	JASP
REVIEWED:	JMN
FIELD BOOK NO.:	-

SHEET TITLE:

SWMP DETAILS

SHEET NUMBER:

C4.92

PROJECT NO.: 0231420.00

jgreen | J:\2023\0231420.00 - Cherry Park Irrigation Rehabilitation\04_drawings\UNC\01_Erosion - 0231420.00.dwg | 1/13/2026 7:12 PM |

ELECTRICAL GENERAL NOTES - APPLICABLE TO ALL ELECTRICAL SHEETS

1. PRIOR TO SUBMITTING BIDS THE ELECTRICAL CONTRACTOR SHALL VISIT THE SITE TO VERIFY EXISTING ELECTRICAL EQUIPMENT CONDITIONS AND DIFFICULTIES THAT WILL AFFECT EXECUTION OF THE WORK. FIELD VERIFY QUANTITIES OF EXISTING LIGHT FIXTURES, ELECTRICAL DEVICES, COMMUNICATION DEVICES, FIRE ALARM DEVICES, AND ELECTRICAL EQUIPMENT. NOTIFY THE ARCHITECT AND ENGINEER OF ANY EXISTING CONDITIONS WHICH MODIFY THE SCOPE OF WORK AS SHOWN ON THE CONSTRUCTION DOCUMENTS. SUBMISSION OF A BID PROPOSAL WILL BE CONSTRUED AS EVIDENCE THAT SUCH AN EXAMINATION HAS BEEN MADE AND LATER CLAIMS FOR MOBILIZATION, LABOR, EQUIPMENT, AND/OR MATERIALS REQUIRED BECAUSE OF DIFFICULTIES ENCOUNTERED WILL NOT BE RECOGNIZED.

2. THE ELECTRICAL CONTRACTOR SHALL EXAMINE THE DRAWINGS OF ALL TRADES WHOSE WORK RELATES TO OR IS DEPENDENT ON ELECTRICAL WORK TO BECOME FULLY INFORMED OF THE EXTENT AND CHARACTER OF THEIR SPECIFIED WORK AND BE ABLE TO COORDINATE IT WHILE AVOIDING POSSIBLE INTERFERENCE WITH THE ELECTRICAL WORK.

3. IT IS THE INTENTION OF THESE SPECIFICATIONS AND DRAWINGS TO CALL FOR FINISHED WORK, TESTED AND READY FOR OPERATION. WHEREVER THE WORD "PROVIDE" IS USED, IT SHALL MEAN "FURNISH AND INSTALL COMPLETE AND READY FOR USE." "REPLACE" SHALL MEAN TO PUT NEW IN PLACE OF EXISTING. THE ARCHITECTURAL GENERAL AND SPECIAL CONDITIONS FOR THE WORK OF THIS PROJECT AND BASE BUILDING SPECIFICATIONS SHALL BE PART OF THE ELECTRICAL SPECIFICATIONS. THE ELECTRICAL CONTRACTOR SHALL EXAMINE THE GENERAL AND SPECIAL CONDITIONS BEFORE SUBMITTING A BID.

4. ALONGSIDE SUBMISSION OF THE BID, THE ELECTRICAL CONTRACTOR SHALL GIVE WRITTEN NOTICE TO THE ARCHITECT/ENGINEER OF ANY NECESSARY ITEMS OR WORK THAT HAVE BEEN OMITTED FROM THE DRAWINGS OR SPECIFICATIONS. IN THE ABSENCE OF SUCH WRITTEN NOTICE, IT IS MUTUALLY AGREED THAT THE ELECTRICAL CONTRACTOR HAS INCLUDED THE COST OF ALL REQUIRED ITEMS IN HIS BID, AND THAT THE ELECTRICAL CONTRACTOR WILL BE RESPONSIBLE FOR THE APPROVED SATISFACTORY FUNCTIONING OF THE ENTIRE SYSTEM WITHOUT EXTRA COMPENSATION.

5. THE CONTRACTOR IS RESPONSIBLE FOR THE COMPLETE AND SATISFACTORY ELECTRICAL INSTALLATION IN ACCORDANCE WITH THE TRUE INTENT OF THE DRAWINGS AND SPECIFICATIONS. HE SHALL PROVIDE, WITHOUT EXTRA CHARGE, ALL INCIDENTAL ITEMS REQUIRED, AS A PART OF THIS ELECTRICAL INSTALLATION. THE INSTALLATION SHALL BE SO MADE THAT ITS SEVERAL COMPONENT PARTS WILL FUNCTION TOGETHER AS A WORKABLE SYSTEM AND SHALL BE LEFT WITH ALL PARTS ADJUSTED AND IN WORKING ORDER.

6. ELECTRICAL CONTRACTOR SHALL OBTAIN AND PAY FOR ALL LOCAL FEES, PERMITS, AND SERVICES OF INSPECTION AUTHORITIES REQUIRED BY ELECTRICAL WORK FOR THIS ELECTRICAL CONSTRUCTION. FILE ALL NECESSARY PLANS, PREPARE ALL DOCUMENTS, AND OBTAIN ALL NECESSARY APPROVALS REQUIRED BY ALL GOVERNMENTAL DEPARTMENTS HAVING JURISDICTION. ALL WORK PERFORMED UNDER THIS CONTRACT SHALL REMAIN EXPOSED TO VIEW UNTIL APPROVED BY THE INSPECTION AUTHORITY.

7. ELECTRICAL CONTRACTOR SHALL FULLY COORDINATE WITH OWNER REPRESENTATIVES. ALL ELECTRICAL WORK PERFORMED UNDER THIS CONTRACT SHALL CONFORM WITH LATEST EDITIONS OF THE NATIONAL ELECTRICAL CODE, INTERNATIONAL BUILDING CODE, LOCAL BUILDING AND FIRE DEPARTMENT REQUIREMENTS. PERFORM WORK IN ACCORDANCE WITH REQUIREMENTS OF OWNER REPRESENTATIVE.

8. ELECTRICAL CONTRACTOR SHALL NOTIFY THE ARCHITECT AND ENGINEER OF ANY CHANGES REQUIRED BY THE BUILDING MANAGEMENT AND TENANT REPRESENTATIVES.

9. BEFORE STARTING WORK, ELECTRICAL CONTRACTOR SHALL PREPARE AND SUBMIT TO THE ARCHITECT/ENGINEER SHOP DRAWINGS, BROCHURES, INSTALLATION INSTRUCTIONS, AND DESCRIPTIVE EQUIPMENT DATA RELATED TO SPECIFIED EQUIPMENT, WIRING DEVICES, AND ACCESSORIES FOR APPROVAL. ELECTRONIC SUBMITTALS (PDF OR SIMILAR) ARE ACCEPTABLE. THE CONTRACTOR SHALL IDENTIFY ANY "LONG LEAD TIME" ITEMS WHICH MAY IMPACT THE OVERALL PROJECT SCHEDULE. ALL BIDS SHALL INCLUDE COSTS ASSOCIATED WITH THE PURCHASE AND DELIVERY OF EQUIPMENT TO MEET THE PROJECT SCHEDULE. NO EQUIPMENT SHALL BE ORDERED, PURCHASED, OR INSTALLED PRIOR TO THE APPROVAL OF SHOP DRAWINGS, BROCHURES, INSTALLATION INSTRUCTIONS, AND SCHEDULES. APPROVAL BY THE ARCHITECT/ENGINEER IS INTENDED TO ESTABLISH CONFORMANCE WITH THE PROJECT DESIGN CONCEPT AND THE REQUIREMENTS OF THE DRAWINGS AND SPECIFICATIONS.

10. THE NAMING OF THE MANUFACTURER OR BRAND WITH CATALOG NUMBER OR OTHER PRODUCT IDENTIFICATION WITHOUT THE WORDS "OR EQUAL" IN THE SPECIFICATIONS OR NOTES SHALL INDICATE THAT IT IS THE ONLY PRODUCT APPROVED FOR PURCHASE. IF THE WORDS "OR EQUAL" ARE USED THEY SHALL BE INTERPRETED AS ESTABLISHING A QUALITY OR PERFORMANCE STANDARD FOR THE MATERIAL OR PRODUCT TO BE PURCHASED. THIS SHALL INDICATE THAT THE ELECTRICAL CONTRACTOR IS NOT RESTRICTED TO THE USE OF THE NAMED AND IDENTIFIED PRODUCT IF A SUBSTITUTE APPROVED BY THE ARCHITECT/ENGINEER IS AVAILABLE. HOWEVER, WHERE A SUBSTITUTION IS REQUESTED, IT WILL BE PERMITTED ONLY WITH THE WRITTEN APPROVAL OF THE ARCHITECT/ENGINEER. NO SUBSTITUTE MATERIAL OR PRODUCT SHALL BE ORDERED, FABRICATED, SHIPPED OR PROCESSED IN ANY MATTER PRIOR TO THE APPROVAL OF THE ARCHITECT/ENGINEER. THE ELECTRICAL CONTRACTOR SHALL ASSUME ALL RESPONSIBILITY FOR ADDITIONAL EXPENSES AS REQUIRED MAKING CHANGES FROM THE ORIGINAL MATERIAL OR PRODUCT SPECIFIED.

11. THE ELECTRICAL DRAWINGS ARE DIAGRAMMATIC AND INDICATE THE GENERAL ARRANGEMENT OF ELECTRICAL WORK. LOCATIONS ARE APPROXIMATE AND SHALL BE SUBJECT TO MINOR MODIFICATIONS AS DIRECTED BY THE GENERAL CONTRACTOR AND OWNER REPRESENTATIVES. ELECTRICAL CONTRACTOR SHALL BE RESPONSIBLE FOR THE EXACT FITTING OF ALL MATERIALS, EQUIPMENT, ETC., IN THE BUILDING AND TENANT SPACE. ALL DIMENSIONS SHALL BE VERIFIED ON THE JOB.

12. DRAWINGS SHALL NOT BE SCALED FOR ROUGH-IN MEASUREMENTS OR USED AS SHOP DRAWINGS, WHERE DIMENSIONS ARE SHOWN ON PLANS OR DETAILS, THESE DIMENSIONS ARE TO BE FIELD-VERIFIED BY THE ELECTRICAL CONTRACTOR AGAINST EXISTING FIELD CONDITIONS, INSTALLATION REQUIREMENTS OF OTHER TRADES, AND THE MANUFACTURER'S SUBMITTALS FOR EQUIPMENT TO BE INSTALLED. SHOULD ANY CONFLICTS ARISE WHICH CANNOT BE EASILY RESOLVED IN THE FIELD WITHOUT CHANGING THE DESIGN INTENT, THE ELECTRICAL CONTRACTOR SHALL NOTIFY THE ENGINEER IMMEDIATELY.

13. WHILE ALL WORK IS IN PROGRESS, EXCEPT FOR SHORT DESIGNATED INTERVALS DURING WHICH CONNECTIONS ARE TO BE MADE, CONTINUITY OF SERVICE TO ALL EXISTING SYSTEMS SERVING OCCUPIED SPACES SHALL BE MAINTAINED. THE CONTRACTOR SHALL COORDINATE AND COOPERATE WITH OWNER AT ALL TIMES FOR ALL NEW-TO-EXISTING CONNECTIONS, SYSTEM SHUTDOWNS, AND RESTART-UP.

14. ANY WORK WHICH WILL AFFECT THE BUILDING OCCUPANTS, INCLUDING, BUT NOT LIMITED TO WORK WHICH GENERATES EXCESSIVE NOISE, DUST, SMOKE, OR INCONVENIENCE TO BUILDING OCCUPANTS, SHALL BE PERFORMED AFTER BUSINESS HOURS. UNLESS PRIOR APPROVAL HAS BEEN OBTAINED FROM THE BUILDING MANAGER OR OWNER.

15. ELECTRICAL ITEMS AFFECTED BY REMODEL WORK ARE SHOWN ON DRAWINGS ALONG WITH EXISTING ELECTRICAL INSTALLATION SHOWN WITH LIGHT LINE WEIGHT. EXISTING ELECTRICAL INSTALLATION SHOWN IS NOT NECESSARILY ALL-INCLUSIVE. RETAIN CIRCUIT CONTINUITY FOR EXISTING ELECTRICAL EQUIPMENT, FIXTURES, AND DEVICES THAT ARE TO REMAIN. SUCH EQUIPMENT SHALL BE RECONNECTED TO EXISTING CIRCUITS OR CONNECTED TO NEW CIRCUIT(S) AS INDICATED ON DRAWINGS. ENSURE ALL ELECTRICAL DEVICES IN WORK AREA ARE FULLY FUNCTIONAL. FOR DEVICES OR JUNCTION BOXES LOCATED IN WALLS, THAT MUST REMAIN IN PLACE FOR CIRCUIT CONTINUITY, PROVIDE BLANK COVER PLATES TO MATCH WALL PLATES STYLE IN THE AREA OF WORK. FOR ALL OTHER UNUSED JUNCTION BOXES, REMOVE WIRING AND PROVIDE BLANK COVER PLATE, OR COORDINATE WITH GENERAL CONTRACTOR FOR PATCHING OF WALL TO MATCH ADJACENT SURFACE AS DIRECTED BY ARCHITECT. WHERE EXISTING DEVICES CONFLICT WITH NEW WALL CONSTRUCTION, RELOCATE EXISTING DEVICE AND REWORK CIRCUITRY AS REQUIRED TO MAINTAIN CIRCUIT CONTINUITY. DEVICES MAY ONLY BE REMOVED WITH PRIOR APPROVAL FROM THE DESIGN TEAM AND BUILDING MANAGEMENT. COORDINATE FINAL DIRECTIONS WITH ARCHITECT PRIOR TO DEMOLITION.

16. REPORT ANY EXISTING DAMAGED EQUIPMENT OR SYSTEMS TO THE OWNER PRIOR TO BEGINNING THE PROJECT.

17. BEFORE ANY EQUIPMENT IS INSTALLED, DETERMINE THAT SAID EQUIPMENT WILL PROPERLY FIT WITHIN THE SPACE ALLOCATED. INSTALL ALL EQUIPMENT AND MATERIALS IN SUCH A MANNER AS TO PROVIDE REQUIRED ACCESS FOR SERVICING AND MAINTENANCE. ALLOW AMPLE SPACE FOR REMOVAL OF ALL PARTS THAT REQUIRE REPLACEMENT OR SERVICING.

18. MINIMUM WORKING CLEARANCES PER THE LATEST EDITION OF THE NATIONAL ELECTRICAL CODE SHALL BE PROVIDED AROUND AND IN FRONT OF ALL ELECTRICAL EQUIPMENT.

19. ALL CIRCUIT BREAKER LUGS SHALL BE RATED FOR A MINIMUM OF 75 DEGREES CELSIUS.

20. ALL MATERIALS AND EQUIPMENT SHALL BE NEW, UNDAMAGED, BEAR THE UL LABEL WHERE APPLICABLE, AND BE AS SPECIFIED FOR USE IN EACH SPECIFIC LOCATION. ANY INCIDENTAL ACCESSORIES NECESSARY TO COMPLETE THE WORK IN ALL RESPECTS AND MAKE IT READY FOR OPERATION, EVEN IF NOT SPECIFICALLY SPECIFIED, SHALL BE FURNISHED, DELIVERED, AND INSTALLED BY THE ELECTRICAL CONTRACTOR WITHOUT ADDITIONAL EXPENSE TO THE CLIENT.

21. MINOR DETAILS NOT USUALLY SHOWN OR SPECIFIED, BUT NECESSARY FOR THE PROPER INSTALLATION AND OPERATION OF A SYSTEM OR EQUIPMENT, SHALL BE INCLUDED IN THE ELECTRICAL CONTRACTOR'S ESTIMATE, AS IF SPECIFIED HEREIN OR SHOWN.

22. NEUTRALS, RACEWAYS, AND NON-CURRENT CARRYING PARTS OF ELECTRICAL EQUIPMENT AND ASSOCIATED ENCLOSURES SHALL BE GROUNDED IN FULL ACCORDANCE WITH THE NATIONAL ELECTRICAL CODE. PROVIDE HARD WIRE GROUND CONNECTIONS TO ALL DEVICES AND SEPARATE, CONTINUOUS, INSULATED GROUND WIRE IN EACH CIRCUIT (#12 CU MINIMUM "GREEN" TRACER GROUND). COORDINATE EQUIPMENT GROUNDING CONDUCTOR WIRE SIZE WITH MANUFACTURER REQUIREMENTS.

23. CONDUIT JOINTS SHALL BE CUT SQUARE, THREADED, REAMED SMOOTH, AND DRAWN UP TIGHT. BENDS OR OFFSETS SHALL BE MADE WITH AN APPROVED BENDER OR HICKEY, OR HUB-TYPE CONDUIT FITTINGS. THE NUMBER OF BENDS PER RUN SHALL CONFORM TO THOSE STATED IN CURRENT NEC.

24. WHERE POSSIBLE ALL WIRING SHALL BE RUN CONCEALED. ALL HOME RUNS SHALL BE EMT. CONCEALED CONDUIT SYSTEMS SHALL BE RUN IN A DIRECT LINE WITH LONG SWEEP BENDS AND AND OFFSETS. EXPOSED CONDUIT RUNS SHALL BE PARALLEL TO AND AT RIGHT ANGLES TO BUILDING LINES, USING CONDUIT FITTINGS FOR ALL TURNS AND OFFSETS. ALL EMPTY CONDUITS SHALL BE SUPPLIED WITH PULL WIRES AND BUSHINGS.

25. "MC" AND "AC" TYPE CABLE WITH INTERNAL GROUND WIRES SHALL BE PERMITTED FOR BRANCH CIRCUIT WIRING WHERE APPROVED IN WRITING BY BUILDING MANAGEMENT AND THE LOCAL AHJ ONLY AND INSTALLED PER NATIONAL ELECTRICAL CODE AND LOCAL BUILDING DEPARTMENT REQUIREMENTS. USE LISTED AND APPROVED TYPE COUPLINGS AND CONNECTORS. PROVIDE CONDUIT SUPPORTS AS REQUIRED BY THE NATIONAL ELECTRICAL CODE AS A MINIMUM.

26. ELECTRICAL CONTRACTOR SHALL FURNISH AND INSTALL JUNCTION AND PULL BOXES TO PROVIDE ACCESS POINTS FOR PULLING AND FEEDING CONDUCTORS INTO A RACEWAY SYSTEM. JUNCTION AND PULL BOXES AND THEIR COVERS SHALL BE FORMED FROM SHEET STEEL AND SHALL BE FINISHED IN GRAY ENAMEL PAINT. BOXES SHALL BE IN INDUSTRY STANDARD SIZES. OUTLET BOXES WITH THE CORRECT FITTING FOR THE APPLICATION SHALL BE LOCATED AT EACH CONDUCTOR SPLICE POINT, AT EACH OUTLET, SWITCH POINT, OR JUNCTION POINT, AND AT EACH PULL POINT FOR THE CONNECTION OF CONDUIT AND OTHER RACEWAYS. OUTLET BOXES FOR CONCEALED WIRING SHALL BE MADE FROM GALVANIZED OR CADMIUM-PLATED SHEET STEEL, AND THEY SHALL HAVE A DEPTH OF AT LEAST 1.5 INCHES, WHETHER SINGLE OR GANGED. THE BOXES SHALL BE LARGE ENOUGH SIZE TO ACCOMMODATE THE NUMBER OF WIRING DEVICES AND CONDUCTORS AS SPECIFIED IN THE FILL SCHEDULE OF THE CURRENT NEC. SECURE BOXES WITH MOUNTING BRACKET, BRACES, HANGER OR BOX MOUNTING SUPPORT.

27. ALL JUNCTION BOX COVERS SHALL BE INDELIBLY LABELED WITH PANEL DESIGNATION AND BRANCH CIRCUIT NUMBER OF EACH WIRE WITHIN THE JUNCTION BOX. PANELS/DISCONNECTS/TRANSFORMERS AND SIMILAR MUST BE LABELED WITH THEIR SOURCE AND WITH CALCULATED AIC VALUE/DATE.

28. ALL WIRING SHALL BE COPPER, TYPE THHN OR THWN INSULATION, UNLESS SPECIFICALLY NOTED OTHERWISE. MINIMUM SIZE SHALL BE #12 AWG. CONDUCTORS SHALL BE FACTORY COLOR-CODED WITH WIRE COLOR CODING AS REQUIRED BY THE NATIONAL ELECTRICAL CODE AND USING STANDARD CONDUCTOR COLOR CODES:

120/208 VOLTS:		277/480 VOLTS:	
A:	BLACK	A:	BROWN
B:	RED	B:	ORANGE
C:	BLUE	C:	YELLOW
NEU:	WHITE	NEU:	GRAY
GND:	GREEN	GND:	GREEN

ISO. G: GREEN W/YELLOW STRIPE

29. RECEPTACLES FOR COMPUTERS, COPIERS, AND PRINTERS, WHICH ARE SEMI-DEDICATED, DEDICATED, OR ISOLATED, SHALL HAVE A SEPARATE NEUTRAL AND DEDICATED GROUND CONDUCTOR RUN FROM THE BRANCH CIRCUIT PANEL BOARD.

30. ALL JOINTS OR SPLICES FOR 10 AWG. CONDUCTORS OR SMALLER SHALL BE MADE WITH UL-APPROVED WIRE NUTS, OR COMPRESSION-TYPE CONNECTORS.

31. ALL JOINTS OR SPLICES FOR CONDUCTORS 8 AWG AND LARGER SHALL BE MADE WITH A MECHANICAL COMPRESSION OR BOLTED CONNECTOR. AFTER THE CONDUCTORS HAVE BEEN MADE MECHANICALLY AND ELECTRICALLY SECURE, THE ENTIRE JOINT OR SPLICE SHALL BE COVERED WITH 3M SCOTCH BRAND NO. 33 TAPE OR APPROVED EQUAL, TO MAKE THE INSULATION VALUE AT THE JOINT OR SPLICE EQUAL TO THE VALUE OF THE CONDUCTOR INSULATION. ALL CONNECTORS SHALL BE UL APPROVED.

32. ALL NEW MULTI-WIRE BRANCH CIRCUITS SHALL INCLUDE SEPARATE NEUTRAL CONDUCTORS OR BREAKER TIES AS REQUIRED BY CURRENT NEC SECTION 210.4 (B).

33. VOLTAGE DROP: THE ELECTRICAL CONTRACTOR SHALL ENSURE THAT VOLTAGE DROP FOR FEEDERS TO DISTRIBUTION EQUIPMENT DOES NOT EXCEED 2% AND VOLTAGE DROP IN BRANCH CIRCUITING DOES NOT EXCEED 3% FOR OVERALL VOLTAGE DROP OF 5% (MAXIMUM). FEEDERS LISTED ON SCHEDULES AND THE ELECTRICAL ONE-LINE DIAGRAM ARE A BASE FEEDER/BRANCH CIRCUIT SIZE AND SHALL BE ADJUSTED AS NEEDED BASED ON ACTUAL LENGTHS OF CONDUCTORS.

34. FOR ALUMINUM CONDUCTOR TERMINATIONS, ALUMINUM BI-METALLIC PIN CONNECTORS ARE REQUIRED UNLESS COMPACT CONDUCTORS ARE USED. THESE CONNECTORS SHALL BE UL LISTED PER UL 486B AND RATED FOR USE UP TO 600V AND TEMPERATURE UP TO 90°C. CONNECTORS SHALL BE INSTALLED WITH MANUFACTURER'S SPECIFIED CRIMPING TOOLS AND DIES.

35. ELECTRICAL CONTRACTOR SHALL COMPLY WITH NEC AND LOCAL CODES FOR CONDUIT FILL REQUIREMENTS DEPENDING ON WIRE SIZES, QUANTITY, AND CORRECTION FACTORS. COORDINATE WITH LOCAL AUTHORITY HAVING JURISDICTION IF UPGRADE OF THE EXISTING ELECTRICAL INSTALLATION IS REQUIRED. THIS UPGRADE MAY INCLUDE REPLACEMENT OF THE EXISTING CONDUITS AND WIRING AFFECTED BY SCOPE OF THIS PROJECT TO ACCOMMODATE CURRENT CODE CONDUIT FILL AND CORRECTION REQUIREMENTS. INCLUDE COST ASSOCIATED WITH THIS UPGRADE IN THE BID.

36. ELECTRICAL CABINETS AND ENCLOSURES LOCATED IN PUBLIC AREAS SHALL BE LOCKABLE TYPE.

37. RACEWAYS SHALL BE PROVIDED WITH EXPANSION FITTINGS WHERE NECESSARY TO COMPENSATE FOR THERMAL EXPANSION AND CONTRACTION, AND TO ALLOW FOR MINOR MOVEMENT OF THE STRUCTURAL ELEMENTS OF THE BUILDING EXPANSION FITTINGS FOR METAL RACEWAYS SHALL BE MADE ELECTRICALLY CONTINUOUS BY EQUIPMENT BONDING JUMPERS OR OTHER MEANS.

38. PROVIDE TYPEWRITTEN, UPDATED PANELBOARD DOOR DIRECTORIES FOR ALL AFFECTED PANELS PER NEC 408.4, REFLECTING ACCURATE BRANCH CIRCUIT DESTINATIONS. CLEARLY MARK JUNCTION BOXES IN CEILING SPACE WITH PANEL DESIGNATIONS AND CIRCUIT NUMBERS. PROVIDE NEW ENGRAVED PLASTIC LABELS TO REPLACE ANY DAMAGED MISLABELED, TEMPORARY OR OTHERWISE ILLEGIBLE EXISTING IDENTIFICATION LABELS FOR DISTRIBUTION EQUIPMENT AFFECTED BY THIS CONTRACT. ATTACH THESE LABELS PERMANENTLY TO EQUIPMENT WITH RIVETS OR SCREWS. ALL PANEL SCHEDULES SHALL INDICATE THE NAME OF THE UPSTREAM PANEL OR SWITCHBOARD PROVIDING POWER.

39. CLEAN EXPOSED PANEL BOARD SURFACES AND CHECK TIGHTNESS OF ELECTRICAL CONNECTIONS. REPLACE DAMAGED CIRCUIT BREAKERS AS REQUIRED AND PROVIDE CLOSURE PLATES FOR VACANT SPACES. ALL NEW PANELS PROVIDED UNDER THIS CONTRACT SHALL BE DOOR-IN-DOOR CONSTRUCTION TYPE, WITH BOLT-ON CIRCUIT BREAKERS AND COPPER BUSSING, UNLESS SPECIFICALLY NOTED OTHERWISE.

40. CODE REQUIRED MAINTENANCE RECEPTACLES FOR MECHANICAL OR ELECTRICAL EQUIPMENT SHALL BE GFCI.

RECORD DOCUMENTS

1. RECORD DOCUMENTS: THE ELECTRICAL CONTRACTOR SHALL MAINTAIN ACCURATE RECORDS OF ALL DEVIATIONS IN WORK AS INSTALLED FROM WORK SPECIFIED ON THE DRAWINGS OR IN THE SPECIFICATIONS AND IDENTIFY ORIGIN OF CHANGE.

2. KEEP A COMPLETE SET OF RECORD DOCUMENT PRINTS IN CUSTODY DURING ENTIRE PERIOD OF CONSTRUCTION AT THE CONSTRUCTION SITE. ON COMPLETION OF THE PROJECT, TWO COMPLETE SETS OF MARKED-UP PRINTS SHOWING THESE DEVIATIONS SHALL BE DELIVERED TO GENERAL CONTRACTOR AND ARCHITECT/ENGINEER. THIS CONTRACT WILL NOT BE CONSIDERED COMPLETED UNTIL THESE RECORD DRAWINGS HAVE BEEN RECEIVED AND REVIEWED BY THE ENGINEER. DOCUMENTS TO INCLUDE ALL O & M MANUALS AND INSTRUCTIONS.

WARRANTY

1. PROVIDE COMPLETE WARRANTY INFORMATION FOR EACH ITEM, WHICH SHALL INCLUDE NAME OF PRODUCT OR EQUIPMENT: DATE OF BEGINNING OF WARRANTY OR BOND; DURATION OF WARRANTY OR BOND; AND NAMES, ADDRESSES, AND TELEPHONE NUMBERS OF MANUFACTURING/SERVICING PERSONNEL AS WELL AS PROCEDURES FOR FILING A CLAIM AND OBTAINING WARRANTY SERVICES.

2. THE CONTRACTOR SHALL WARRANT ALL MATERIALS, WORKMANSHIP AND THE SUCCESSFUL OPERATION OF ALL EQUIPMENT AND APPARATUS INSTALLED FOR A PERIOD OF ONE (1) YEAR FROM THE DATE OF FINAL ACCEPTANCE OF THE ENTIRE WORK AS IDENTIFIED IN THE GENERAL CONDITIONS.

ELECTRICAL SYMBOLS LEGEND

SWITCHING

SYMBOL	DESCRIPTION	SYMBOL	DESCRIPTION
S	SINGLE POLE SWITCH	SD	DIMMER SWITCH
S2	DOUBLE POLE SWITCH	SK	KEYED SWITCH
S3	THREE WAY SWITCH	STO	THERMAL OVERLOAD SWITCH
S4	FOUR WAY SWITCH	SS	GANGED SWITCHES
SM (WALL) / OC (CEILING)	OCCUPANCY SENSOR FOR LIGHTING CONTROLS		

ABBREVIATIONS

ABBR.	DESCRIPTION
AFF	ABOVE FINISHED FLOOR
AC	ABOVE COUNTER
GFI	GROUND FAULT CIRCUIT INTERRUPTER
GND	GROUND
IG	ISOLATED GROUND
NL	NIGHT LIGHT
RL	RELOCATED DEVICE OR EQUIPMENT
WP	WEATHER PROOF
EM	EMERGENCY
HD	HEAVY DUTY
TR	TAMPER RESISTANT
EG	EGRESS LIGHTING
X	AUTOMATICALLY CONTROLLED DEVICE

POWER

SYMBOL (WALL / CEILING / FLOOR)	DESCRIPTION
J / J / J	JUNCTION BOX
(NOTE)	DUPLEX RECEPTACLE
(NOTE)	DEDICATED DUPLEX RECEPTACLE
(NOTE)	DOUBLE DUPLEX RECEPTACLE
(NOTE)	DEDICATED DOUBLE RECEPTACLE
	SPECIAL PURPOSE RECEPTACLE

SYMBOL	DESCRIPTION	SYMBOL	DESCRIPTION
C	CONTACTOR		FLOOR SURFACE DUPLEX
	SIMPLEX RECEPTACLE		FLOOR SURFACE DOUBLE DUPLEX
	PUSH BUTTON		

SURFACE / RECESSED	DESCRIPTION
	NEW ELECTRICAL PANEL
	EXISTING ELECTRICAL PANEL
	DEMO ELECTRICAL PANEL

SYMBOL	DESCRIPTION	SYMBOL	DESCRIPTION
	DISCONNECT, NON FUSED		DISCONNECT, FUSED
	GROUND BAR	P B	PULLBOX
M	MOTOR	T F	TRANSFORMER
TC	TIMECLOCK	M	METER
WH	WATER HEATER		SWITCHBOARD
PP	POWER POLE		COMBINATION POWER/COMM. FLOOR BOX
PM	PLUGMOLD		
WM	WIREMOLD		

ONE-LINE

SYMBOL	DESCRIPTION	SYMBOL	DESCRIPTION
	PANEL BOARD		FUSED DISCONNECT WITHIN SWITCHBOARD
	NON-FUSED DISCONNECT SWITCH		TRANSFER SWITCH
	FUSED DISCONNECT SWITCH	G	GENERATOR
T F	EXTERIOR PAD-MOUNTED TRANSFORMER	M	METER
T F	INTERIOR TRANSFORMER		WEATHER HEAD
C T	CURRENT TRANSFORMER		CURRENT TRANSFORMER
P B	PULL BOX		GROUNDING CONDUCTOR
SPARE	SPARE SWITCH WITHIN SWITCHBOARD	M	MOTOR
		SPACE	SPACE WITHIN SWITCHBOARD
			CIRCUIT BREAKER

CIRCUITING

SYMBOL	DESCRIPTION
	HOMERUN, SOLID 120/208 V, OPEN 277/480 V
	CIRCUIT; RUN CONCEALED IN WALL OR CEILING
	CIRCUIT; RUN CONCEALED IN FLOOR OR GRADE
	CONDUIT RISER; TURNED UP, TURNED DOWN
UGE	UNDERGROUND ELECTRICAL

3-PHASE FAULT CURRENT CALCULATIONS

Source Point	Source Location	Source Value (Iaic) A	Sets (n) #	Wire Size	Length (L) ft.	Feeder Type	Conduit Type	Primary Voltage (Vp) V	Secondary Voltage (Vs) V	XFMR Size (kVA)	XFMR Z (%)	Wire Factor (C)	Isc Point	Fault Location	Fault Value (Isc) A	Equip. Rating (A)	Notes
-	-	-	-	-	-	-	-	-	208	75.0	-	-	1	UTILITY XFMR	13,000	-	-
1	UTILITY XFMR	13,000	1	000	34	CU	PVC	208	-	-	-	13,923	2	DISCONNECT	10,282	65,000	
2	DISCONNECT	10,282	1	000	5	CU	STEEL	208	-	-	-	12,843	3	METER	9,950	10,000	
3	METER	9,950	1	000	5	CU	STEEL	208	-	-	-	12,843	4	PANEL "B"	9,639	10,000	
4	PANEL "B"	9,639	1	0	216	CU	PVC	208	-	-	-	9,317	5	P-1	3,369	5,000	

Wire Size: "0"=1/0AWG, "00" = 2/0 AWG, "000" = 3/0 AWG, "0000" = 4/0 AWG

SUPPLIED FROM: UTILITY TRANSFORMER

PANEL "B" (NEW) — FLUSH — SURFACE X — M.C.B. 200/3 A — BUS 200 A CU — VOLTAGE 120 / 208 V 3 Φ 4 W — MLO — NEMA 3R — A.I.C. 10 K — MANF. TBD — C.B. BOLT ON

TYPE	DESCRIPTION	BKR	CIR	LOAD (VOLT AMPS) / PHASE A		B		C		CIR	BKR	DESCRIPTION	TYPE
G	CONTROLLER	20	1	1200	10808					2	125	P-1	M
R	GFCI REC	20	3			360	10808			4	/	-	M
	SPARE	20	5					0	10808	6	3P	-	M
	SPARE	20	7	0	0					8	-	BLANK	
	SPARE	20	9			0	0			10	-	BLANK	
	SPARE	20	11					0	0	12	-	BLANK	
	BLANK	-	13	0	0					14	-	BLANK	
	BLANK	-	15			0	0			16	-	BLANK	
	BLANK	-	17					0	0	18	-	BLANK	
	BLANK	-	19	0	0					20	-	BLANK	
	BLANK	-	21			0	0			22	-	BLANK	
	BLANK	-	23					0	0	24	-	BLANK	
				12008		11168		10808					

LOAD TYPE	CONNECTED KVA A	B	C	TOTAL ALL PHASES	FACTOR	DEMAND KVA A	B	C	TOTAL ALL PHASES
LIGHTING / EV CHARGERS	0.0	0.0	0.0	0.0	125%	0.0	0.0	0.0	0
RECEPTACLE (10KVA OR LESS)	0.0	0.4	0.0	0.4	100%	0.0	0.4	0.0	0
RECEPTACLE (OVER 10KVA)	0.0	0.0	0.0	0.0	50%	0.0	0.0	0.0	0
HVAC/MOTOR	0.0	0.0	0.0	0.0	100%	0.0	0.0	0.0	0
MOTOR (LARGEST)	10.8	10.8	10.8	32.4	125%	13.5	13.5	13.5	41
KITCHEN EQUIPMENT	0.0	0.0	0.0	0.0	100%	0.0	0.0	0.0	0
MISCELLANEOUS	1.2	0.0	0.0	1.2	100%	1.2	0.0	0.0	1
TOTAL KVA	12.0	11.2	10.8	34.0	TOTAL KVA	14.7	13.9	13.5	42
					TOTAL AMPS	122.6	115.6	112.6	117

WITH GROUND BUS

LEGEND: L = LTG / EV R = RECEPTACLE M = HVAC / MOTOR K = KITCHEN G = MISCELLANEOUS
MAX PERCENT DIFFERENCE BETWEEN PHASES (A,B,C): 10%

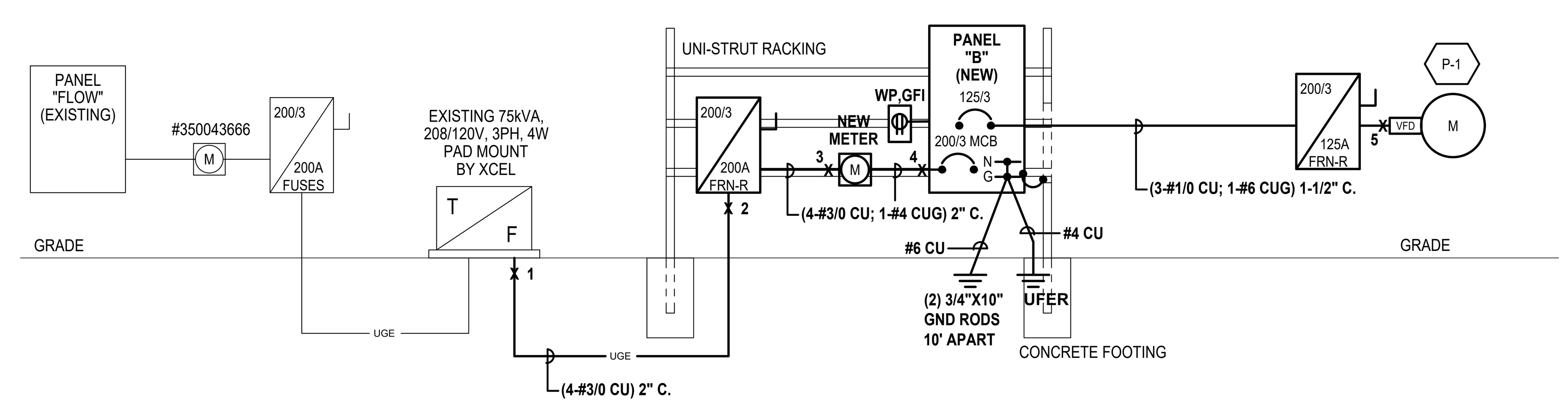

NEW/EXISTING ONE-LINE DIAGRAM

SCALE: NONE

GENERAL NOTES:

A. NEW AND RELOCATED ITEMS SHOWN AS BOLD
EXISTING ITEMS SHOWN AS LIGHT

PUMP SCHEDULE

TAG	AREA SERVED	VOLT	PH	FLA	MCA	FAN HP	FAN W	SCCR RATING	CONDUCTORS	CONDUIT	DISCONNECT AT UNIT SWITCH	DISCONNECT AT UNIT FUSES	SWITCHGEAR OR PANEL BREAKER	SWITCHGEAR OR PANEL FUSE SIZE/TYPE	CONTROLS TYPE	CONTROLS SIZE	OCPD TYPE	OCPD SIZE	NOTES
P-1	PARK	208	3	90.0	112.5	-	-	65k	3-#1 CU; 1-#6 G	1-1/2"	200/3	125A FRN-R	125/3	-	VFD	150A			1,2

NOTES;
1) COORDINATE MOUNTING LOCATION WITH MECHANICAL PLANS AND CONTRACTOR PRIOR TO ROUGH IN.
2) UNIT PROVIDED WITH FACTORY MOUNTED VFD FOR PUMP.

Primera
COLORADO: Denver Office:
7822 South Whelling Ct, Ste B,
Englewood, CO 80112
303-696-1257

NEC: 2023 IECC: NA

No.	Description	Date
	ISSUE FOR CD 90%	05.23.25
	ISSUE FOR PERMIT	03.06.26

STAMP:

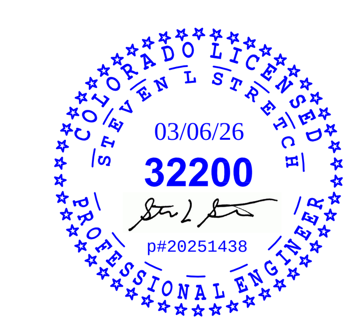

CLIENT:
CITY OF THORNTON
9500 CIVIC CENTER DR, THORNTON, CO, 80229

PROJECT NAME:
CHERRY PARK IRRIGATION REHAB PROJECT 22-46B

DRAWING TITLE
GENERAL NOTES AND SYMBOLS LEGEND

PROJECT NO. 20241438.00 — DATE 3/06/2026 — CLIENT NUMBER .
APPROVED X — DRAWING NUMBER
CHECKED SLS
DRAWN BY TE

E0.0

SEAL

© 2022 Primera

PLOT STYLE TABLE – CTB: Corey Engineering.ctb
PLOT DEVICE DRIVER: XEROX-D.pc3
FILENAME/LOCATION: P:\2024\20241438.00\20251438 E0 COVER SHEET.DWG
PRINTED BY: THOM EVERT
DATE PRINTED: 3/5/2026 8:38 AM
FILE SAVED: 3/3/2026 5:10 PM
P:\2024\20241438.00\20251438 E0 COVER SHEET.dwg, 3/5/2026 8:38:19 AM, DWG To PDF.pc3

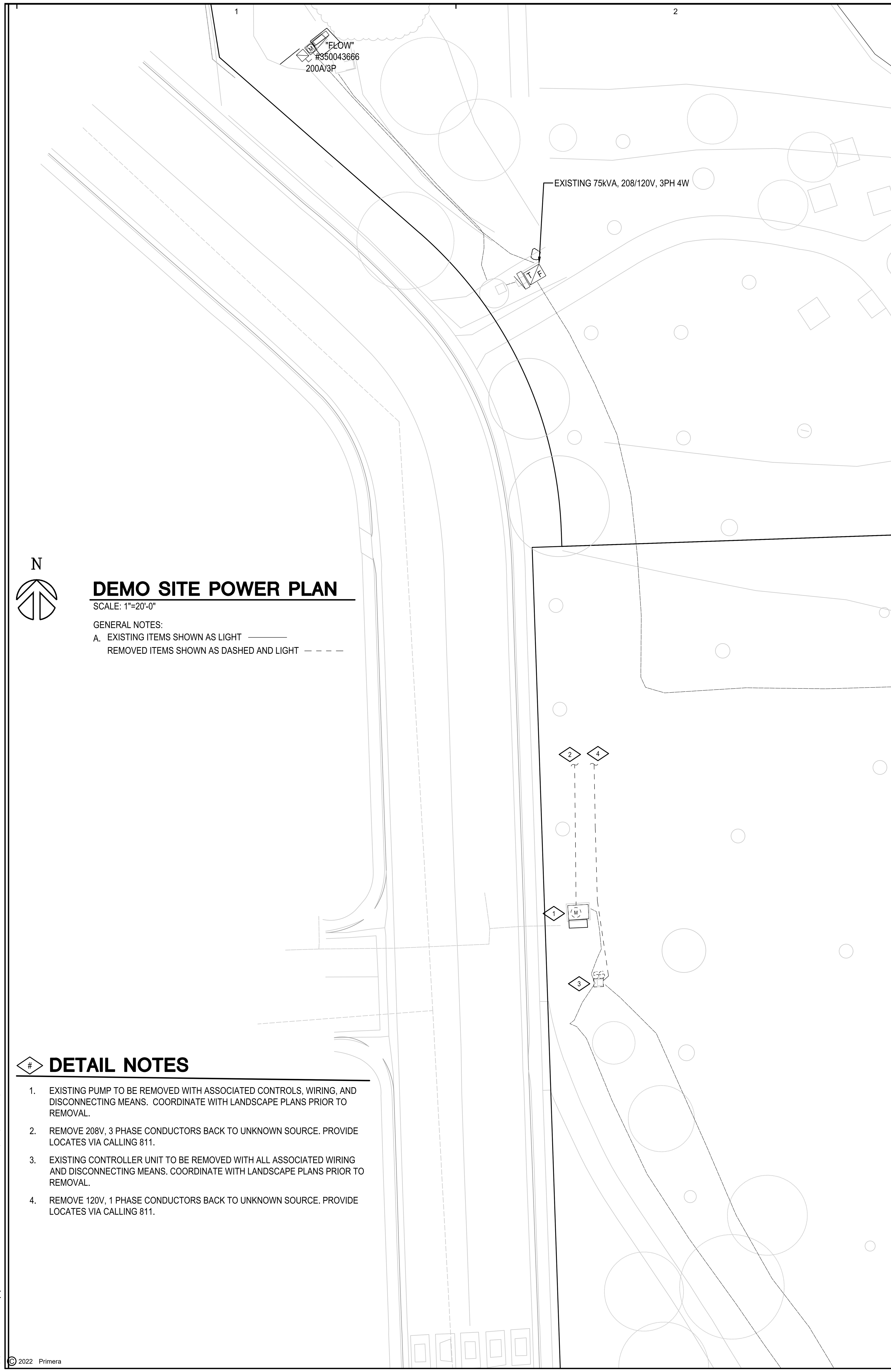

DEMO SITE POWER PLAN

SCALE: 1"=20'-0"

GENERAL NOTES:

A. EXISTING ITEMS SHOWN AS LIGHT
REMOVED ITEMS SHOWN AS DASHED AND LIGHT

DETAIL NOTES

1. EXISTING PUMP TO BE REMOVED WITH ASSOCIATED CONTROLS, WIRING, AND DISCONNECTING MEANS. COORDINATE WITH LANDSCAPE PLANS PRIOR TO REMOVAL.
2. REMOVE 208V, 3 PHASE CONDUCTORS BACK TO UNKNOWN SOURCE. PROVIDE LOCATES VIA CALLING 811.
3. EXISTING CONTROLLER UNIT TO BE REMOVED WITH ALL ASSOCIATED WIRING AND DISCONNECTING MEANS. COORDINATE WITH LANDSCAPE PLANS PRIOR TO REMOVAL.
4. REMOVE 120V, 1 PHASE CONDUCTORS BACK TO UNKNOWN SOURCE. PROVIDE LOCATES VIA CALLING 811.

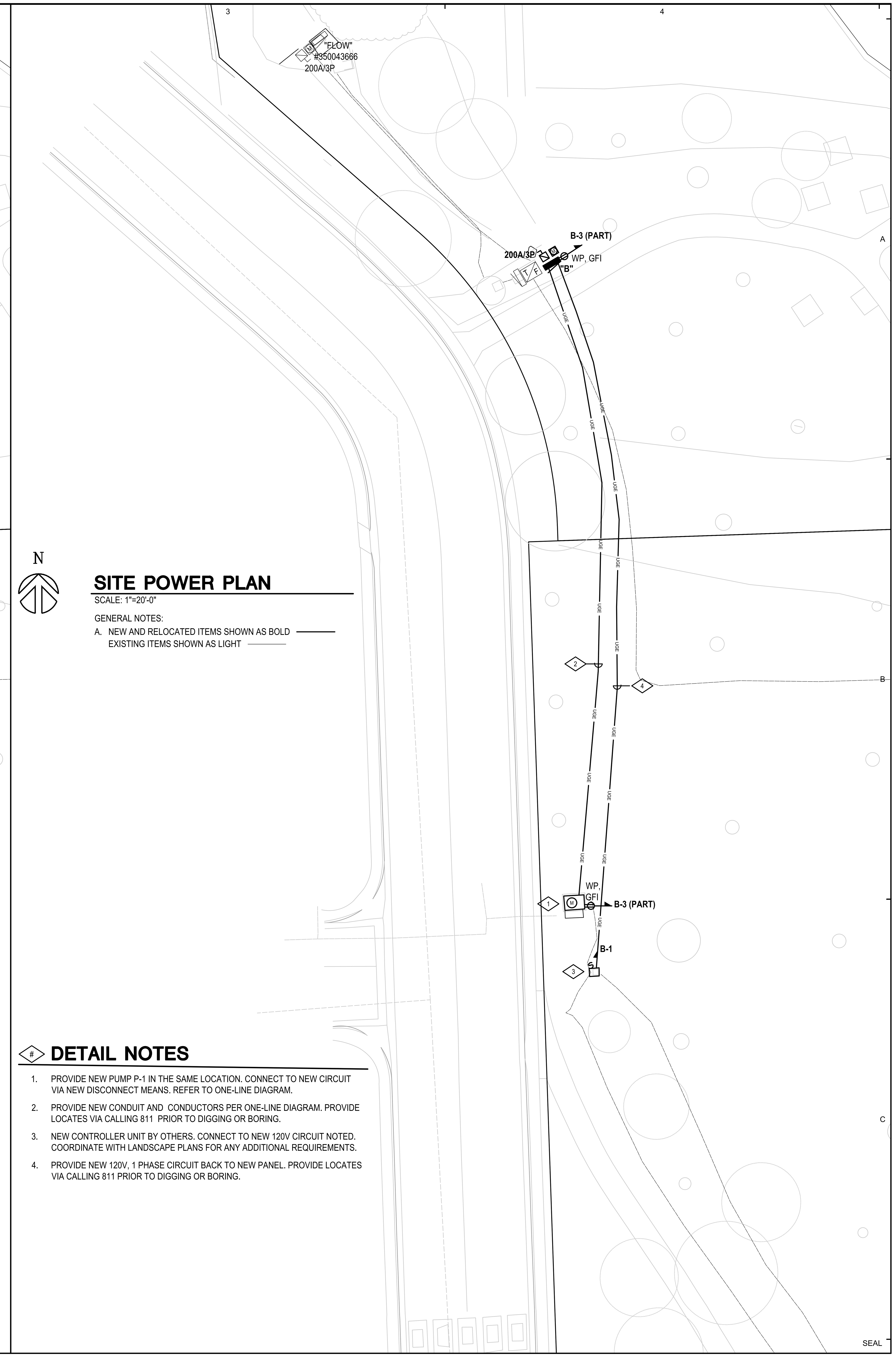

SITE POWER PLAN

SCALE: 1"=20'-0"

GENERAL NOTES:

A. NEW AND RELOCATED ITEMS SHOWN AS BOLD
EXISTING ITEMS SHOWN AS LIGHT

DETAIL NOTES

1. PROVIDE NEW PUMP P-1 IN THE SAME LOCATION. CONNECT TO NEW CIRCUIT VIA NEW DISCONNECT MEANS. REFER TO ONE-LINE DIAGRAM.
2. PROVIDE NEW CONDUIT AND CONDUCTORS PER ONE-LINE DIAGRAM. PROVIDE LOCATES VIA CALLING 811 PRIOR TO DIGGING OR BORING.
3. NEW CONTROLLER UNIT BY OTHERS. CONNECT TO NEW 120V CIRCUIT NOTED. COORDINATE WITH LANDSCAPE PLANS FOR ANY ADDITIONAL REQUIREMENTS.
4. PROVIDE NEW 120V, 1 PHASE CIRCUIT BACK TO NEW PANEL. PROVIDE LOCATES VIA CALLING 811 PRIOR TO DIGGING OR BORING.

SEAL

Primera
COLORADO: Denver Office:
7822 South Wheeling Ct, Ste B,
Englewood, CO 80112
303-696-1257
NEC: 2023 IECC: NA

No.	Description	Date
	ISSUE FOR CD 90%	05.23.25
	ISSUE FOR PERMIT	03.06.26

STAMP: COLORADO LICENSED PROFESSIONAL ENGINEER STEVEN L. STRETCH 32200 03/06/26 p#20251438

CLIENT:
CITY OF THORNTON
9500 CIVIC CENTER DR, THORNTON, CO, 80229

PROJECT NAME:
CHERRY PARK IRRIGATION REHAB PROJECT 22-46B

DRAWING TITLE
SITE POWER PLAN

PROJECT NO.	DATE	CLIENT NUMBER
20241438.00	3/06/2026	.

APPROVED: X
CHECKED: SLS
DRAWN BY: TE
DRAWING NUMBER: E1.0

© 2022 Primera

P:\2024\20241438.00\20251438 E1 Power Plan.dwg, 3/5/2026 8:38:25 AM, DWG To PDF.pc3