THORNTON WATER PROJECT

THORNTON WATER PROJECT
CHEMICAL BUILDING AND PRV VAULTS PROJECT

PROJECT #12-777XP

BID SET

MAY 2026

VOLUME 1 OF 2

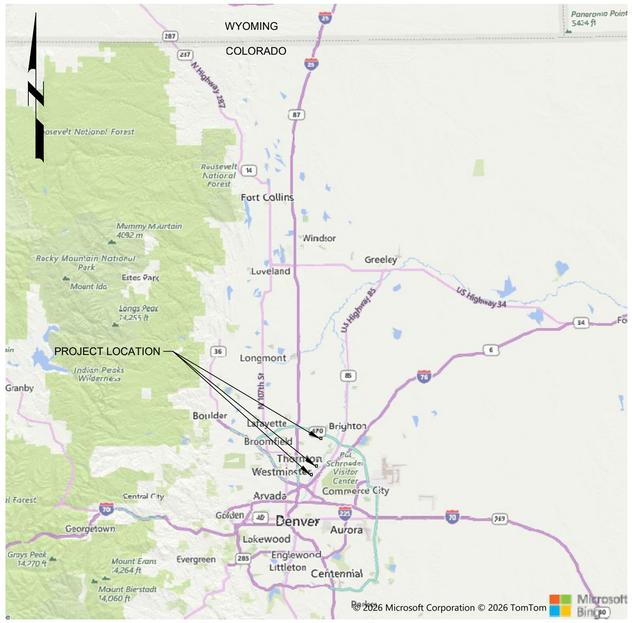

VICINITY MAP
NOT TO SCALE

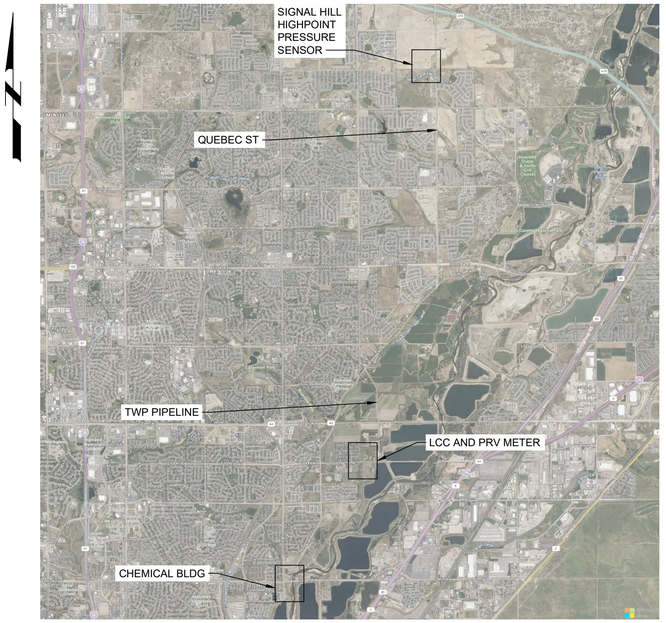

LOCATION MAP
NOT TO SCALE

JASON PIERCE, P.E. - PROJECT DIRECTOR DATE

JOHN HIMYAK, P.E - PROJECT ENGINEER DATE

MICHAEL WELKER, P.E. - PROJECT MANAGER DATE

TONY STOUT, P.E. - OWNER'S ADVISOR DATE

COLORADO LICENSED
BART LEE MILES
43662
PROFESSIONAL ENGINEER

carollo®

JOB NO. 204403
DRAWING NO. 00G01
SHEET NO. 1 OF 168

LAST SAVED BY: AEvans

PROJECT NO. 11599A10 FILE NAME: 204403_00G01.dwg

SHEET NO.	DRAWING NO.			DESCRIPTION
1	00	G	01	COVER SHEET
2	00	G	02	DRAWING INDEX
3	00	G	03	OVERALL SITE PLANS
4	00	G	04	GENERAL NOTES AND SYMBOLS
5	00	G	05	GENERAL ABBREVIATIONS
6	00	G	06	PIPE SCHEDULE
7	00	G	07	DESIGN CRITERIA
8	00	GC	01	CIVIL GENERAL NOTES AND LEGEND
9	00	GC	02	CIVIL NOTES AND ABBREVIATIONS
10	00	GC	03	SIGNAL HILL SURVEY CONTROL PLAN
11	00	GC	04	LCC PRV SURVEY CONTROL PLAN
12	00	GC	05	CHEMICAL BUILDING SURVEY CONTROL PLAN
13	00	GS	01	STRUCTURAL GENERAL NOTES
14	00	GM	01	MECHANICAL GENERAL LEGEND AND SYMBOLS
15	00	GH	01	HVAC NOTES, ABBREVIATIONS, AND SYMBOLS
16	00	GH	02	HVAC SCHEDULES
17	00	GH	03	HVAC CONTROLS SCHEMATICS AND POINTS LISTS 1
18	00	GP	01	PLUMBING NOTES, ABBREVIATIONS, SYMBOLS, AND SCHEDULES
19	00	GE	01	ELECTRICAL LEGEND
20	00	GE	02	ELECTRICAL ABBREVIATIONS
21	00	GN	01	GENERAL SYMBOLS & ABBREVIATIONS 1
22	00	GN	02	GENERAL SYMBOLS & ABBREVIATIONS 2
23	00	GN	03	GENERAL SYMBOLS & ABBREVIATIONS 3
24	00	GN	04	GENERAL SYMBOLS & ABBREVIATIONS 4
25	00	GN	05	GENERALSCHEMATIC SYMBOLS
26	00	GN	06	GENERALSAMPLE LOOP DRAWING
				CATHODIC PROTECTION
27	00	CP	01	GENERAL NOTES AND TEST STATION SCHEDULE
28	00	CP	02	STANDARD DETAILS
				ELECTRICAL SCHEDULES
29	00	E	01	ELECTRICAL SCHEDULES
				AREA 20 - SIGNAL HILL INSTRUMENT
				CIVIL
30	20	C	01	SIGNAL HILL INSTRUMENT - SITE CIVIL PLAN
				EROSION CONTROL
31	20	EC	01	SIGNAL HILL INSTRUMENT - EROSION CONTROL NOTES, LEGEND, AND ACCESS MAP
32	20	EC	02	SIGNAL HILL INSTRUMENT - EROSION CONTROL PLAN INITIAL
33	20	EC	03	SIGNAL HILL INSTRUMENT - EROSION CONTROL PLAN FINAL
				ELECTRICAL
34	20	E	01	SIGNAL HILL INSTRUMENT - ELECTRICAL SITE PLAN
35	20	E	02	SIGNAL HILL INSTRUMENT - ELECTRICAL SITE PLAN DETAIL
				INSTRUMENTATION
36	20	N	01	SIGNAL HILL INSTRUMENT - NETWORKS NETWORK BLOCK DIAGRAM
37	20	N	02	SIGNAL HILL INSTRUMENT - PANELS PCM PANEL EXTERNAL ELEVATION
38	20	N	03	SIGNAL HILL INSTRUMENT - PANELS PCM PANEL INTERNAL ELEVATION
39	20	N	04	SIGNAL HILL INSTRUMENT - SCHEMATICS PCM-SH PANEL POWER WIRING
40	20	N	05	SIGNAL HILL INSTRUMENT - LEVEL SWITCH AND CONTROL RELAY WIRING DIAGRAM
41	20	N	06	SIGNAL HILL INSTRUMENT - P&ID INSTRUMENT VAULT
42	20	N	07	SIGNAL HILL INSTRUMENT - P&ID PCM-SH CABINET
43	20	N	08	SIGNAL HILL INSTRUMENT - PRESSURE TRANSMITTERS PANEL ELEVATIONS

SHEET NO.	DRAWING NO.			DESCRIPTION
				AREA 30 - LCC PRV
				CIVIL
44	30	C	01	LCC PRV - CIVIL SITE AND YARD PIPING DEMOLITION PLAN
45	30	C	02	LCC PRV - GRADING, PAVING, AND DRAINAGE PLAN
46	30	C	03	LCC PRV - YARD PIPING PLAN AND PROFILE
47	30	C	04	LCC PRV - PRV VAULT DETAILS
48	30	C	05	LCC PRV - CIVIL DETAILS
				EROSION CONTROL
49	30	EC	01	LCC PRV - EROSION CONTROL NOTES, LEGEND, AND ACCESS MAP
50	30	EC	02	LCC PRV - EROSION CONTROL PLAN INITIAL
51	30	EC	03	LCC PRV - EROSION CONTROL PLAN FINAL
				STRUCTURAL
52	30	S	01	LCC PRV - VAULT - FOUNDATION AND UPPER PLAN
53	30	S	02	LCC PRV - VAULT - SECTIONS
				ELECTRICAL
54	30	E	01	LCC PRV - ELECTRICAL SITE PLAN
55	30	E	02	LCC PRV - ELECTRICAL SITE PLAN DETAIL
56	30	E	03	LCC PRV - PANELBOARD SCHEDULE
				INSTRUMENTATION
57	30	N	01	LCC PRV - NETWORKS NETWORK BLOCK DIAGRAM
58	30	N	02	LCC PRV - PANELS PCM PANEL EXTERNAL ELEVATION
59	30	N	03	LCC PRV - PANELS PCM PANEL INTERNAL ELEVATION
60	30	N	04	LCC PRV - PCM PANEL POWER WIRING SCHEMATIC
61	30	N	05	LCC PRV - LEVEL SWITCH AND CONTROL RELAY WIRING DIAGRAM
62	30	N	06	LCC PRV - PRESSURE TRANSMITTERS PANEL ELEVATIONS
63	30	N	07	LCC PRV - P&ID PRV VAULT
				AREA 50 - CHEMICAL BUILDING AND PRV AND METER VAULT
				CIVIL
64	50	C	01	CHEMICAL BUILDING - GRADING, PAVING, AND DRAINAGE DEMOLITION PLAN 1
65	50	C	02	CHEMICAL BUILDING - GRADING, PAVING, AND DRAINAGE DEMOLITION PLAN 2
66	50	C	03	CHEMICAL BUILDING - GRADING, PAVING, AND DRAINAGE PLAN 1
67	50	C	04	CHEMICAL BUILDING - GRADING, PAVING, AND DRAINAGE PLAN 2
68	50	C	05	CHEMICAL BUILDING - YARD PIPING DEMOLITION PLAN 1
69	50	C	06	CHEMICAL BUILDING - YARD PIPING DEMOLITION PLAN 2
70	50	C	07	CHEMICAL BUILDING - YARD PIPING PLAN 1
71	50	C	08	CHEMICAL BUILDING - YARD PIPING PLAN 2
72	50	C	09	CHEMICAL BUILDING - PRV VAULT DETAILS
				EROSION CONTROL
73	50	EC	01	CHEMICAL BUILDING - EROSION CONTROL NOTES, LEGEND, AND ACCESS MAP
74	50	EC	02	CHEMICAL BUILDING - EROSION CONTROL PLAN INITIAL
75	50	EC	03	CHEMICAL BUILDING - EROSION CONTROL PLAN FINAL
				ARCHITECTURAL
76	50	A	01	CHEMICAL BUILDING - BUILDING CODE ANALYSIS
77	50	A	02	CHEMICAL BUILDING - UPPER PLAN
78	50	A	03	CHEMICAL BUILDING - ROOF PLAN
79	50	A	04	CHEMICAL BUILDING - BUILDING SECTIONS
80	50	A	05	CHEMICAL BUILDING - BUILDING ELEVATIONS
81	50	A	06	CHEMICAL BUILDING - WALL SECTIONS AND DETAILS
82	50	A	07	CHEMICAL BUILDING - DETAILS, DOOR SCHEDULE, AND ELEVATIONS
				STRUCTURAL
83	50	S	01	CHEMICAL BUILDING - FOUNDATION PLAN
84	50	S	02	CHEMICAL BUILDING - FLOOR PLAN
85	50	S	03	CHEMICAL BUILDING - ROOF FRAMING PLAN
86	50	S	04	CHEMICAL BUILDING - ROOF LOADING PLANS
87	50	S	05	CHEMICAL BUILDING - SECTIONS 1
88	50	S	06	CHEMICAL BUILDING - SECTIONS 2
89	50	S	07	CHEMICAL BUILDING - GENERATOR PAD PLAN AND DETAILS

SHEET NO.	DRAWING NO.			DESCRIPTION
				MECHANICAL
90	50	M	01	CHEMICAL BUILDING - PLAN
91	50	M	02	CHEMICAL BUILDING - SECTIONS 1
92	50	M	03	CHEMICAL BUILDING - SECTIONS 2
93	50	M	04	CHEMICAL BUILDING - SECTIONS 3
				HVAC
94	50	H	01	CHEMICAL BUILDING - FLOOR PLAN
95	50	H	02	CHEMICAL BUILDING - ROOF PLAN
96	50	H	03	CHEMICAL BUILDING - AIRFLOW SCHEMATIC
				PLUMBING
97	50	P	01	CHEMICAL BUILDING - WATER SUPPLY PLAN
98	50	P	02	CHEMICAL BUILDING - ISOMETRIC
99	50	P	03	CHEMICAL BUILDING - FIRE PROTECTION PLAN
				ELECTRICAL
100	50	E	01	CHEMICAL BUILDING AND PRV VAULT OVERALL ELECTRICAL SITE PLAN
101	50	E	02	CHEMICAL BUILDING AND PRV VAULT PANELBOARD SCHEDULES AND ONE-LINE DIAGRAM
102	50	E	03	CHEMICAL BUILDING AND PRV VAULT DUCT BANK SECTIONS
103	50	E	04	CHEMICAL BUILDING LOWER FLOOR POWER AND CONTROL PLAN
104	50	E	05	CHEMICAL BUILDING LOWER FLOOR ENLARGED POWER AND CONTROL PLAN
105	50	E	06	CHEMICAL BUILDING LOWER FLOOR LIGHTING, RECEPTACLE AND GROUNDING PLAN
106	50	E	07	CHEMICAL BUILDING SECURITY SYSTEMS AND FIRE ALARM PLAN
107	50	E	08	CHEMICAL BUILDING ROOF PLAN
108	50	E	09	PRV VAULT DETAIL PLAN
				INSTRUMENTATION
109	02	N	01	CHEMICAL BUILDING – EXTERNAL PANEL ELEVATION
110	02	N	02	CHEMICAL BUILDING – PCM-SPE INTERNAL PANEL ELEVATION
111	04	N	50	CHEMICAL BUILDING – PCM NETWORK CONNECTION DIAGRAM
112	06	N	01	CHEMICAL BUILDING – PCM PANEL POWER WIRING SCHEMATIC
113	06	N	02	CHEMICAL BUILDING – CONTROL SCHEMATICS 1
114	06	N	03	CHEMICAL BUILDING – CONTROL SCHEMATIC
115	50	N	01	CHEMICAL BUILDING – SODIUM PERMANGANATE STORAGE P&ID
116	50	N	02	CHEMICAL BUILDING – UTILITY WATER FEED P&ID
117	50	N	03	CHEMICAL BUILDING – SODIUM PERMANGANATE FEED P&ID 1
118	50	N	04	CHEMICAL BUILDING – SODIUM PERMANGANATE FEED P&ID 2
119	50	N	05	CHEMICAL BUILDING – SODIUM PERMANGANATE FEED P&ID 3
120	50	N	06	CHEMICAL BUILDING – CHEMICAL BUILDING PCM CABINET P&ID
121	50	N	07	CHEMICAL BUILDING – PRV VAULT AND CHEMICAL INJECTION MANHOLE P&ID
122	50	N	08	CHEMICAL BUILDING – PRV VAULT AND ANALYZERS CHEMICAL INJECTION P&ID
123	50	N	09	CHEMICAL BUILDING – GENERATOR AND ATS P&ID
				AREA 55 - WEST GRAVEL LAKES PUMP STATION
				MECHANICAL
124	55	M	01	WEST GRAVEL LAKES PUMP STATION - PLAN
125	55	M	02	WEST GRAVEL LAKES PUMP STATION - DETAILS 1
126	55	M	03	WEST GRAVEL LAKES PUMP STATION - DETAILS 2
				ELECTRICAL
127	55	E	01	WEST GRAVEL LAKES PUMP STATION ELECTRICAL SITE PLAN
128	55	E	02	WEST GRAVEL LAKES PUMP STATION ELECTRICAL PLAN
				INSTRUMENTATION
129	55	N	01	WEST GRAVEL LAKES SODIUM PERMANGANATE P&ID

SHEET NO.	DRAWING NO.			DESCRIPTION
				TYPICAL DETAILS
130	00	TC	01	TYPICAL DETAILS - CIVIL 1
131	00	TC	02	TYPICAL DETAILS - CIVIL 2
132	00	TC	03	TYPICAL DETAILS - CIVIL 3
133	00	TC	04	TYPICAL DETAILS - CIVIL 4
134	00	TS	01	TYPICAL DETAILS - STRUCTURAL 1
135	00	TS	02	TYPICAL DETAILS - STRUCTURAL 2
136	00	TS	03	TYPICAL DETAILS - STRUCTURAL 3
137	00	TS	04	TYPICAL DETAILS - STRUCTURAL 4
138	00	TS	05	TYPICAL DETAILS - STRUCTURAL 5
139	00	TS	06	TYPICAL DETAILS - STRUCTURAL 6
140	00	TS	07	TYPICAL DETAILS - STRUCTURAL 7
141	00	TS	08	TYPICAL DETAILS - STRUCTURAL 8
142	00	TS	09	TYPICAL DETAILS - STRUCTURAL 9
143	00	TS	10	TYPICAL DETAILS - STRUCTURAL 10
144	00	TS	11	TYPICAL DETAILS - STRUCTURAL 11
145	00	TM	01	TYPICAL DETAILS - MECHANICAL 1
146	00	TM	02	TYPICAL DETAILS - MECHANICAL 2
147	00	TM	03	TYPICAL DETAILS - MECHANICAL 3
148	00	TH	01	TYPICAL DETAILS - HVAC 1
149	00	TH	02	TYPICAL DETAILS - HVAC 2
150	00	TH	03	TYPICAL DETAILS - HVAC 3
151	00	TE	01	TYPICAL DETAILS - ELECTRICAL 1
152	00	TE	02	TYPICAL DETAILS - ELECTRICAL 2
153	00	TE	03	TYPICAL DETAILS - ELECTRICAL 3
154	00	TE	04	TYPICAL DETAILS - ELECTRICAL 4
155	00	TE	05	TYPICAL DETAILS - ELECTRICAL 5
156	00	TE	06	TYPICAL DETAILS - ELECTRICAL 6
157	00	TE	07	TYPICAL DETAILS - ELECTRICAL 7
158	00	TE	08	TYPICAL DETAILS - ELECTRICAL 8
159	00	TE	09	TYPICAL DETAILS - ELECTRICAL 9
160	00	TN	01	TYPICAL DETAILS - INSTRUMENTATION 1
161	00	TN	02	TYPICAL DETAILS - INSTRUMENTATION 2
162	00	TN	03	TYPICAL DETAILS - INSTRUMENTATION 3
163	00	TN	04	TYPICAL DETAILS - INSTRUMENTATION 4
164	00	TN	05	TYPICAL DETAILS - INSTRUMENTATION 5
165	00	TN	06	TYPICAL DETAILS - INSTRUMENTATION 6
166	00	TN	07	TYPICAL DETAILS - INSTRUMENTATION 7
167	00	TN	08	TYPICAL DETAILS - INSTRUMENTATION 8
168	00	TN	09	TYPICAL DETAILS - INSTRUMENTATION 9

REV	DATE	BY	DESCRIPTION
			BID SET

DESIGNED BLG
DRAWN ARE
CHECKED JJK
DATE MAY 2026

COLORADO LICENSED
43662
MATT LEE GARY
Digitally signed by Matt L. Gary
Date/Time: 2026.05.06 18:02:48 -06'00'
PROFESSIONAL ENGINEER

carollo

THORNTON WATER PROJECT

CITY OF THORNTON - THORNTON WATER PROJECT
CHEMICAL BUILDING AND PRV VAULTS
GENERAL
DRAWING INDEX

VERIFY SCALES
BAR IS ONE INCH ON ORIGINAL DRAWING
0 1"
IF NOT ONE INCH ON THIS SHEET, ADJUST SCALES ACCORDINGLY

JOB NO. 204403
DRAWING NO. 00G02
SHEET NO. 2 OF 168

LAST SAVED BY: AEvans

PROJECT NO.:204403-100000 FILE NAME: 204403_00G02.dwg

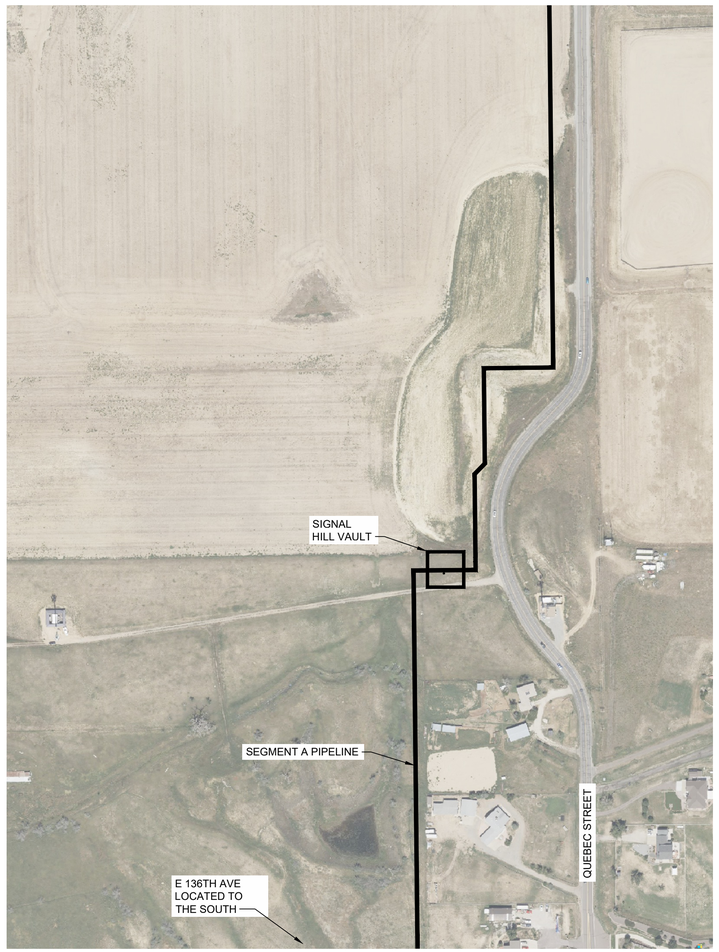

AREA 20
SIGNAL HILL HIGHPOINT PRESSURE SENSOR
OVERALL SITE PLAN
NOT TO SCALE

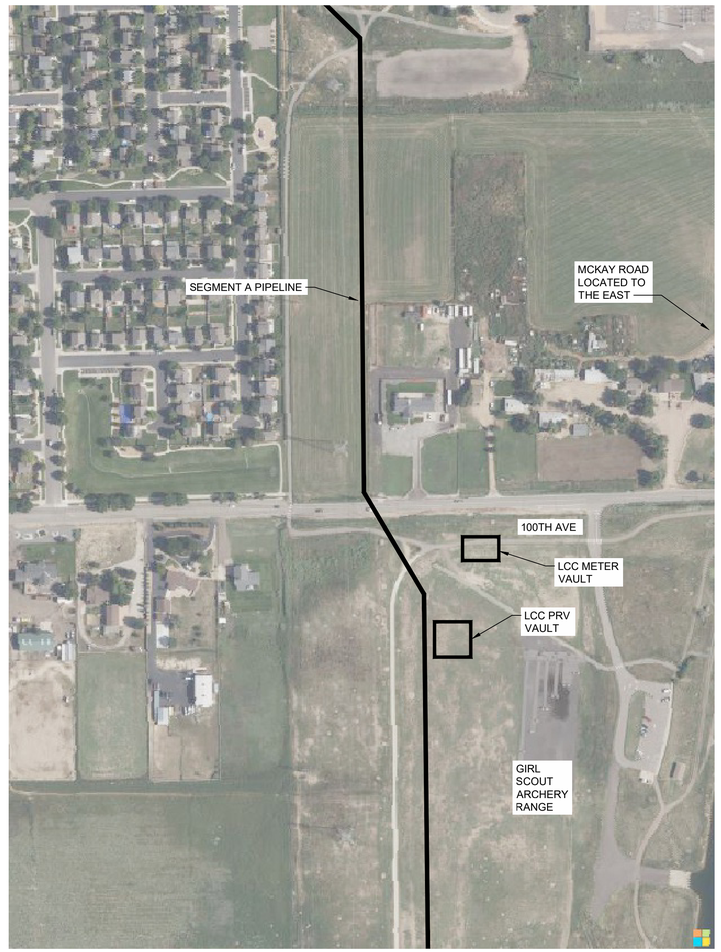

AREA 30
LCC PRV AND METER VAULTS
OVERALL SITE PLAN
NOT TO SCALE

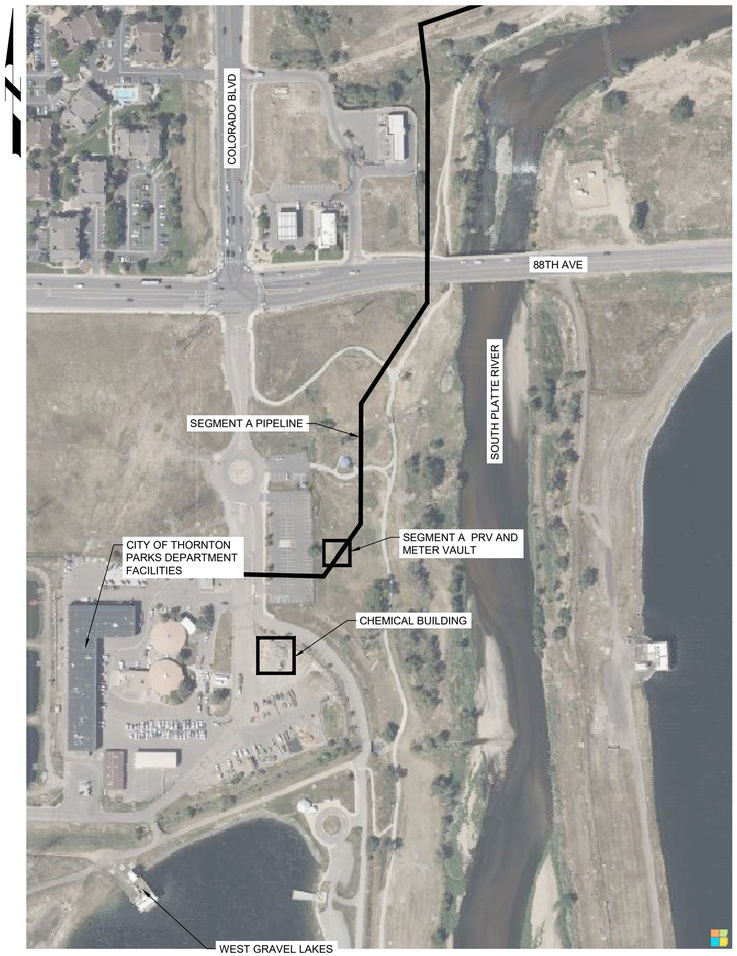

AREA 50
CHEMICAL BUILDING
OVERALL SITE PLAN
NOT TO SCALE

REV	DATE	BY	DESCRIPTION
			BID SET

DESIGNED BLG
DRAWN ARE
CHECKED JJK
DATE MAY 2026

COLORADO LICENSED
BART LEE GILES
43662
Digitally signed by Bart L. Giles
Date: 2026.05.06 18:03:34 -06'00'
PROFESSIONAL ENGINEER

carollo

THORNTON WATER PROJECT

CITY OF THORNTON - THORNTON WATER PROJECT
CHEMICAL BUILDING AND PRV VAULTS
GENERAL
OVERALL SITE PLANS

VERIFY SCALES
BAR IS ONE INCH ON ORIGINAL DRAWING
0 1"
IF NOT ONE INCH ON THIS SHEET, ADJUST SCALES ACCORDINGLY

JOB NO. 204403
DRAWING NO. 00G03
SHEET NO. 3 OF 168

LAST SAVED BY: AEvans

PROJECT NO.:204403-100000 FILE NAME: 204403_00G03.dwg

DETAIL REFERENCES

PLAN/TITLE

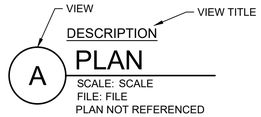

SECTION CUT

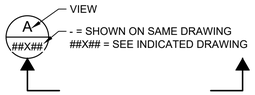

SECTION OR DETAIL TITLE W/ REFERENCE

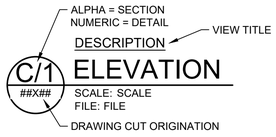

DETAIL CALL-OUT (ENLARGED)

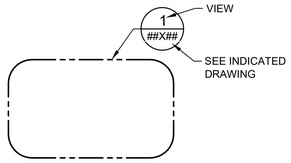

DRAWING REFERENCE

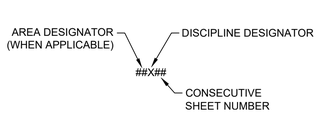

TYPICAL DETAIL REFERENCE



EXTERIOR ELEVATION VIEWS



PHOTO LOCATION



GRID BUBBLE



TYPICAL DETAIL TITLE

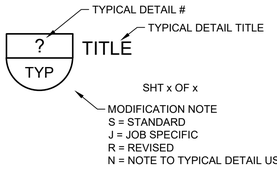

GENERAL SYMBOLS

NORTH ARROW/ PLANT NORTH

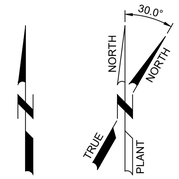

SCALE

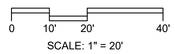

BRACKET

BREAK LINE



PIPE BREAK



PIPE END



PIPE CONTINUATION (SINGLE LINE)



KEY NOTE



REVISION DELTA



EXISTING ELEVATION

EX TOW XXXX.X±

ELEVATION

TOC XXXX.XX

EQUIPMENT/DEVICE KEY TAG



EQUIPMENT/DEVICE TAG AND NUMBER

XXX-XX-XXXX
EQUIPMENT
EX-EQUIP = EXISTING EQUIPMENT
EF-EQUIP = FUTURE EQUIPMENT

PIPE TAG

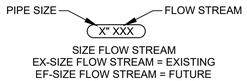

SIZE FLOW STREAM
EX-SIZE FLOW STREAM = EXISTING
EF-SIZE FLOW STREAM = FUTURE

HATCH PATTERNS

CONCRETE (ALL CLASSES)

SAND OR GROUT

DRAIN ROCK, CRUSHED ROCK, OR GRAVEL

CLSM

AGGREGATE BASE COURSE (ABC)

DEMOLITION

SPAN
GRATING

STEEL

TREAD PLATE

GENERAL NOTES

1. THE FOLLOWING NOTES APPLY TO ALL SHEETS OF THESE DRAWINGS, AS IF THEY WERE WRITTEN IN THEIR ENTIRETY ON EACH SHEET.
2. VERIFY EXISTING CONDITIONS AND DIMENSIONS BEFORE STARTING WORK. NOTIFY ENGINEER OF CONFLICTS BEFORE PROCEEDING WITH THE WORK.
3. UNLESS DETAILED, SPECIFIED, OR OTHERWISE INDICATED ON THE DRAWINGS, CONSTRUCT AS INDICATED IN THE APPLICABLE TYPICAL DETAILS AND GENERAL NOTES. TYPICAL DETAILS APPLY EVEN WHEN NOT REFERENCED AT SPECIFIC LOCATIONS ON DRAWINGS.
4. WHERE NO CONSTRUCTION DETAILS ARE SHOWN OR NOTED, DETAILS SHALL BE THE SAME AS FOR OTHER SIMILAR WORK.
5. TAKE ALL NECESSARY MEASURES TO PROTECT EXISTING FACILITIES AND UTILITIES THAT REMAIN IN PLACE, SHOWN OR NOT SHOWN ON THE DRAWINGS. EXPEDITIOUSLY REPAIR ITEMS DAMAGED BY CONTRACTOR'S OPERATIONS TO ORIGINAL OR BETTER CONDITION AT THE CONTRACTOR'S EXPENSE WITHOUT ADDITIONAL COMPENSATION.
6. MAKE CONNECTIONS TO EXISTING PIPE, EQUIPMENT, ETC. AS REQUIRED. FURNISH AND INSTALL ALL FITTINGS, ADAPTERS, SUPPORTS, AND APPURTENANCES REQUIRED TO MAKE THE CONNECTIONS FOR A RIGIDLY SUPPORTED COMPLETE AND WORKING SYSTEM.
7. VERIFY LOCATION OF ALL ARCHITECTURAL, MECHANICAL, AND ELECTRICAL ITEMS BEFORE PLACING ANY STRUCTURAL STEEL OR CONCRETE. ALSO, STRUCTURAL DIMENSIONS AND OPENINGS CONTROLLED BY ARCHITECTURAL, MECHANICAL, OR ELECTRICAL EQUIPMENT SHALL BE VERIFIED BY THE CONTRACTOR PRIOR TO CONSTRUCTION.
8. REQUIRED MECHANICAL AND ELECTRICAL EQUIPMENT SUPPORTS, ANCHORAGES, OPENINGS, RECESSES, AND REVEALS MAY NOT BE SHOWN ON THE STRUCTURAL DRAWINGS. COORDINATE REQUIREMENTS AND PROVIDE PRIOR TO CASTING CONCRETE.
9. THE CONTRACTOR IS RESPONSIBLE FOR ARRANGING ALL REQUIRED INSPECTIONS. THE PRESENCE OR ABSENCE OF THE INSPECTOR WILL NOT RELIEVE THE CONTRACTOR OF FULL RESPONSIBILITY FOR THE PROPER PERFORMANCE OF THE WORK.
10. AT COMPLETION OF THE WORK, THE CONTRACTOR IS RESPONSIBLE FOR CLEANUP AND RESTORATION OF WORK AREA TO PRE-CONSTRUCTION CONDITIONS EXCEPT AS MODIFIED BY THE WORK.

811 Know what's below. Call before you dig.

Call before you Overhead

REV	DATE	BY	DESCRIPTION
			BID SET

DESIGNED CE
DRAWN CE
CHECKED CE
DATE MAY 2026

COLORADO LICENSED — 43662 — Digitally signed by Brett L. Carollo — Date: 2026.05.06 15:09:41 -06'00' — PROFESSIONAL ENGINEER

carollo

THORNTON WATER PROJECT

CITY OF THORNTON - THORNTON WATER PROJECT
CHEMICAL BUILDING AND PRV VAULTS
GENERAL
GENERAL NOTES AND SYMBOLS

VERIFY SCALES
BAR IS ONE INCH ON ORIGINAL DRAWING
0 1"
IF NOT ONE INCH ON THIS SHEET, ADJUST SCALES ACCORDINGLY

JOB NO. 204403
DRAWING NO. 00G04
SHEET NO. 4 OF 168

Plot Date: 10/5/2022 8:20:41 AM
LAST SAVED BY: AEvans

PROJECT NO. 204403-100000 FILE NAME: 204403_00G04.dwg

@	AT (MEASUREMENT)
△	DEFLECTION ANGLE, CENTRAL ANGLE
#	NUMBER (REBAR Ø)

A

AB	ANCHOR BOLT
ABC	AGGREGATE BASE COURSE
ABS	ACRYLONITRILE BUTADIENE STYRENE
AC	ASPHALTIC CONCRETE
ACB	AIR CIRCUIT BREAKER
ACI	AMERICAN CONCRETE INSTITUTE
ACP	ASBESTOS CEMENT PIPE
ACU	AIR CONDITIONING UNIT
AD	AREA DRAIN
ADDL	ADDITIONAL
ADJ	ADJACENT, ADJUST, ADJUSTABLE
ADMIN	ADMINISTRATION
ADR	ACCESS DOOR
AED	AREA EQUIPMENT DRAIN
AER	AERAT(ION)(OR)
AFC	AFTERCOOLER
AFF	ABOVE FINISHED FLOOR
AFM	AIR FLOW MONITOR
AHU	AIR HANDLING UNIT
AIC	AIR COMPRESSOR
AIL	AIR INTAKE LOUVER
ALT	ALTERNATE
AL	ALUMINUM
ANCH	ANCHOR
ANV	ANGLE VALVE
APPROX	APPROXIMATE, APPROXIMATELY
ARCH	ARCHITECTURAL
ARV	AIR RELEASE VALVE
ASSY	ASSEMBLY
ASTM	AMERICAN SOCIETY FOR TESTING AND MATERIALS
AV	ACID VENT
AVG	AVERAGE
AVV	AIR AND VACUUM VALVE
AW	ACID WASTE

B

BC	BEGIN CURVE, BRASS CAP, BACK OF CURB, BOLT CIRCLE
BCKR	BACKER BOARD
BCM	BATCHMETER
BD	BOARD
BDD	BACKDRAFT DAMPER
BDR	BASIN DRAIN LINE
BF	BLIND FLANGE
BFG	BELOW FINISHED GRADE
BFP	BELT FILTER PRESS
BFV	BUTTERFLY VALVE
BG	BREAK GLASS HAND SWITCH
BKW	BACKWASH
BLDG	BUILDING
BLK	BLOCK
BLKHD	BULKHEAD
BLR	PROCESS BLOWER
BM	BEAM, BENCH MARK
BO	BOTTOM OF
BOTT	BOTTOM
BOTTS	BOTTOM SLUDGE
BPV	BACK PRESSURE VALVE
BRG	BEARING
BSP	BLACK STEEL PIPE
BTU	BRITISH THERMAL UNITS
BTWN	BETWEEN
BV	BALL VALVE
BWCCP	BAR-WRAPPED CONCRETE CYLINDER PIPE

C

C	CLOSE, CONDUIT CHANNEL (STRUCTURAL)
CA	CONCRETE ANCHOR
CAUSTIC	CAUSTIC SOLUTION (CONCENTRATED OR DILUTE)
CB	CATCH BASIN
CC	CENTER OF CURVATURE, CENTER TO CENTER
CCB	CHLORINE CONTACT BASIN
CD	CEILING DIFFUSER, CONDENSATE DRAIN
CDL	CHEMICAL DRAIN LINE
CDT	CONDUIT
CEF	CEILING EXHAUST FAN
CF	CUBIC FEET
CFM	CUBIC FEET PER MINUTE
CFS	CUBIC FEET PER SECOND
CHEMD	CHEMICAL DRAIN
CHF	CHEMICAL FEEDER
CHKD PL	CHECKERED PLATE
CI	CAST IRON
CIP	CAST IRON PIPE
CIRC	CIRCUMFERENTIAL/CIRCUMFERENCE
CJ	CONSTRUCTION JOINT
CKA	CHECK VALVE, ANGLE
CKB	CHECK VALVE, BALL
CKF	CHECK VALVE, FLAP
CKS	CHECK VALVE, SWING
CL	CENTER LINE
CLK	CHAIN LINK
CLD	CHLORINE LEAK DETECTOR
CLL	CHLORINE LIQUID
CLP	CHLORINE GAS (PRESSURE)
CLR	CLEAR
CLS	CHLORINE SOLUTION
CLSM	CONTROLLED LOW STRENGTH MATERIAL
CLV	CHLORINE GAS (VACUUM)
CML	CEMENT MORTAR LINED
CMLC	CEMENT MORTAR LINED AND COATED
CMP	CORRUGATED METAL PIPE
CMU	CONCRETE MASONRY UNIT
CNV	CONVEYOR
CO	CLEANOUT
COL(S)	COLUMN(S)
CONC	CONCRETE
CONN	CONNECT, CONNECTION
CONST	CONSTRUCTION
CONT	CONTINUOUS OR CONTINUATION OR (D) (OUS)
CORR	CORRUGATE(D), CORROSION
CP	CONTROL POINT
CPLG	COUPLING
CPT	CARPET
CPVC	CHLORINATED POLYVINYL CHLORIDE
CS	CARBON STEEL, CIRCULATING SLUDGE
CSP	CHEMICAL SUMP PUMP, CORRUGATED STEEL PIPE
CT	CURRENT TRANSFORMER, CERAMIC TILE
CTJ	CONTROL JOINT
CTL	CONTROL
CTR	CENTER, CENTERED
CTSK	COUNTERSUNK
CU	CUBIC
CUP	COPPER PIPE
CV	CHECK VALVE
CW	COLD WATER
CWV	COMBINATION WASTE AND VENT
CY	CUBIC YARD

D

D	DEPTH, DIGITAL OR DISCRETE, DRAIN
D/W	DRIVEWAY
DBL	DOUBLE
DDR	DESICCANT DRYER
DEG or °	DEGREE
DEMO	DEMOLISH, DEMOLITION
DET	DETAIL
DFL	DECANT/FILTRATE
DG	DOOR GRILLE
DIA or Ø	DIAMETER
DIAG	DIAGONAL
DIF	DIFFUSER
DIG	DIGESTER
DIM	DIMENSION
DIP	DUCTILE IRON PIPE
DISCH	DISCHARGE
DIW	DEIONIZED WATER
DL	DEAD LOAD, DRAIN LINE
DLV	DOOR LOUVER
DMP	DAMPER
DMS	DIAPHRAGM SEAL
DN	DOWN
do	DITTO
DO	DOOR OPENING
DP	DEEP (OR DEPTH)
DPV	DIAPHRAGM VALVE
DR	DOOR, DRAIN
DRT	DRIP TRAP
DRV	DRAIN VALVE
DS	DIGESTED SLUDGE, DOWN SPOUT
DSW	DISTILLED WATER, DOOR SWITCH
DUC	DUST COLLECTOR
DUH	DUCT HEATER UNIT
DW	DISTILLED WATER
DWD	DEWATERING DRAIN
DWG(S)	DRAWING(S)
DWL(S)	DOWEL(S)

E

E	EAST
EA	EACH
EC	END OF CURVE
ECC RED	ECCENTRIC REDUCER
ECU	EVAPORATOR COOLING UNIT
ED	EQUIPMENT DRAIN
EF	EXHAUST FAN, EACH FACE
EFF	EFFLUENT
EG	EXHAUST GRILLE
EIFS	EXTERIOR INSULATION AND FINISH SYSTEM
EJ	EXPANSION JOINT
EJR	INJECTOR/EDUCTOR
EL	ELEVATION
ELEC	ELECTRICAL
ELL	ELBOW
EMBED	EMBEDMENT
EMH	ELECTRICAL MANHOLE
EP	EDGE OF PAVEMENT
EPS	EXPANDED POLYSTYRENE
EPV	ECCENTRIC PLUG VALVE
EQ	EQUAL
EQUIP	EQUIPMENT
ER	EXHAUST REGISTER
ES	EACH SIDE
ESEW	EMERGENCY SHOWER AND EYE WASH
ESMT	EASEMENT
ESS	EMERGENCY HAND SWITCH
ET	ELECTRICALLY HEAT TRACED
EUH	ELECTRIC UNIT HEATER
EVR	EVAPORATOR
EW	EACH WAY
EWC	ELECTRIC WATER COOLER
EWEF	EACH WAY EACH FACE
EWH	ELECTRIC WATER HEATER, EXHAUST
EX	EXISTING
EXIST	EXISTING
EXP	EXPANSION, EXPANSION TANK
EXPO	EXPOSED
EXT	EXTERIOR

F

FACT	FACTORY
FAD	FOUL AIR DUCT
FB	FLAT BAR
FBW	FILTER BACKWASH
FC	FACE OF CURB, FLEXIBLE COUPLING
FCA	FLANGE COUPLING ADAPTER
FCO	FLOOR CLEANOUT
FCU	FAN COIL UNIT
FD	FIRE DAMPER, FLOOR DRAIN, FOUND
FDC	FIRE DEPARTMENT CONNECTION
FDL	FLOOR DRAIN LINE
FDR	FEEDER
FEFF	FINAL EFFLUENT
FG	FLAP GATE
FH	FIRE HYDRANT
FILT	FILTRATE
FIN	FINISH
FIN FL	FINISHED FLOOR
FIN GR	FINISHED GRADE
FL	FLOOR, FLOW LINE
FLA	FOUL AIR
FLD	FILTER DRAIN
FLE	FILTER EFFLUENT
FLEX	FLEXIBLE
FLG	FLANGE, OR FLANGED
FLR	FILTER
FM	FORCE MAIN
FND	FOUNDATION
FO	FUEL OIL
FOB	FLAT ON BOTTOM
FOT	FLAT ON TOP
FPM	FEET PER MINUTE
FPP	FLEXIBLE PLASTIC PIPE
FRP	FIBERGLASS REINFORCED PLASTIC
FRPP	FIBERGLASS REINFORCED PLASTIC PIPE
FRS	FROTH SPRAY
FS	FAR SIDE
FSTN	FASTEN(ED)
FT or '	FOOT, FEET
FTG	FOOTING
FUP	FUEL DISPENSER
FV	FLAP VALVE
FW	FLUSHING WATER, FINISHED WATER
FX	FIRE EXTINGUISHER
FXC	FIRE EXTINGUISHER CABINET
FXE	FIRE EXTINGUISHER - ELECTRICAL

G

G	GAS, GROUND, GUTTER
GA	GAUGE or GAGE
GAL	GALLONS
GALV	GALVANIZE(D)
GAV	GRAVITY VENTILATOR
GB	GRADE BREAK
GBT	GRAVITY BELT THICKENER
GC	GROOVED COUPLING
GEL	GRAVITY EXHAUST LOUVER
GEN	GENERAL, GENERATOR
GL	GLASS
GLV	GLOBE VALVE
GM	GAS METER
GND	GROUND
GPD	GALLONS PER DAY
GPM	GALLONS PER MINUTE
GR	GRADE
GRTG	GRATING
GRV	GRAVITY VENTILATOR
GSP	GALVANIZED STEEL PIPE
GV	GATE VALVE
GYP	GYPSUM

H

H	EXPLOSION-PROOF, HIGH, HORIZONTAL
H1E	HOOK ONE END
H2E	HOOK TWO ENDS
HAS	HEADED ANCHOR STUD
HB	HOSE BIBB
HDPE	HIGH DENSITY POLYETHYLENE
HDW	HARDWARE
HDWL	HEADWALL
HEF	HOOD EXHAUST FAN
HGT	HEIGHT
HORIZ	HORIZONTAL
HP	HEAT PUMP, HORSEPOWER, HIGH PRESSURE
HPA	HIGH PRESSURE AIR
HPT	HIGH POINT
HPU	HEAT PUMP UNIT AIR
HR	HANDRAIL, HOSE REEL, HOUR
HSF	HOOD SUPPLY FAN
HSS	HOLLOW STRUCTURAL SECTION (STEEL)
HTX	HEAT EXCHANGER
HV	HOSE VALVE
HW	HOT WATER
HWL	HIGH WATER LEVEL
HWR	HOT WATER RETURN
HWS	HOT WATER SUPPLY
HxW	HEIGHT BY WIDTH
HYD	HYDRANT

I

IA	INSTRUMENT AIR
ID	INSIDE DIAMETER, INSIDE DIMENSION, IDENTIFICATION
I.F.	INSIDE FACE
IN or "	INCHES
INCL	INCLUDE, INCLUDING
INF	INFLUENT
INJ	INJECTOR
INSTR	INSTRUMENTATION
INSUL	INSULAT(E)(ED)(ING)(ION)
INT	INTERIOR
INV	INVERT
IP	IRON PIPE
ISR	INTRINSICALLY SAFE RELAY

J

JST	JOIST
JT	JOINT

K

KGV	KNIFE GATE VALVE

L

L	ANGLE (STRUCTURAL), LENGTH, LOUVER
LAB	LABORATORY
LAV	LAVATORY
LB(S)	POUND(S)
LDF	LIQUID DIESEL FUEL
LDFR	LIQUID DIESEL FUEL RETURN
LF	LINEAL FEET
LG	LONG
LH	LEFT HAND
LHR	LEFT HAND REVERSE
LHRA	LEFT HAND REVERSE ACTIVE
LHRB	LEFT HAND REVERSE BEVEL
LL	LIVE LOAD
LLH	LONG LEG HORIZONTAL
LLV	LONG LEG VERTICAL
LP	LOW PRESSURE
LPA	LOW PRESSURE AIR
LPG	LIQUIFIED PROPANE GAS
LPT	LOW POINT
LR	LONG RADIUS
LS	LAB SINK
LT	LEFT
LWL	LOW WATER LEVEL

M

M	MOTOR
MAINT	MAINTENANCE
MAN	MANUAL
MASY	MASONRY
MATL	MATERIAL
MAU	MAKE-UP AIR UNIT
MAX	MAXIMUM
MB	MACHINE BOLT
MC	MECHANICAL COUPLING
MCJ	MASONRY CONTROL JOINT
MD	MOTORIZED DAMPER
MECH	MECHANICAL
MET	METAL
MFR	MANUFACTURER
MG/L	MILLIGRAMS PER LITER
MGD	MILLION GALLONS PER DAY
MH	MANHOLE
MIN	MINIMUM
MISC	MISCELLANEOUS
MIX	MIXER
MJ	MECHANICAL JOINT
MK	MARK
ML	MIXED LIQUOR
MO	MASONRY OPENING
MOD	MODIFIED
MOIST	MOISTURE
MON	MONUMENT
MOS	MOISTURE SEPARATOR
MPM	METERING PUMP
MS	MOP SINK
MTD	MOUNTED

N

N	NORTH, NEUTRAL
NA	NOT APPLICABLE
NC	NORMALLY CLOSED
NEV	VALVE, NEEDLE
NG	NATURAL GRADE, NATURAL OR LP GAS
NIC	NOT IN CONTRACT
NO., #	NUMBER
NOM	NOMINAL
NPT	NATIONAL PIPE THREAD
NPW	NON-POTABLE WATER
NS	NEAR SIDE
NTS	NOT TO SCALE

O

O	OPEN
OBD	OPPOSED BLADE DAMPER
OC	ON CENTER
OD	OUTSIDE DIAMETER, OUTSIDE DIMENSION
OED	OPEN EQUIPMENT DRAIN
O.F.	OUTSIDE FACE
OFL	OVERFLOW
OPNG	OPENING
OPP	OPPOSITE
OPP HND	OPPOSITE HAND
OZ	OUNCE

P

P	POLE
PBL	POLYMER BLENDER
PC	POINT OF CURVATURE
PCC	PLANT CONTROL CENTER
PCCP	PRESTRESSED CONCRETE CYLINDER PIPE
PCP	PROGRESSIVE CAVITY PUMP
PD	POSITIVE DISPLACEMENT, PLANT DRAIN
PD, PLD	PULSATION DAMPENER
PDP	POSITIVE DISPLACEMENT PUMP
PE	PLAIN END
PERP	PERPENDICULAR
PG	PRESSURE GAUGE
PH	PHASE, PHYSICALLY HANDICAPPED
PI	POINT OF INTERSECTION
PIV	POST INDICATOR VALVE
PL	PLATE, PROPERTY LINE
PLAS	PLASTIC
PLCS	PLACES
PLS	POLYMER SOLUTION
PLWD	PLYWOOD
PMP	PUMP
PNL(S)	PANEL(S)
POL	POLYMER
POLY	POLYETHYLENE
POS	POSITION
POW	POTABLE WATER
PP	POWER POLE
PPMV	PARTS PER MILLION (VOLUME)
PRC	POINT OF REVERSE CURVATURE
PREFAB	PREFABRICATED
PRG	PRESSURE REGULATOR
PRI	PRIMARY
PROJ	PROJECTION
PRR	PRESSURE OR VACUUM RELIEF VALVE
PRV	PRESSURE REDUCING VALVE, PRESSURE REGULATION VALVE, PRESSURE RELIEF VALVE
PS	PUMP STATION, PIPE SUPPORT
PSF	POUNDS PER SQUARE FOOT
PSG	PRESSURE GAUGE
PSI	POUNDS PER SQUARE INCH
PSIG	POUNDS PER SQUARE INCH GAUGE
PT	POINT, POINT OF TANGENCY
PV	PLUG VALVE
PVC	POINT OF VERTICAL CURVATURE, POLYVINYL CHLORIDE
PVDF	POLYVINYLIDENE FLUORIDE
PVI	POINT OF VERTICAL INTERSECTION
PVMT	PAVEMENT
PVT	POINT OF VERTICAL TANGENCY
PLW	PLANT WATER

Q

QTY	QUANTITY

R

R	RISER
R/W or R.O.W.	RIGHT OF WAY
RAD	RADIUS, RADIAL
RAS	RETURN ACTIVATED SLUDGE
RCP	REINFORCED CONCRETE PIPE
RCCP	REINFORCED CONCRETE CYLINDER PIPE
RD	ROOF DRAIN
RDL	ROOF DRAIN LINE
RDOF	ROOF DRAIN OVERFLOW
RECIRC	RECIRCULATING
RED	REDUCER, ROOF EQUIPMENT DRAIN
REF	REFERENCE
REG	REGULATOR, REGULATING
REINF	REINFORCE(D)(ING)(MENT)
REJ	RUBBER EXPANSION JOINT
REQD	REQUIRED
RER	REACTOR
RES	RESERVOIR
REV	REVISION, REVERSE
RF	RETURN FAN
RG	RETURN GRILLE RUBBER GASKET
RH	RIGHT HAND
RHR	RIGHT HAND REVERSE
RHRA	RIGHT HAND REVERSE ACTIVE
RHRB	RIGHT HAND REVERSE BEVEL
RLS	REGISTERED LAND SURVEYOR
RM	ROOM
RO	ROUGH OPENING
ROT	ROTAMETER
RP	RADIUS POINT
RPM	REVOLUTIONS PER MINUTE
RPMP	REINFORCED PLASTIC MORTAR PIPE
RR	RETURN REGISTER
RT	RIGHT
RTF	ROTARY FEEDER
RTU	ROOF TOP UNIT
RUD	RUPTURE DISK
RW	RECLAIMED WATER, REUSE WATER
RWR	RECLAIMED WATER RETURN
RWW	RAW WASTEWATER

S

S/W	SIDEWALK
S	SOUTH, SWITCH, SLOPE
SA	SAMPLE
SC	SECONDARY CLARIFIER
SCB	SCRUBBER
SCD	SMOKE CONTROL DAMPER
SCFM	STANDARD CUBIC FEET PER MINUTE
SCH	SCHEDULE
SCO	SURFACE CLEANOUT
SCR	BAR SCREEN
SCR	SILICON CONTROL RECTIFIER
SD	SMOKE DETECTOR, SPLITTER DAMPER, STORM DRAIN
SDL	SUMP DISCHARGE DRAIN LINE
SDO	SLUDGE DRAWOFF
SE	SECONDARY EFFLUENT
SEC	SECONDARY, SECOND
SECT	SECTION
SED	SEDIMENTATION
SEP	SEPTAGE
SF	SUPPLY FAN
SFW	SOFTENED WATER
SG	SUPPLY GRILLE
SGS	STORE FRONT GLAZING SYSTEM
SHD	SHOWER DRAIN
SHDR	SOLIDS HANDLING-RECYCLE
SHR	SHOWER
SHT	SHEET
SIM	SIMILAR
SK	SKIMMINGS
SL	SLOPE, SLUDGE
SLC	SLUDGE COLLECTOR DRIVE
SLG	SLIDE GATE
SLV	SLEEVE VALVE
SMP	SAMPLER, SUMP PUMP
SN	SUPERNATANT OR SUBNATANT
SOL	SOLUTION
SP	STATIC PRESSURE, SET POINT
SPD	SUMP PUMP DRAIN
SPDT	SINGLE POLE DOUBLE THROW
SPEC(S)	SPECIFICATION(S)
SPL	SPLITTER BOX
SPR	SPARE
SPS	SAMPLE SINK
SPW	SAMPLE WATER
SQ	SQUARE
SQ FT	SQUARE FEET
SQ IN(S)	SQUARE INCH(ES)
SR	SHORT RADIUS, SUPPLY REGISTER
SRL	SCRUBBER RECIRCULATION LIQUID (CAUSTIC)
SS	SANITARY SEWER, SELECTOR SWITCH
SSK	SERVICE SINK
SSL	SECONDARY SLUDGE
SST	STAINLESS STEEL
ST	SLUDGE TRANSFER
STA	STATION
STB	STABILIZER
STD(S)	STANDARDS(S)
STIFF	STIFFENER
STIR	STIRRUPS
STL	STEEL
STM	STEAM
STP	STEEL PIPE
STR	STRAINER
STRUCT	STRUCTURAL
SUG	SLUICE GATE
SUPT	PIPE SUPPORT, SUPPORT
SV	SERVICE VALVE, SHUTOFF VALVE, SOLENOID VALVE
SW	SANITARY WASTE
SWR	SEAL WATER
SYM	SYMMETRICAL
SYN	SYNTHETIC

T

T	TANGENT LENGTH, THERMOSTAT, TIMER, TREAD
T&B	TOP AND BOTTOM
TAS	THREADED ANCHOR STUD
TBM	TEMPORARY BENCHMARK
TC	TOP OF CURB
TCV	TEMPERATURE CONTROL VALVE
TDH	TOTAL DYNAMIC HEAD
TDR	TIME DELAY RELAY, TOWEL DISPENSER/RECEPTACLE
TEL	TELEPHONE
TH	TEST HOLE
THK	THICKENER, THICKNESS, THICK
TKS	THICKENED SLUDGE
TLV	TELESCOPING VALVE
TMH	TELEPHONE MANHOLE
TMP	TEMPERATURE
TNK	TANK
T.O.	TOP OF
TOC	TOP OF CONCRETE
TOG	TOP OF GRATING
TOM	TOP OF MASONRY
TOS	TOP OF STEEL
T.O.W.	TOP OF WALL
TR	TRIAD (THREE CONDUCTOR SHIELDED CABLE), TIMING RELAY
TS	THICKENER SUPERNATANT OR SUBNATANT
TSD	THICKENED SLUDGE DECANT
TSPL	TURBIDIMETER SAMPLE
TSTAT	THERMOSTAT
TTB	TELEPHONE TERMINAL BOARD
TUR	TURBINE
TV	TURNING VANES
TWV	THREE-WAY VALVE
TYP	TYPICAL

U

UC	UNDERCUT
UG	UNDERGROUND
UHMWPE	ULTRA HIGH MOLECULAR WEIGHT POLYETHYLENE
UHMW	ULTRA HIGH MOLECULAR WEIGHT
UNO	UNLESS NOTED OTHERWISE
US	UTILITY SINK

V

V	VALVE
VAR	VARIES
VB	VALVE BOX
VCP	VITRIFIED CLAY PIPE
VEC	VINYL ESTER COATING
VERT	VERTICAL
VFR	VOLUMETRIC FEEDER
VG	VACUUM GAUGE, VALLEY GUTTER
VOL	VOLUME
VRV	VACUUM REGULATING VALVE
VTR	VENT THROUGH ROOF

W

W	WEST, WIDTH
W/	WITH
W/O	WITHOUT
WAS	WASTE ACTIVATED SLUDGE
WCO	WALL CLEANOUT
WEF	WALL EXHAUST FAN
WF	WALL FITTING, WASH FOUNTAIN
WH	WATER HEATER
WI	WEIGHT INDICATOR
WL	WALL LOUVER, WATER LEVEL
WM	WATER METER
WOD	WASTE OIL DRAIN
WP	WEATHERPROOF, WATERPROOF
WPT	WORKING POINT
WRG	WEIR GATE
WRS	WATER SOFTENER
WS	WATER SURFACE
WSTP	WATERSTOP
WT	WALK THROUGH, WEIGHT
WTF	WATER TREATMENT FACILITY
WTP	WATER TREATMENT PLANT
WTR	WATER
WV	WATER CONTROL VALVE
WW	WASTEWATER
WWF	WELDED WIRE FABRIC
WWTF	WASTEWATER TREATMENT FACILITY
WWTP	WASTEWATER TREATMENT PLANT

Y

Y	WYE
YCO	YARD CLEANOUT
YH	YARD HYDRANT
YT	YOUNG TALENT

REV	DATE	BY	DESCRIPTION
			BID SET

DESIGNED CE
DRAWN CE
CHECKED CE
DATE MAY 2026

COLORADO LICENSED — MATT LEE GAGE — 43662 — Digitally signed by Matt L. Gage — Date: 2026.05.06 18:08:47 -06'00' — PROFESSIONAL ENGINEER

carollo®

THORNTON WATER PROJECT

CITY OF THORNTON - THORNTON WATER PROJECT

CHEMICAL BUILDING AND PRV VAULTS

GENERAL

ABBREVIATIONS

VERIFY SCALES
BAR IS ONE INCH ON ORIGINAL DRAWING
0 1"
IF NOT ONE INCH ON THIS SHEET, ADJUST SCALES ACCORDINGLY

JOB NO. 204403
DRAWING NO. 00G05
SHEET NO. 5 OF 168

LAST SAVED BY: Ringle

PROJECT NO.:204403-100000 FILE NAME:204403_00G05.dwg

PIPE SCHEDULE ABBREVIATIONS	
ABBREVIATIONS TO DESIGNATE TEST PRESSURE/METHOD PER SPECIFICATION SECTION 40_05_00.09:	
AM	AIR METHOD
GR	GRAVITY METHOD
HH	HIGH HEAD METHOD
LH	LOW HEAD METHOD
SC	SPECIAL CASE
ABBREVIATIONS TO DESIGNATE PIPE MATERIAL:	
CI	CAST IRON
CUP	COPPER
DIP	DUCTILE IRON PIPING
FRP	FIBERGLASS REINFORCED PLASTIC
MDPE	MEDIUM DENSITY POLYETHYLENE
HDPE	HIGH DENSITY POLYETHYLENE
PVC	POLYVINYL CHLORIDE
RCP	REINFORCED CONCRETE PIPE
SST	STAINLESS STEEL
ST	STEEL
VCP	VITRIFIED CLAY PIPING
ABBREVIATIONS TO DESIGNATE CLASS, SCHEDULE, OR THICKNESS:	
CL	CLASS, FOLLOWED BY THE DESIGNATION
GA	GAUGE, PRECEDED BY THE DESIGNATION
SCH	SCHEDULE, FOLLOWED BY THE DESIGNATION
SDR	STANDARD DIMENSION RATIO
ABBREVIATIONS TO DESIGNATE PIPING JOINTS/FITTINGS:	
B&SP	BELL & SPIGOT
BFW	BUTT FUSION
CF	COMPRESSION FITTINGS
ES	EXTERNAL SNAP
FL	FLANGED
GE	GROOVED END
MJ	MECHANICAL JOINT
NH	NO HUB
PO	PUSH ON
RMJ	RESTRAINED MECHANICAL JOINT
RPO	RESTRAINED PUSH ON
SCRD	SCREWED
SFW	SOCKET FUSION
SLD	SOLDERED
SW	SOLVENT WELD
WLD	WELDED
ABBREVIATIONS TO DESIGNATE GASKETS:	
EPDM	ETHYLENE PROPYLENE DIENE MONOMER
NBR	NITRILE RUBBER (BUNA-N)
PTFE	TEFLON
ABBREVIATIONS TO DESIGNATE LINING AND COATINGS:	
CM	CEMENT MORTAR
EPU	EPOXY AND POLYURETHANE COATING SYSTEM PER SECTION 09_96_01
EPX	EPOXY COATING SYSTEM PER SECTION 09_06_01
PEN	POLYETHYLENE ENCASED

PIPING SCHEDULE

ABBR.	SERVICES	DIAMETER (INCHES)	MATERIAL	PRESSURE CL, PIPE WALL THICKNESS, OR SCHEDULE	JOINTS/ FITTINGS	GASKET MATERIAL	TEST PRESSURE/ METHOD	LINING	COATING	PIPE SPEC SECTION	COMMENTS
DR	DRAIN										
	BURIED	4	PVC	SCH 80	SW	EPDM	40 PSIG/HH	NONE	NONE	40_05_31.17	USE IPS TYPE 724 CEMENT
	BURIED	ALL	HDPE	DR 11	HEAT FUSION	NONE	40 PSIG/HH	NONE	NONE	40_05_33.03	
	EXPOSED	ALL	PVC	SCH 80	SW	EPDM	40 PSIG/HH	NONE	NONE	40_05_31.17	USE IPS TYPE 724 CEMENT
NG	NATURAL GAS										
	BURIED	PER XCEL	PER XCEL	PER XCEL	PER XCEL	PER XCEL		PER XCEL	PER XCEL		
	EXPOSED	ALL	ST 2	SCH 80	SCRD OR FL	PTFE	50 PSIG/AM	NONE	EPX-M-1	40_05_24.01	
PW	POTABLE WATER										
	BURIED	4 TO 6	DIP	CL 350	RPO OR RMJ	EPDM	100 PSIG/HH	CM	DOUBLE PEN	40_05_19.01	
	EXPOSED	3 & SMALLER	CUP	TYPE L	SLD	NONE	100 PSIG/HH	NONE	NONE	40_05_17.05	
	EXPOSED	4 TO 6	DIP	CL 53	FL	EPDM	100 PSIG/HH	CM	EPX-M-1	40_05_19.01	
RW	RAW WATER										
	BURIED	36	ST	0.375	WLD	NONE	250 PSIG/HH	CM	CM	33_05_01.01	
	EXPOSED	36-42	ST 1	0.375	FL AND WLD	EPDM	250 PSIG/HH	CM	EPX-M-1	40_05_24.01	VAULT INTERIOR
SA	SAMPLE										
	BURIED	ALL	PVC	SCH 80	SW	EPDM	40 PSIG/HH	NONE	NONE	40_05_31.17	USE IPS TYPE 724 CEMENT
	EXPOSED	ALL	PVC	SCH 80	SW	EPDM	125 PSIG/HH	NONE	NONE	40_05_31.17	USE IPS TYPE 724 CEMENT
SPE	SODIUM PERMANGANATE										
	BURIED	ALL	HDPE	CONTAINMENT: SDR 17, CARRIER: SDR 11	HEAT FUSION	HYPALON OR TEFLON	125 PSIG/HH	NONE	NONE	40_05_33.11	DOUBLE CONTAINED - ASAHI POLY-FLO
	EXPOSED	ALL	PVC	SCH 80	SW	HYPALON OR TEFLON	125 PSIG/HH	NONE	NONE	40_05_31.17	CHEMICAL FEED PIPING DOWNSTREAM OF CARRIER WATER DILUTION
	EXPOSED	ALL	PVC	SCH 80	SW	HYPALON OR TEFLON	125 PSIG/HH	NONE	ACR-PVC-1	40_05_31.17	TANK VENT PIPING - COAT EXTERIOR PORTION ONLY
	EXPOSED	ALL	316 SST	SCH 40S	SWAGELOK OR FL	HYPALON OR TEFLON	125 PSIG/HH	NONE	NONE	40_05_23.01	TANK FILL PIPING TANK OUTLET PIPING CHEMICAL FEED PANEL PIPING CHEMICAL INJECTION
UW	UTILITY WATER										
	EXPOSED	ALL	PVC	SCH 80	SW	EPDM	125 PSIG/HH	NONE	NONE	40_05_31.17	USE IPS TYPE 724 CEMENT

REV	DATE	BY	DESCRIPTION
			BID SET

DESIGNED CE
DRAWN CE
CHECKED
DATE MAY 2026

COLORADO LICENSED
57176
Registered Professional Engineer
PROFESSIONAL ENGINEER

CITY OF THORNTON - THORNTON WATER PROJECT
CHEMICAL BUILDING AND PRV VAULTS
GENERAL
PIPE SCHEDULE

VERIFY SCALES
BAR IS ONE INCH ON ORIGINAL DRAWING
0 1"
IF NOT ONE INCH ON THIS SHEET, ADJUST SCALES ACCORDINGLY

JOB NO. 204403
DRAWING NO. 00G06
SHEET NO. 6 OF 168

LAST SAVED BY: AEvans

PROJECT NO.:204403-100000 FILE NAME:204403_00G06.dwg

DESCRIPTION		UNITS	CRITERIA		
CHEMICAL STORAGE AND FEED			MIN	AVG	MAX
SODIUM PERMANGANATE (SPE)					
TYPE: 20%, 9.67 LB/GAL					
STORAGE: POLYETHYLENE TANKS					
	NUMBER	No.		2	
	VOLUME (PER TANK)	gal		4,000	
	VOLUME (TOTAL)	gal		8,000	
	DAYS OF STORAGE, (@ MAX FLOW / MAX DOSE)	days		10	
THORNTON WATER PIPELINE INJECTION					
	DOSAGE, (@ 40 MGD CHEMICAL INJECTION MANHOLE)	mg/L	0.1	1	2.1
	LIQUID FEED RATE, (@ 40 MGD CHEMICAL INJECTION MANHOLE)	gph	0.72	7.2	15.1
WEST GRAVEL LAKES PUMP STATION					
	DOSAGE (@ 40 MGD WGL PUMP STATION)	mg/L	0.1	1	2.5
	LIQUID FEED RATE, INITIAL (@ 40 MGD WGL PUMP STATION)	gph	0.72	7.2	18.0
FEED: PERISTALTIC METERING PUMPS					
	DUTY	No.		2	
	STANDBY	No.		1	
	MINIMUM FLOW (3.2 MM ELEMENT / 6.4 MM ELEMENT)	gph		0.002 / 0.011	
	MAXIMUM FLOW (3.2 MM ELEMENT / 6.4 MM ELEMENT)	gph		5.9 / 23.8	

REV	DATE	BY	DESCRIPTION
			BID SET

DESIGNED CE
DRAWN CE
CHECKED
DATE MAY 2026

COLORADO LICENSED
57176
PROFESSIONAL ENGINEER

CITY OF THORNTON - THORNTON WATER PROJECT
CHEMICAL BUILDING AND PRV VAULTS
GENERAL
DESIGN CRITERIA

VERIFY SCALES
BAR IS ONE INCH ON ORIGINAL DRAWING
0 1"
IF NOT ONE INCH ON THIS SHEET, ADJUST SCALES ACCORDINGLY

JOB NO. 204403
DRAWING NO. 00G07
SHEET NO. 7 OF 168

LAST SAVED BY: AEvans

PROJECT NO.:204403-100000 FILE NAME:204403_00G07.dwg

LINEWORK

GENERAL

- NEW CONSTRUCTION
- EXISTING FEATURES (WITHOUT AERIAL)
- EXISTING FEATURES (WITH AERIAL)
- DEMOLISH AND REMOVE
- ABANDON (ABDN)
- FUTURE WORK

PROPERTY AND RIGHT-OF-WAY

- SECTION LINE
- PROPERTY LINE OR RIGHT-OF-WAY
- EASEMENT

PLANIMETRIC FEATURES AND TOPOGRAPHY

- EXISTING INDEX CONTOUR (5280)
- EXISTING INTERMEDIATE CONTOUR
- FINAL INDEX CONTOUR (5280)
- FINAL INTERMEDIATE CONTOUR
- EXISTING GRADE (PROFILE)
- FINAL GRADE (PROFILE)
- FENCE
- CHAIN LINK FENCE
- FLOWLINE
- SHORING
- RAILROAD TRACKS
- SLOPE
- SWALE
- CURB & GUTTER
- CURB

WORK AREA BOUNDARIES

- LIMITS OF CONSTRUCTION (LOC)
- SILT FENCE (SF)
- STAGING AREA
- FLOODPLAIN/ FLOODWAY BOUNDARY
- WETLAND BOUNDARY

UTILITY PIPELINES

- PIPING 24-INCH DIAMETER & GREATER
- PIPING LESS THAN 24-INCH DIAMETER
- W — WATER
- RW — RAW WATER
- SA — SANITARY SEWER
- FM — FORCEMAIN SANITARY SEWER
- ST — STORM DRAIN
- IRR — IRRIGATION
- G — NATURAL GAS
- PG — PETROLEUM GAS
- OE — OVERHEAD ELECTRIC
- E — UNDERGROUND ELECTRIC
- TV — CABLE TV (UNDERGROUND)
- T — TELEPHONE
- FO — FIBER OPTIC

PROCESS PIPELINES

- NPW — NON-POTABLE WATER
- PE — PRIMARY EFFLUENT
- PI — PRIMARY INFLUENT
- A — AIR
- OC — ODOR CONTROL
- SC — SCUM
- RAS — RETURN ACTIVATED SLUDGE
- RCL — RECYCLED/ RECLAIMED WATER
- CST — CARBON
- HWR — HOT WATER RETURN
- HWS — HOT WATER SUPPLY
- U — MISCELLANEOUS UTILITY

SUBSURFACE UTILITY ENGINEERING

- PH-24 — SUE QUALITY LEVEL A
- W[B] — SUE QUALITY LEVEL B
- W[C] — SUE QUALITY LEVEL C
- W[D] — SUE QUALITY LEVEL D

SUE NOTES:

THE EXISTING SUBSURFACE UTILITY MAPPING INCLUDES VARYING DEGREES OF SUBSURFACE UTILITY ENGINEERING (SUE) AS DEFINED IN ASCE 38-02, STANDARD GUIDELINES FOR THE COLLECTION AND DEPICTION OF EXISTING SUBSURFACE UTILITY DATA. THE FOUR EXISTING UTILITY DATA QUALITY LEVELS ARE DEFINED BELOW:

QUALITY LEVEL A	PRECISE HORIZONTAL AND VERTICAL LOCATIONS OBTAINED BY PHYSICALLY EXPOSING AND SURVEYING THE UTILITY.
QUALITY LEVEL B	INFORMATION OBTAINED USING SURFACE GEOPHYSICAL METHODS TO DETERMINE THE EXISTENCE AND APPROXIMATE HORIZONTAL LOCATION OF THE UTILITY.
QUALITY LEVEL C	INFORMATION OBTAINED BY SURVEYING VISIBLE ABOVE GRADE FEATURES THAT ARE INDICATIVE OF SUBSURFACE UTILITIES.
QUALITY LEVEL D	INFORMATION DERIVED FROM EXISTING RECORDS OR ORAL RECOLLECTIONS.

HATCH PATTERNS

PAVEMENT

- ASPHALT PAVING
- CONCRETE PAVING
- GRANULAR SURFACE
- PERVIOUS PAVING

EARTHEN BACKFILL MATERIALS

- UNDISTURBED SOIL
- STRUCTURAL FILL OR BACKFILL
- GRANULAR PIPE BEDDING
- DRAIN ROCK, CRUSHED ROCK, OR GRAVEL
- CONCRETE
- RIPRAP
- CLSM OR NATIVE MATERIAL SLURRY
- BEDROCK
- SOIL CEMENT
- CLAY

WORK AND RESTORATION AREAS

- STAGING AREA
- WETLAND
- LANDSCAPING GRASS OR SOD

SYMBOLS

SYMBOL	DESCRIPTION	SYMBOL	DESCRIPTION
	CONTROL POINT		SHRUB/HEDGE
	SURVEY MONUMENT		TREE
BH-XX	SOIL BORING		SIGN POST
PH-XX	POTHOLE		LIGHT
S	SANITARY MANHOLE		UTILITY POLE
D	STORM MANHOLE		GUY WIRE
	CATCH BASIN		FIRE HYDRANT
E	ELEC MANHOLE		YARD HYDRANT
M	METER BOX	CO	CLEANOUT
P	PULL BOX		AIR RELEASE VALVE
T	TELEPHONE PEDESTAL		BLOW OFF VALVE
	ELECTRICAL TOWER		SERVICE CONNECTION
	GATE		BURIED VALVE
	HEADWALL		PIPE CAP
	ROCK WALL		REDUCER

COORDINATES / ELEVATION

COORDINATES: XX — N=1600000.00, E=1000000.00

FINAL SPOT ELEVATION: FG XX.XX / TC XX.XX

EXISTING SPOT ELEVATION: X 1325.00

SLOPE CALLOUT: 2:1 | 2 (1) | 2.0% | S=0.0020

ALIGNMENT CURVES: LENGTH; CURVE NUMBER (CXX); PC; CLOCKWISE; ANGLE; PT; RADIUS; RADIUS POINT; EDGE OF PVMT OR OUTSIDE FACE OF CURB

811 Know what's below. Call before you dig.

Call before you Overhead

REV	DATE	BY	DESCRIPTION
			BID SET

DESIGNED CE
DRAWN CE
CHECKED CE
DATE MAY 2026

COLORADO LICENSED — COURTNEY D. HARTER — 55165 — Digitally signed by Courtney D. Harter — Date: 2026.05.20 09:40:57 -07'00' — PROFESSIONAL ENGINEER

carollo

THORNTON WATER PROJECT

CITY OF THORNTON - THORNTON WATER PROJECT

CHEMICAL BUILDING AND PRV VAULTS

CIVIL

CIVIL LEGEND

VERIFY SCALES
BAR IS ONE INCH ON ORIGINAL DRAWING
0 — 1"
IF NOT ONE INCH ON THIS SHEET, ADJUST SCALES ACCORDINGLY

JOB NO. 204403
DRAWING NO. 00GC01
SHEET NO. 8 OF 168

Plot Date: 10/5/2022 11:08:46 AM

LAST SAVED BY: AEvans

PROJECT NO. 204403-100000 FILE NAME: 204403_00GC01.dwg

ABBREVIATIONS

	△	DELTA, DEFLECTION ANGLE, OR CENTRAL ANGLE
	#	NUMBER (REBAR Ø)
	@	AT (MEASUREMENT)
	+/-	PLUS/MINUS
A	ABC	AGGREGATE BASE COURSE
	ABDN	ABANDONED
	AC	ASPHALTIC CONCRETE
	ACI	AMERICAN CONCRETE INSTITUTE
	ACP	ASBESTOS CEMENT PIPE
	ADDL	ADDITIONAL
	ADJ	ADJACENT, ADJUST(ABLE)
	AL	ALUMINUM
	APPROX	APPROXIMATE(LY)
	ARV	AIR RELEASE VALVE
	ASSY	ASSEMBLY
	ASTM	AMERICAN SOCIETY FOR TESTING AND MATERIALS
	AVG	AVERAGE
	AVV	AIR AND VACUUM VALVE
B	BC	BEGIN CURB
	BF	BLIND FLANGE
	BFP	BACK FLOW PREVENTER
	BFV	BUTTERFLY VALVE
	BH	BOREHOLE
	BLDG	BUILDING
	BM	BENCH MARK
	BO	BLOW OFF
	BOC	BACK OF CURB
	BOP	BOTTOM OF PIPE
	BOT	BOTTOM
	BOW	BOTTOM OF WALL
	BV	BALL VALVE
	BVC	BEGINNING OF VERTICAL CURVE
	BYP	BYPASS
C	CATV	CABLE TV
	CAV	COMBINATION AIR VALVE
	CB	CATCH BASIN
	CC	CENTER OF CURVATURE, CENTER TO CENTER, CONCRETE CURB
	CDT	CONDUIT
	CF	CUBIC FEET
	CFM	CUBIC FOOT PER MINUTE
	CFS	CUBIC FEET PER SECOND
	CI	CAST IRON
	CIP	CAST IRON PIPE
	CIPP	CURED IN PLACE PIPE
	CJ	CONSTRUCTION JOINT
	CL	CENTER LINE
	CLK	CHAIN LINK
	CLR	CLEAR / CLEARANCE
	CLSM	CONTROL LOW STRENGTH MATERIAL
	CMLC	CEMENT MORTAR LINED AND COATED
	CMP	CORRUGATED METAL PIPE
	CMU	CONCRETE MASONRY UNIT
	CO	CLEANOUT
	CONC	CONCRETE
	CONN	CONNECT, CONNECTION
	CONST	CONSTRUCTION
	CONT	CONTINUOUS OR CONTINUATION OR (D)
	COORD	COORDINATE
	CP	CONTROL POINT
	CPLG	COUPLING
	CSP	CORRUGATED STEEL PIPE
	CTJ	CONTROL JOINT
	CTL	CONTROL
	CTR	CENTER, CENTERED
	CU	CUBIC
	CULV	CULVERT
	CY	CUBIC YARD
D	D	DRAIN, DEPTH
	D/W	DRIVEWAY APRON
	DEG or °	DEGREE
	DEMO	DEMOLISH, DEMOLITION
	DET	DETAIL
	DI	DROP INLET
	DIA or Ø	DIAMETER
	DIFF	DIFFERENCE
	DIM	DIMENSION
	DIP	DUCTILE IRON PIPE
	DIST	DISTANCE
	DR	DRIVE, DRAIN
	DWG(S)	DRAWING(S)
E	E	ELECTRICAL, EAST
	EA	EACH
	EC	END OF CURB
	ECC	ECCENTRIC REDUCER
	EG	EXISTING GROUND
	EL	ELEVATION
	ELL	ELBOW
	ELEC	ELECTRICAL
	EMH	ELECTRICAL MANHOLE
	EOP	END OF PIPE
	EP	EDGE OF PAVEMENT
	EQ	EQUAL
	EQUIP	EQUIPMENT
	ES	EACH SIDE
	ESMT	EASEMENT
	EVC	END OF VERTICAL CURVE
	EW	EACH WAY
	EX/EXIST	EXISTING
	EXP	EXPANSION
	EXT	EXTERIOR
F	FC	FLEXIBLE COUPLING
	FCA	FLANGE COUPLING ADAPTER
	FF	FINISHED FLOOR
	FG	FINISHED GRADE
	FH	FIRE HYDRANT
	FIN	FINISH
	FL	FLOOR, FLOW LINE
	FLEX	FLEXIBLE
	FLG	FLANGE(D)
	FM	FORCE MAIN
	FND	FOUNDATION
	FO	FIBER OPTIC
	FOB	FLAT ON BOTTOM
	FOC	FACE OF CURB
	FOT	FLAT ON TOP
	FPM	FEET PER MINUTE
	FS	FIRE SERVICES
	FSP	FABRICATED STEEL PIPE
	FT or '	FOOT, FEET
	FTG	FOOTING
G	G	GAS, GUTTER
	GA	GAUGE
	GAL	GALLONS
	GALV	GALVANIZE(D)
	GB	GRADE BREAK
	GC	GROOVED COUPLING
	GEN	GENERAL, GENERATOR
	GM	GAS METER
	GND	GROUND
	GPD	GALLONS PER DAY
	GPM	GALLONS PER MINUTE
	GR	GRADE
	GRTG	GRATING
	GSP	GALVANIZED STEEL PIPE
	GV	GATE VALVE
H	HDPE	HIGH DENSITY POLYETHYLENE
	HORIZ	HORIZONTAL
	HP	HIGH POINT
	HPGM	HIGH PRESSURE GAS MAIN
	HW	HEADWALL, HOT WATER
	HWL	HIGH WATER LEVEL
	HWY	HIGHWAY
	HYD	HYDRANT
I	ID	INSIDE DIAMETER
	IE	INVERT ELEVATION
	IN or "	INCHES
	INCL	INCLUDE, INCLUDING
	INSTR	INSTRUMENTATION
	INV	INVERT
	IP	IRON PIPE
	IRR	IRRIGATION
J	JT	JOINT
L	L	LENGTH
	LAT	LATERAL, LATITUDE
	LB(S)	POUND(S)
	LF	LINEAL FEET
	LH	LEFT HAND
	LONG	LONGITUDINAL
	LP	LOW POINT
	LT	LEFT
	LWL	LOW WATER LEVEL
M	MATL	MATERIAL
	MAX	MAXIMUM
	MECH	MECHANICAL
	MFR	MANUFACTURER
	MGD	MILLION GALLONS PER DAY
	MH	MANHOLE
	MIN	MINIMUM
	MISC	MISCELLANEOUS
	MJ	MECHANICAL JOINT
	MON	MONUMENT
N	N	NORTH, NORTHING
	NA	NOT APPLICABLE
	NE	NORTHEAST
	NG	NATURAL GAS
	NIC	NOT IN CONTRACT
	NO. or #	NUMBER
	NOM	NOMINAL
	NW	NORTHWEST
O	O.F.	OUTSIDE FACE
	OC	ON CENTER
	OD	OUTSIDE DIAMETER, OUTSIDE DIMENSION
	OHE	OVERHEAD ELECTRIC
P	PB	PULLBOX
	PC	POINT OF CURVATURE
	PCC	POINT OF COMPOUND CURVE
	PERP	PERPENDICULAR
	PH	POTHOLE
	PI	POINT OF INTERSECTION
	PL	PLATE, PROPERTY LINE
	POB	POINT OF BEGINNING
	PP	POWER POLE
	PRC	POINT OF REVERSE CURVATURE
	PROP	PROPERTY
	PL	PROPERTY LINE
	PSI	POUNDS PER SQUARE INCH
	PT	POINT, POINT OF TANGENCY
	PV	PLUG VALVE
	PVC	POINT OF VERTICAL CURVATURE
	PVC	POLYVINYL CHLORIDE
	PVI	POINT OF VERTICAL INTERSECTION
	PVMT	PAVEMENT
	PVT	POINT OF VERTICAL TANGENCY
Q	QTY	QUANTITY
R	R	RADIUS
	RAD	RADIAL
	RCB	REINFORCED CONCRETE BOX CULVERT
	RCP	REINFORCED CONCRETE PIPE
	RED	REDUCER
	REF	REFERENCE
	REINF	REINFORCE(D)(ING)(MENT)
	REQ'D	REQUIRED
	REV	REVISION
	RFCA	RESTRAINED FLEX COUPLING ADAPTER
	RH	RIGHT HAND
	R/W or ROW	RIGHT OF WAY
	RR	RAILROAD
	RT	RIGHT
S	S	SLOPE, SOUTH
	SCH	SCHEDULE
	SD	STORM DRAIN
	SDDI	STORM DRAIN DROP INLET
	SDMH	STORM DRAIN MANHOLE
	SE	SOUTHEAST
	SECT	SECTION
	SHLD	SHOULDER
	SHT	SHEET
	SIM	SIMILAR
	SL	SLOPE
	SPEC(S)	SPECIFICATION(S)
	SQ	SQUARE
	SS	SANITARY SEWER
	SSCO	SANITARY SEWER CLEANOUT
	SSMH	SANITARY SEWER MANHOLE
	SST	STAINLESS STEEL
	ST	STREET
	STA	STATION
	STD(S)	STANDARD(S)
	STL	STEEL
	STRUCT	STRUCTURAL
	SW	SOUTHWEST
	SWK	SIDEWALK
	SYM	SYMMETRICAL
T	TB	THRUST BLOCK
	TC	TOP OF CURB
	TEL	TELEPHONE
	TOG	TOP OF GRATING
	TMH	TELEPHONE MANHOLE
	TOC	TOP OF CONCRETE
	TOP T.O.W. or TW	TOP OF PIPE TOP OF WALL
	TRD	TREAD
	TYP	TYPICAL
U	UC	UNDERCUT
	UG	UNDERGROUND
	UGE	UNDERGROUND ELECTRIC
	UNKN	UNKNOWN
	UNO	UNLESS NOTED OTHERWISE
	USA	UNDERGROUND SERVICE ALERT
V	V	VERTICAL, VALVE
	VAR	VARIES
	VB	VALVE BOX
	VC	VERTICAL CURVE, VICTAULIC COUPLER
	VCP	VITRIFIED CLAY PIPE
	VERT	VERTICAL
	VLT	VAULT
	VPI	VERTICAL POINT OF INTERSECTION
W	W	WATER, WIDTH OR WEST
	W/	WITH
	W/O	WITHOUT
	WL	WATER LEVEL
	WM	WATER METER
	WS	WATER SURFACE
	WSP	WELDED STEEL PIPE
	WSTP	WATERSTOP
	WV	WATER CONTROL VALVE
	WW	WASTEWATER
X	XFMR	TRANSFORMER
Y	YD	YARD

NOTES

GENERAL NOTES:

1. THE CONTRACTOR IS RESPONSIBLE FOR THE PROTECTION OF ALL SURVEY MONUMENTS AND CORNER MARKERS. SURVEY MONUMENTS AND PROPERTY CORNER MARKERS DAMAGED BY CONSTRUCTION ACTIVITIES SHALL BE REESTABLISHED BY A PROFESSIONAL SURVEYOR LICENSED IN THE STATE WHERE THE WORK IS CONSTRUCTED.
2. DIMENSIONS TO STRUCTURES, PIPING, PAVING, AND OTHER IMPROVEMENTS ARE APPROXIMATE. FIELD VERIFY ALL DIMENSIONS AND CONDITIONS IN ADVANCE OF CONSTRUCTION TO AVOID DELAYS AND REPORT ANY DISCREPANCIES TO THE ENGINEER.
3. ALL PLANIMETRIC FEATURES AND STRUCTURES DISTURBED DURING CONSTRUCTION SUCH AS CURBS AND GUTTERS, ACCESS DRIVES, WALKWAYS, PAVING BRICKS, FENCING, RETAINING WALLS, SIGNS, POSTS, MARKERS, MAIL BOXES, ETC. SHALL BE RESTORED TO CONDITIONS PRIOR TO CONSTRUCTION OF THE WORK.
4. THE CONTRACTOR IS RESPONSIBLE FOR DAMAGE TO EXISTING ROADS, BUILDINGS, STRUCTURES, OR ANY OTHER FEATURE RESULTING FROM CONTRACTORS CONSTRUCTION ACTIVITIES. REPAIR TO THE SATISFACTION OF THE ENGINEER AT NO COST TO THE OWNER.
5. PROTECT AND MAINTAIN ALL EXISTING TREES, SHRUBS, AND PLANTS, UNLESS OTHERWISE NOTED.
6. OBTAIN ALL NECESSARY PERMITS PRIOR TO CONSTRUCTION IN ACCORDANCE WITH THE CONTRACT DOCUMENTS.
7. STAGING AREAS SHOWN ON THE PLANS ARE PROVIDED BY THE OWNER FOR THE CONTRACTOR'S USE. ADDITIONAL STAGING AREAS REQUIRED FOR THE WORK SHALL BE THE RESPONSIBILITY OF THE CONTRACTOR INCLUDING SEPARATE AGREEMENTS AND ASSOCIATED COST.
8. INSTALL PIPELINES, PAVING, WALKWAYS, AND CURB AND GUTTER AT UNIFORM GRADE BETWEEN ELEVATIONS INDICATED ON THE DRAWINGS.
9. MAINTAIN DRIVEWAY ACCESS TO ALL ADJOINING PROPERTIES. PREPARE TRAFFIC CONTROL PLANS FOR MAINTAINING ACCESS AND SUBMIT TO THE AUTHORITY HAVING JURISDICTION FOR REVIEW AND APPROVAL.
10. COMPLY WITH TRENCH PLATE REQUIREMENTS OF THE AUTHORITY HAVING JURISDICTION. IF TRENCH PLATE REQUIREMENTS ARE NOT SPECIFIED, APPLY SKID RESISTANT COATING ON THE TRENCH PLATES AND COLD MIX ASPHALT CONCRETE AT THE EDGES. THE TRENCH PLATES SHALL BE NOTCHED INTO THE ASPHALT CONCRETE OR TRAVELED SURFACE TO PREVENT SLIPPAGE AND ROCKING UNDER TRAFFIC.
11. COMPLY WITH ALL FEDERAL, STATE, COUNTY, AND LOCAL LAWS AND ORDINANCES RELATING TO THE SAFETY AND CHARACTER OF WORK, EQUIPMENT, AND PERSONNEL. THIS INCLUDES, BUT IS NOT LIMITED TO SHEETING, SHORING, BRACING, VENTILATION, TRAFFIC CONTROL AND MAINTENANCE OF BARRICADES AND WARNING DEVICES.
12. KEEP COMPLETE AND ACCURATE RECORD DRAWINGS OF THE WORK, UTILITY POTHOLE DATA, AND EXISTING CONDITIONS THAT HAVE CHANGED OR ARE DIFFERENT THAN SHOWN ON THE PLANS.

GENERAL UTILITY NOTES:

1. EXISTING UTILITIES SHOWN ON THE PLANS ARE BASED ON A COMBINATION OF UTILITY MAPS, RECORD DRAWINGS, SURVEY, AND UTILITY LOCATION SERVICES. THIS REPRESENTS THE BEST AVAILABLE INFORMATION AT THE TIME OF DESIGN. VERIFY AND VALIDATE LOCATIONS AND ELEVATIONS OF UTILITIES USING CONTRACTOR'S UTILITY LOCATE INVESTIGATIONS AND/OR SUBSURFACE UTILITY ENGINEERING (SUE). UPDATE AS-BUILT DRAWINGS MONTHLY WITH ACTUAL UTILITY LOCATIONS AND ELEVATIONS.
2. CONTACT 811 AND PRIVATE UTILITIES TO IDENTIFY AND LOCATE ALL BURIED UTILITIES. COORDINATE CONSTRUCTION ACTIVITIES WITH ALL UTILITY OWNERS TO DEFINE THE REQUIREMENTS AND METHODS. PROTECT, SUPPORT, ADJUST, OR RELOCATE UTILITIES AFFECTED BY THE PROPOSED WORK. MAKE ARRANGEMENTS FOR UTILITY OWNER INSPECTIONS, IF REQUIRED, PRIOR TO CONSTRUCTION.
3. EXISTING UTILITY SERVICE CONNECTIONS MAY NOT BE SHOWN ON THE PLANS. THE CONTRACTOR SHALL TAKE NECESSARY PRECAUTIONS TO IDENTIFY, LOCATE, AND PROTECT EXISTING SERVICE CONNECTIONS.
4. PRIOR TO EXCAVATION FOR NEW STRUCTURES, ELECTRICAL CONDUIT, FABRICATION OF NEW PIPING AND/OR OTHER PROPOSED UTILITIES, CONTRACTOR SHALL BE RESPONSIBLE FOR VERIFYING THE LOCATION OF ALL EXISTING PIPING AND UTILITIES IN THE CONSTRUCTION AREA. THE CONTRACTOR SHALL TEMPORARILY RELOCATE CONFLICTING EXISTING UTILITIES AT NEW TO EXISTING CONNECTIONS AND REINSTALL THEM AS REQUIRED TO ELIMINATE THE CONFLICT.
5. CONTACT ALL OVERHEAD ELECTRIC, CABLE, AND COMMUNICATION UTILITY OWNERS PRIOR TO CONSTRUCTION AND MAKE ARRANGEMENTS FOR ANY SPECIAL OWNER REQUIREMENTS INCLUDING ENCROACHMENT PERMITS, CLEARANCE REQUIREMENTS, AND UTILITY OWNER INSPECTIONS PRIOR TO CONSTRUCTION. COMPLY WITH THE NATIONAL ELECTRIC CODE WHILE IN PROXIMITY TO OVERHEAD ELECTRIC LINES.

GENERAL PIPELINE NOTES:

1. PROVIDE A MINIMUM COVER OF 4'-0" FOR ALL PIPELINES UNLESS THE DEPTH IS SPECIFICALLY INDICATED ON THE DRAWINGS. ROUTE PIPELINES AS SHOWN UNLESS MINOR REVISIONS ARE NECESSARY TO MISS EXISTING PIPES, STRUCTURES, ETC.
2. ADJUST VALVE BOXES, VAULTS, PULL BOXES, AND MANHOLES TO FINISHED GRADE UNLESS OTHERWISE SHOWN OR DIRECTED. MANHOLES, VAULTS, AND OTHER SURFACE COMPLETED APPURTENANCES IN OPEN AREAS SHALL BE SET SIX INCHES ABOVE FINISHED GRADE.
3. REROUTE EXISTING PIPING, AS REQUIRED, TO AVOID CONFLICTS WITH NEW UTILITIES, STRUCTURES, OR OTHER FACILITIES. THE EXISTING PIPE SHALL REMAIN IN SERVICE UNTIL NEW PIPING IS READY TO BE PLACED INTO SERVICE. DOWNTIME SHALL BE A MAXIMUM OF 2 HOURS, UNLESS OTHERWISE SPECIFIED.
4. PRIOR TO MAKING NEW TO EXISTING UTILITY TIE-INS, EXPOSE AND VERIFY LOCATION AND ELEVATION OF THE TIE-IN POINT. CONFIRM THE EXISTING PIPE MATERIAL, DIAMETER, COATING, CONDITION, AND ANY OTHER INFORMATION REQUIRED TO MAKE THE CONNECTION. SURVEY AND ACCURATELY RECORD THE LOCATION AND ELEVATION OF TIE-IN POINT ON THE RECORD DRAWINGS.
5. SCHEDULE TIE-INS IN ACCORDANCE WITH THE SEQUENCING REQUIREMENTS OF THE CONTRACT AND THE OWNER'S OPERATIONAL REQUIREMENTS AND LIMITATIONS. PROVIDE ADVANCE NOTICE TO THE ENGINEER PRIOR TO COMMENCEMENT OF ANY TIE-IN WORK.
7. PROVIDE SHEETING AND SHORING REQUIRED TO PROTECT EXISTING STRUCTURES, PIPES AND FACILITIES. SUPPORT EXISTING UTILITIES AT CROSSING LOCATIONS. PROTECT EXISTING UTILITIES RUNNING PARALLEL TO NEW TRENCHES FROM UNDERMINING OF EXISTING UTILITY BEDDING AND BACKFILL.
8. SEE MECHANICAL PLANS FOR CONTINUATION OF PIPING AT STRUCTURES.

GENERAL EARTHWORK NOTES:

1. CLEAR THE CONSTRUCTION AREA OF OBSTRUCTIONS SCHEDULED FOR DEMOLITION INCLUDING EXISTING FOUNDATIONS, BUILDINGS, FENCES, WALLS, STUMPS, BRUSH, WEEDS, RUBBISH, TREES, BOULDERS, AND ANY OTHER ITEMS WHICH INTERFERES WITH CONSTRUCTION OPERATIONS.
2. GRUB AND DISPOSE OF TREE TRUNKS AND ROOT MATERIAL BELOW THE GROUND SURFACE THAT REMAIN AFTER CLEARING.
3. DISPOSE OF THE UNACCEPTABLE BACKFILL MATERIAL RESULTING FROM CLEARING AND GRUBBING OPERATIONS AT NO ADDITIONAL COST TO THE OWNER.
4. STRIP AND STOCKPILE TOPSOIL TO A DEPTH OF 12 INCHES, OR AS INDICATED ON THE DRAWINGS. TOPSOIL DEPTH WILL BE DETERMINED IN THE FIELD AS SOIL CONDITIONS DICTATE.
5. PLACE STOCKPILED TOPSOIL AS FINAL LIFT OF SITE GRADING AND RESTORE SITE AS SPECIFIED.
6. RESTORE ROCK AND AGGREGATE STORAGE AREAS BY EXCAVATING SOILS CONTAINING ROCK OR AGGREGATE AND PLACING WITH TOPSOIL AS THE FINAL LIFT.
7. COMPLY WITH LOCAL CONSTRUCTION STORM WATER DISCHARGE REGULATIONS AND REQUIREMENTS.

Know what's below. Call before you dig.

Call before you Overhead

Plot Date: 10/5/2022 11:06:47 AM

LAST SAVED BY: AEvans

REV	DATE	BY	DESCRIPTION
			BID SET

DESIGNED DES
DRAWN DWN
CHECKED CHK
DATE MAY 2026

COLORADO LICENSED MATT LEE GEER 43662 Digitally signed by Courtney Di Rusteo Date: 2022.10.05 20:53:04 -06'00' PROFESSIONAL ENGINEER

carollo

THORNTON WATER PROJECT

CITY OF THORNTON - THORNTON WATER PROJECT

CHEMICAL BUILDING AND PRV VAULTS

CIVIL

CIVIL NOTES AND ABBREVIATIONS

VERIFY SCALES
BAR IS ONE INCH ON ORIGINAL DRAWING
0 1"
IF NOT ONE INCH ON THIS SHEET, ADJUST SCALES ACCORDINGLY

JOB NO. 204403
DRAWING NO. 00GC02
SHEET NO. 9 OF 168

PROJECT NO. 204403-100000 FILE NAME: 204403_00GC02.dwg

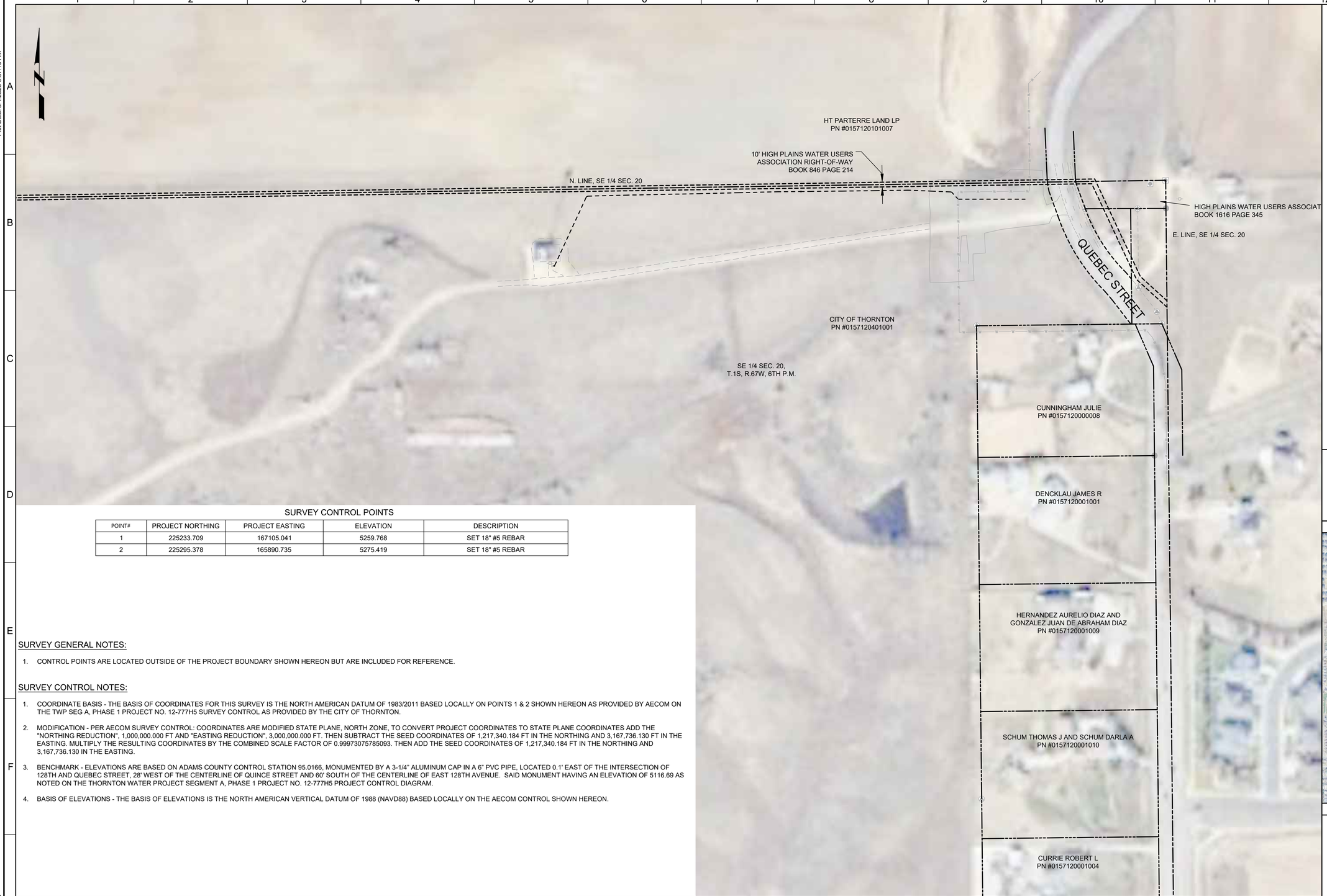

SURVEY CONTROL POINTS

POINT#	PROJECT NORTHING	PROJECT EASTING	ELEVATION	DESCRIPTION
1	225233.709	167105.041	5259.768	SET 18" #5 REBAR
2	225295.378	165890.735	5275.419	SET 18" #5 REBAR

SURVEY GENERAL NOTES:

1. CONTROL POINTS ARE LOCATED OUTSIDE OF THE PROJECT BOUNDARY SHOWN HEREON BUT ARE INCLUDED FOR REFERENCE.

SURVEY CONTROL NOTES:

1. COORDINATE BASIS - THE BASIS OF COORDINATES FOR THIS SURVEY IS THE NORTH AMERICAN DATUM OF 1983/2011 BASED LOCALLY ON POINTS 1 & 2 SHOWN HEREON AS PROVIDED BY AECOM ON THE TWP SEG A, PHASE 1 PROJECT NO. 12-777H5 SURVEY CONTROL AS PROVIDED BY THE CITY OF THORNTON.
2. MODIFICATION - PER AECOM SURVEY CONTROL: COORDINATES ARE MODIFIED STATE PLANE, NORTH ZONE, TO CONVERT PROJECT COORDINATES TO STATE PLANE COORDINATES ADD THE "NORTHING REDUCTION", 1,000,000.000 FT AND "EASTING REDUCTION", 3,000,000.000 FT. THEN SUBTRACT THE SEED COORDINATES OF 1,217,340.184 FT IN THE NORTHING AND 3,167,736.130 FT IN THE EASTING. MULTIPLY THE RESULTING COORDINATES BY THE COMBINED SCALE FACTOR OF 0.99973075785093. THEN ADD THE SEED COORDINATES OF 1,217,340.184 FT IN THE NORTHING AND 3,167,736.130 IN THE EASTING.
3. BENCHMARK - ELEVATIONS ARE BASED ON ADAMS COUNTY CONTROL STATION 95.0166, MONUMENTED BY A 3-1/4" ALUMINUM CAP IN A 6" PVC PIPE, LOCATED 0.1' EAST OF THE INTERSECTION OF 128TH AND QUEBEC STREET, 28' WEST OF THE CENTERLINE OF QUINCE STREET AND 60' SOUTH OF THE CENTERLINE OF EAST 128TH AVENUE. SAID MONUMENT HAVING AN ELEVATION OF 5116.69 AS NOTED ON THE THORNTON WATER PROJECT SEGMENT A, PHASE 1 PROJECT NO. 12-777H5 PROJECT CONTROL DIAGRAM.
4. BASIS OF ELEVATIONS - THE BASIS OF ELEVATIONS IS THE NORTH AMERICAN VERTICAL DATUM OF 1988 (NAVD88) BASED LOCALLY ON THE AECOM CONTROL SHOWN HEREON.

GENERAL NOTES:

1. BASIS OF SURVEY: NAD 1983/2011 AND NAVD88.

811 Know what's below. Call before you dig.

Call before you Overhead

KEY MAP



SCALE

0 50' 100' 200'

SCALE: 1" = 100' (HORIZ)

REV	DATE	BY	DESCRIPTION
			BID SET

DESIGNED CDH
DRAWN CDH
CHECKED JJK
DATE MAY 2026

COLORADO LICENSED PROFESSIONAL ENGINEER 55165 Digitally signed by Courtney D. Husted Date: 2026.05.15 30:29:06-06'00'

carollo®

THORNTON WATER PROJECT

CITY OF THORNTON - THORNTON WATER PROJECT

CHEMICAL BUILDING AND PRV VAULTS

CIVIL

SIGNAL HILL SURVEY CONTROL PLAN

VERIFY SCALES
BAR IS ONE INCH ON ORIGINAL DRAWING
0 1"
IF NOT ONE INCH ON THIS SHEET, ADJUST SCALES ACCORDINGLY

JOB NO. 204403
DRAWING NO. 00GC03
SHEET NO. 10 OF 168

Plot Date: 5/4/2026 6:37:40 AM

LAST SAVED BY: CHusted

PROJECT NO. 200417-100000 FILE NAME: 204403_00GC03.dwg

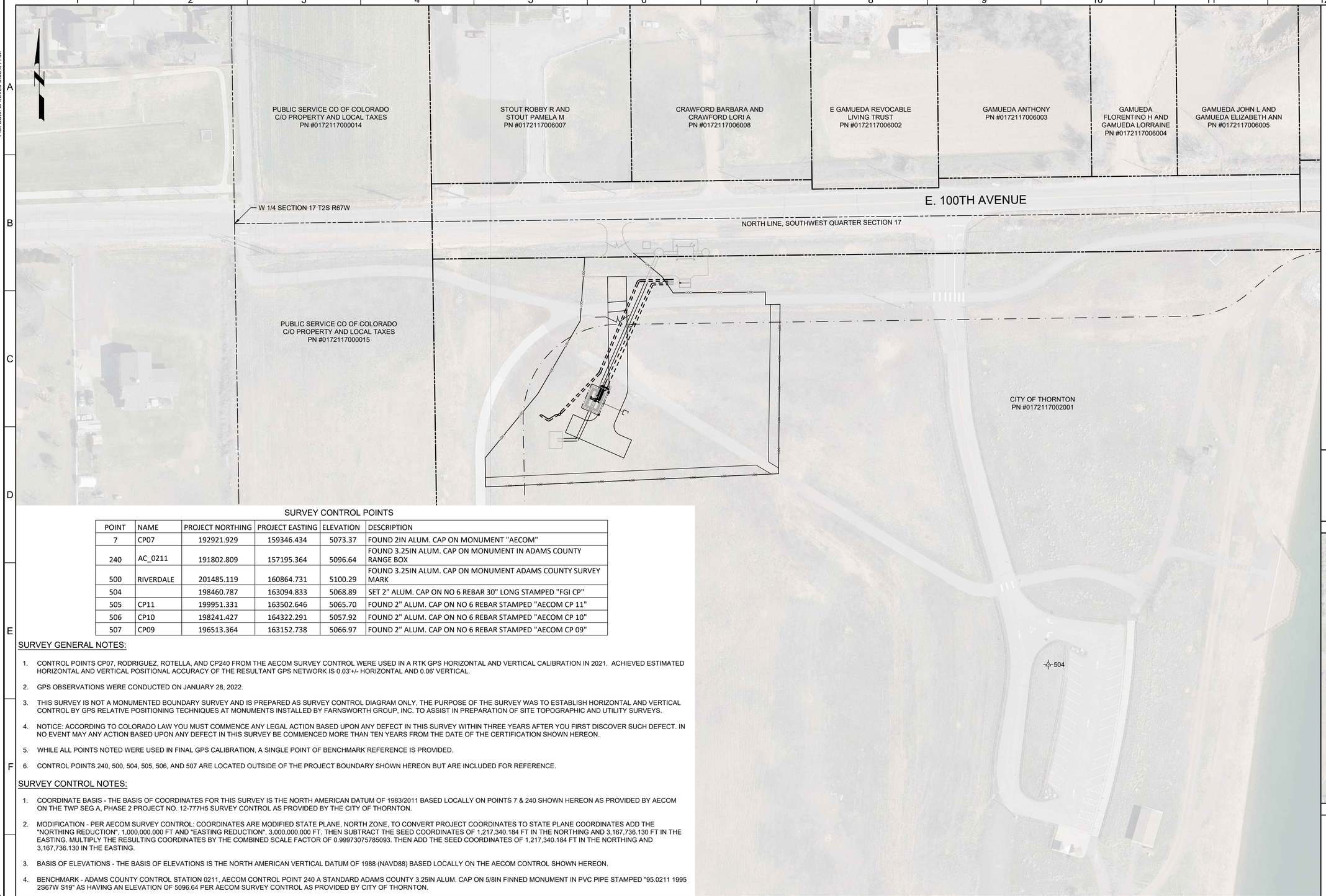

SURVEY CONTROL POINTS

POINT	NAME	PROJECT NORTHING	PROJECT EASTING	ELEVATION	DESCRIPTION
7	CP07	192921.929	159346.434	5073.37	FOUND 2IN ALUM. CAP ON MONUMENT "AECOM"
240	AC_0211	191802.809	157195.364	5096.64	FOUND 3.25IN ALUM. CAP ON MONUMENT IN ADAMS COUNTY RANGE BOX
500	RIVERDALE	201485.119	160864.731	5100.29	FOUND 3.25IN ALUM. CAP ON MONUMENT ADAMS COUNTY SURVEY MARK
504		198460.787	163094.833	5068.89	SET 2" ALUM. CAP ON NO 6 REBAR 30" LONG STAMPED "FGI CP"
505	CP11	199951.331	163502.646	5065.70	FOUND 2" ALUM. CAP ON NO 6 REBAR STAMPED "AECOM CP 11"
506	CP10	198241.427	164322.291	5057.92	FOUND 2" ALUM. CAP ON NO 6 REBAR STAMPED "AECOM CP 10"
507	CP09	196513.364	163152.738	5066.97	FOUND 2" ALUM. CAP ON NO 6 REBAR STAMPED "AECOM CP 09"

SURVEY GENERAL NOTES:

1. CONTROL POINTS CP07, RODRIGUEZ, ROTELLA, AND CP240 FROM THE AECOM SURVEY CONTROL WERE USED IN A RTK GPS HORIZONTAL AND VERTICAL CALIBRATION IN 2021. ACHIEVED ESTIMATED HORIZONTAL AND VERTICAL POSITIONAL ACCURACY OF THE RESULTANT GPS NETWORK IS 0.03'+/- HORIZONTAL AND 0.06' VERTICAL.
2. GPS OBSERVATIONS WERE CONDUCTED ON JANUARY 28, 2022.
3. THIS SURVEY IS NOT A MONUMENTED BOUNDARY SURVEY AND IS PREPARED AS SURVEY CONTROL DIAGRAM ONLY, THE PURPOSE OF THE SURVEY WAS TO ESTABLISH HORIZONTAL AND VERTICAL CONTROL BY GPS RELATIVE POSITIONING TECHNIQUES AT MONUMENTS INSTALLED BY FARNSWORTH GROUP, INC. TO ASSIST IN PREPARATION OF SITE TOPOGRAPHIC AND UTILITY SURVEYS.
4. NOTICE: ACCORDING TO COLORADO LAW YOU MUST COMMENCE ANY LEGAL ACTION BASED UPON ANY DEFECT IN THIS SURVEY WITHIN THREE YEARS AFTER YOU FIRST DISCOVER SUCH DEFECT. IN NO EVENT MAY ANY ACTION BASED UPON ANY DEFECT IN THIS SURVEY BE COMMENCED MORE THAN TEN YEARS FROM THE DATE OF THE CERTIFICATION SHOWN HEREON.
5. WHILE ALL POINTS NOTED WERE USED IN FINAL GPS CALIBRATION, A SINGLE POINT OF BENCHMARK REFERENCE IS PROVIDED.
6. CONTROL POINTS 240, 500, 504, 505, 506, AND 507 ARE LOCATED OUTSIDE OF THE PROJECT BOUNDARY SHOWN HEREON BUT ARE INCLUDED FOR REFERENCE.

SURVEY CONTROL NOTES:

1. COORDINATE BASIS - THE BASIS OF COORDINATES FOR THIS SURVEY IS THE NORTH AMERICAN DATUM OF 1983/2011 BASED LOCALLY ON POINTS 7 & 240 SHOWN HEREON AS PROVIDED BY AECOM ON THE TWP SEG A, PHASE 2 PROJECT NO. 12-777H5 SURVEY CONTROL AS PROVIDED BY THE CITY OF THORNTON.
2. MODIFICATION - PER AECOM SURVEY CONTROL: COORDINATES ARE MODIFIED STATE PLANE, NORTH ZONE, TO CONVERT PROJECT COORDINATES TO STATE PLANE COORDINATES ADD THE "NORTHING REDUCTION", 1,000,000.000 FT AND "EASTING REDUCTION", 3,000,000.000 FT. THEN SUBTRACT THE SEED COORDINATES OF 1,217,340.184 FT IN THE NORTHING AND 3,167,736.130 FT IN THE EASTING. MULTIPLY THE RESULTING COORDINATES BY THE COMBINED SCALE FACTOR OF 0.99973075785093. THEN ADD THE SEED COORDINATES OF 1,217,340.184 FT IN THE NORTHING AND 3,167,736.130 IN THE EASTING.
3. BASIS OF ELEVATIONS - THE BASIS OF ELEVATIONS IS THE NORTH AMERICAN VERTICAL DATUM OF 1988 (NAVD88) BASED LOCALLY ON THE AECOM CONTROL SHOWN HEREON.
4. BENCHMARK - ADAMS COUNTY CONTROL STATION 0211, AECOM CONTROL POINT 240 A STANDARD ADAMS COUNTY 3.25IN ALUM. CAP ON 5/8IN FINNED MONUMENT IN PVC PIPE STAMPED "95.0211 1995 2S67W S19" AS HAVING AN EVALUATION OF 5096.64 PER AECOM SURVEY CONTROL AS PROVIDED BY CITY OF THORNTON.

GENERAL NOTES:

1. BASIS OF SURVEY: NAD 1983/2011 AND NAVD88.

811 Know what's below. Call before you dig.

Call before you Overhead

KEY MAP

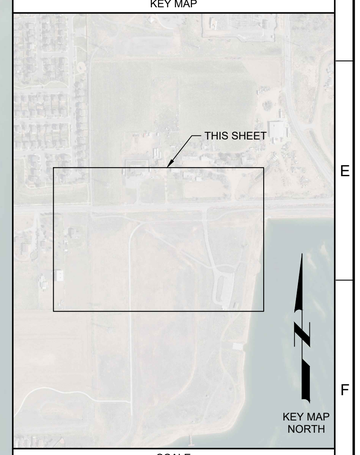

SCALE

0 25' 50' 100'

SCALE: 1" = 50' (HORIZ)

REV	DATE	BY	DESCRIPTION
			BID SET

DESIGNED CDH
DRAWN CDH
CHECKED JJK
DATE MAY 2026

COLORADO LICENSED
COURTNEY D. HUSTED
55165
Digitally signed by Courtney D. Husted
Date: 2026.05.04 10:40:40 -06'00'
PROFESSIONAL ENGINEER

carollo

THORNTON WATER PROJECT

CITY OF THORNTON - THORNTON WATER PROJECT

CHEMICAL BUILDING AND PRV VAULTS

CIVIL

LCC PRV SURVEY CONTROL PLAN

VERIFY SCALES
BAR IS ONE INCH ON ORIGINAL DRAWING
0 1"
IF NOT ONE INCH ON THIS SHEET, ADJUST SCALES ACCORDINGLY

JOB NO. 204403
DRAWING NO. 00GC04
SHEET NO. 11 OF 168

Plot Date: 5/4/2026 6:38:04 AM

LAST SAVED BY: CHusted

PROJECT NO. 200417-100000 FILE NAME: 204403_00GC04.dwg

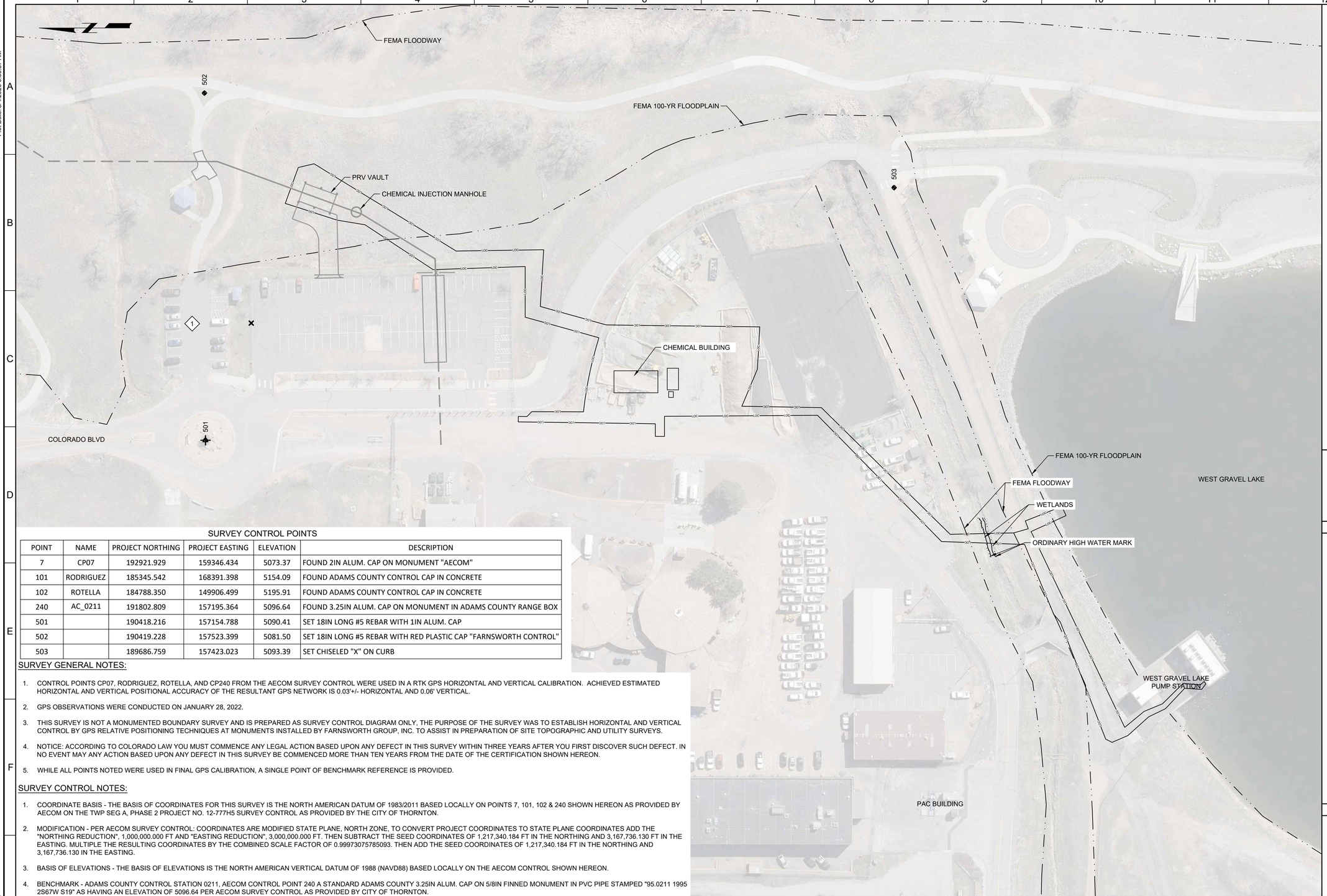

SURVEY CONTROL POINTS

POINT	NAME	PROJECT NORTHING	PROJECT EASTING	ELEVATION	DESCRIPTION
7	CP07	192921.929	159346.434	5073.37	FOUND 2IN ALUM. CAP ON MONUMENT "AECOM"
101	RODRIGUEZ	185345.542	168391.398	5154.09	FOUND ADAMS COUNTY CONTROL CAP IN CONCRETE
102	ROTELLA	184788.350	149906.499	5195.91	FOUND ADAMS COUNTY CONTROL CAP IN CONCRETE
240	AC_0211	191802.809	157195.364	5096.64	FOUND 3.25IN ALUM. CAP ON MONUMENT IN ADAMS COUNTY RANGE BOX
501		190418.216	157154.788	5090.41	SET 18IN LONG #5 REBAR WITH 1IN ALUM. CAP
502		190419.228	157523.399	5081.50	SET 18IN LONG #5 REBAR WITH RED PLASTIC CAP "FARNSWORTH CONTROL"
503		189686.759	157423.023	5093.39	SET CHISELED "X" ON CURB

SURVEY GENERAL NOTES:

1. CONTROL POINTS CP07, RODRIGUEZ, ROTELLA, AND CP240 FROM THE AECOM SURVEY CONTROL WERE USED IN A RTK GPS HORIZONTAL AND VERTICAL CALIBRATION. ACHIEVED ESTIMATED HORIZONTAL AND VERTICAL POSITIONAL ACCURACY OF THE RESULTANT GPS NETWORK IS 0.03'+/- HORIZONTAL AND 0.06' VERTICAL.
2. GPS OBSERVATIONS WERE CONDUCTED ON JANUARY 28, 2022.
3. THIS SURVEY IS NOT A MONUMENTED BOUNDARY SURVEY AND IS PREPARED AS SURVEY CONTROL DIAGRAM ONLY, THE PURPOSE OF THE SURVEY WAS TO ESTABLISH HORIZONTAL AND VERTICAL CONTROL BY GPS RELATIVE POSITIONING TECHNIQUES AT MONUMENTS INSTALLED BY FARNSWORTH GROUP, INC. TO ASSIST IN PREPARATION OF SITE TOPOGRAPHIC AND UTILITY SURVEYS.
4. NOTICE: ACCORDING TO COLORADO LAW YOU MUST COMMENCE ANY LEGAL ACTION BASED UPON ANY DEFECT IN THIS SURVEY WITHIN THREE YEARS AFTER YOU FIRST DISCOVER SUCH DEFECT. IN NO EVENT MAY ANY ACTION BASED UPON ANY DEFECT IN THIS SURVEY BE COMMENCED MORE THAN TEN YEARS FROM THE DATE OF THE CERTIFICATION SHOWN HEREON.
5. WHILE ALL POINTS NOTED WERE USED IN FINAL GPS CALIBRATION, A SINGLE POINT OF BENCHMARK REFERENCE IS PROVIDED.

SURVEY CONTROL NOTES:

1. COORDINATE BASIS - THE BASIS OF COORDINATES FOR THIS SURVEY IS THE NORTH AMERICAN DATUM OF 1983/2011 BASED LOCALLY ON POINTS 7, 101, 102 & 240 SHOWN HEREON AS PROVIDED BY AECOM ON THE TWP SEG A, PHASE 2 PROJECT NO. 12-777H5 SURVEY CONTROL AS PROVIDED BY THE CITY OF THORNTON.
2. MODIFICATION - PER AECOM SURVEY CONTROL: COORDINATES ARE MODIFIED STATE PLANE, NORTH ZONE, TO CONVERT PROJECT COORDINATES TO STATE PLANE COORDINATES ADD THE "NORTHING REDUCTION", 1,000,000.000 FT AND "EASTING REDUCTION", 3,000,000.000 FT. THEN SUBTRACT THE SEED COORDINATES OF 1,217,340.184 FT IN THE NORTHING AND 3,167,736.130 FT IN THE EASTING. MULTIPLE THE RESULTING COORDINATES BY THE COMBINED SCALE FACTOR OF 0.99973075785093. THEN ADD THE SEED COORDINATES OF 1,217,340.184 FT IN THE NORTHING AND 3,167,736.130 IN THE EASTING.
3. BASIS OF ELEVATIONS - THE BASIS OF ELEVATIONS IS THE NORTH AMERICAN VERTICAL DATUM OF 1988 (NAVD88) BASED LOCALLY ON THE AECOM CONTROL SHOWN HEREON.
4. BENCHMARK - ADAMS COUNTY CONTROL STATION 0211, AECOM CONTROL POINT 240 A STANDARD ADAMS COUNTY 3.25IN ALUM. CAP ON 5/8IN FINNED MONUMENT IN PVC PIPE STAMPED "95.0211 1995 2S67W S19" AS HAVING AN ELEVATION OF 5096.64 PER AECOM SURVEY CONTROL AS PROVIDED BY CITY OF THORNTON.

GENERAL NOTES:

1. BASIS OF SURVEY: NAD 1983/2011 AND NAVD88.

KEY NOTES:

1. PARKING LOT SHALL NOT BE USED FOR CONSTRUCTION PARKING.

Know what's below. Call before you dig.

Call before you Overhead

KEY MAP

KEY MAP NORTH

SCALE

0 25' 50' 100'

SCALE: 1" = 50' (HORIZ)

REV	DATE	BY	DESCRIPTION
			BID SET

DESIGNED CDH
DRAWN CDH
CHECKED JJK
DATE MAY 2026

COLORADO LICENSED PROFESSIONAL ENGINEER 55165 Digitally signed by Courtney D. Hunter Date: 2026.04.15 10:31:00-06'00' PROFESSIONAL ENGINEER

carollo

THORNTON WATER PROJECT

CITY OF THORNTON - THORNTON WATER PROJECT

CHEMICAL BUILDING AND PRV VAULTS

CIVIL

CHEMICAL BUILDING SURVEY CONTROL PLAN

VERIFY SCALES
BAR IS ONE INCH ON ORIGINAL DRAWING
0 1"
IF NOT ONE INCH ON THIS SHEET, ADJUST SCALES ACCORDINGLY

JOB NO. 204403
DRAWING NO. 00GC05
SHEET NO. 12 OF 168

Plot Date: 5/4/2026 6:38:37 AM

LAST SAVED BY: CHusted

PROJECT NO. 200417-100000 FILE NAME: 204403_00GC05.dwg

Plot Date: 30-APR-2026 8:51:51 AM
User: svcPW
PlotScale: 1:1
DesignScript: Carollo_Std_Pen_v0905.pen
ColorTable: gshade.ctb
Model: Layout1
LAST SAVED BY: JBaumbarger

GENERAL NOTES:

1. USE STRUCTURAL DRAWINGS IN CONJUNCTION WITH PROJECT DRAWINGS BY OTHER DISCIPLINES AND WITH THE SPECIFICATIONS.

2. PRESENTATION CONVENTIONS FOR STRUCTURAL DRAWINGS:

   A. SCREENED LINE WORK INDICATES EXISTING CONDITIONS.
   B. WRITTEN DIMENSIONS TAKE PRECEDENCE OVER SCALED SIZES.
   C. PLANS ARE TREATED AS HORIZONTAL SECTIONS. (I.E.: "PLAN AT ELEVATION 110" SHOWS CONSTRUCTION AT AND BELOW ELEVATION 110.)

3. VERIFY DIMENSIONS AND CONDITIONS BEFORE BEGINNING WORK. ADVISE ENGINEER AND THORNTON REPRESENTATIVE IMMEDIATELY OF DISCREPANCIES BETWEEN EXISTING CONDITIONS AND DIMENSIONS, AND INFORMATION SHOWN ON THESE DRAWINGS. CONFIRM THE FOLLOWING BEFORE PREPARATION AND SUBMITTAL OF SHOP DRAWINGS:

   A. DIMENSIONS AND WEIGHTS FOR EQUIPMENT SELECTED.
   B. SIZES AND LOCATIONS OF EQUIPMENT PADS FOR EQUIPMENT SELECTED.

4. TYPICAL DETAILS ARE INCLUDED ON THE "TS" DRAWINGS.

   A. TYPICAL DETAILS ARE INTENDED TO APPLY AT LOCATIONS DESCRIBED BY THEIR TITLES, EVEN WHEN NOT SPECIFICALLY REFERENCED ON THE DRAWINGS.
   B. IN STRUCTURAL TYPICAL DETAILS, ORIENTATION OF BARS IN EACH MAT OF REINFORCEMENT (WHETHER "LINES" OR "DOTS"ARE CLOSER TO THE FACE OF THE CONCRETE) IS GENERALLY ARBITRARY. SEE DRAWINGS OF EACH STRUCTURE FOR ORIENTATION REQUIRED AT THAT STRUCTURE.

5. SEE CIVIL DRAWINGS FOR STRUCTURE COORDINATES.

6. DRAWINGS PREPARED BY OTHER DISCIPLINES INCLUDE OPENINGS, ANCHORS, PIPES, CONDUITS, AND OTHER ITEMS THAT ARE EMBEDDED INTO OR PASS THROUGH STRUCTURES.

   A. CONFIRM SIZE AND LOCATIONS OF OPENINGS, PENETRATIONS AND EMBEDMENT FOR ITEMS AND EQUIPMENT FURNISHED.
   B. IN GENERAL, OPENINGS, EMBEDMENTS, AND PENETRATIONS LESS THAN 12 INCHES IN DIAMETER ARE NOT SHOWN ON THE STRUCTURAL DRAWINGS.
   C. SEE MECHANICAL DRAWINGS FOR DETAILS OF PIPE PENETRATIONS, PIPE SUPPORTS, AND ASSOCIATED STRUCTURAL REQUIREMENTS.
   D. SEE MECHANICAL DRAWINGS FOR EQUIPMENT PADS AND PIPE SUPPORTS.

STRUCTURAL DESIGN CRITERIA - GENERAL:

SEE DRAWINGS OF INDIVIDUAL STRUCTURES FOR SPECIFIC DESIGN CRITERIA BASED ON THESE OVERALL CRITERIA FOR THE SITE.

1. BUILDING CODE:

   A. SEE PLANS FOR EACH STRUCTURE.

2. STRUCTURE RISK CATEGORY: SEE PLANS FOR EACH STRUCTURE.

3. DEAD LOADS: CALCULATED FOR STRUCTURE SELF-WEIGHT.

4. CONSTRUCTION LOADS:
   STRUCTURES HAVE BEEN DESIGNED FOR OPERATING LOADS ON COMPLETED FACILITIES. UNTIL CONSTRUCTION IS COMPLETE AND MEMBERS HAVE ACHIEVED THEIR DESIGN STRENGTH, PROTECT STRUCTURES AS REQUIRED BY SHORING, BRACING, AND BALANCING.

GEOTECHNICAL REPORT / FOUNDATION DESIGN CRITERIA:

1. GEOTECHNICAL INVESTIGATION REPORT:

   TITLE: TWP SEGMENT A PRV & METER PIPE & VAULT & CHEMICAL BUILDING - GEOTECHNICAL DESIGN MEMORANDUM FINAL
   PREPARED BY: GEI CONSULTANTS.
   REPORT NO: 21207 DATED: 2-10-23. ADDENDUM: 04-20-2026

2. FOUNDATION DESIGNS ARE BASED ON RECOMMENDATIONS IN THE GEOTECHNICAL INVESTIGATION REPORT.

   A. NET ALLOWABLE BEARING PRESSURE SEE PLANS.

   B. FROST DEPTH: 36"

   C. LATERAL EARTH PRESSURE (UNO):
   SURCHARGE: EQUIVALENT TO 2 FEET OF SOIL ABOVE FINISHED GRADE.

	STATIC (ABOVE GWT)	STATIC (BELOW GWT)
ACTIVE (PSF/FT):	42	83
AT REST (PSF/FT):	63	94
PASSIVE (PSF/FT):	375	250
SLIDING COEFFICIENT OF FRICTION:	0.4	0.4

   D. GROUNDWATER EL 5092 (CHEMICAL BUILDING) & 5087 (LCC VAULT).

TYPICAL STRUCTURAL MATERIALS:

1. MATERIALS SHALL CONFORM TO THE FOLLOWING REQUIREMENTS UNLESS OTHERWISE INDICATED ON THE DRAWINGS.

2. SEE PROJECT SPECIFICATIONS AND NOTES ON DRAWINGS OF SPECIFIC STRUCTURES FOR DETAILED AND LOCATION-SPECIFIC REQUIREMENTS.

REINFORCING STEEL (FOR CONCRETE):

1. DEFORMED BARS:
   A. TYPICAL: ASTM A 615, GRADE 60.
   B. WHERE INDICATED ON THE DRAWINGS: ASTM A 706.

2. WELDED WIRE FABRIC: ASTM A 1064.

3. PRESTRESSING STRANDS: ASTM A 416, 270 KSI YIELD STRENGTH, 7-WIRE.

4. HORIZ JOINT REINF (FOR MASONRY: ASTM A 951, 3/16"DIA x 2 RODS), GALV.

CONCRETE:

1. NORMAL DENSITY.

2. MINIMUM SPECIFIED CONCRETE COMPRESSIVE STRENGTH, f'c (AT 28 DAYS UNO).

   A. STRUCTURES: "CLASS A" f'c = 4500 PSI.
   B. FILL AND THRUST BLOCKS: "CLASS C" f'c = 2500 PSI.
   C. PIPE ENCASEMENT: "CLASS A" f'c = 4500PSI.
   D. ELECTRICAL DUCT ENCASEMENT: "CLASS CE" f'c = 2500 PSI.
   E. FLOW FILL: REMOVABLE FLOW FILL PER CDOT STANDARDS

MASONRY:

1. CONCRETE MASONRY.

   A. UNITS: ASTM C 90, NORMAL WEIGHT.
   B. MORTAR: ASTM C 270, MINIMUM 28-DAY COMPRESSIVE STRENGTH = 1800 PSI.
   C. GROUT: ASTM C 476, MINIMUM 28-DAY COMPRESSIVE STRENGTH = 2000 PSI.
   D. MINIMUM SPECIFIED COMPRESSIVE STRENGTH, f'm (AT 28 DAYS).
      1) SOLID GROUTED: f'm = 2000 PSI.

STRUCTURAL STEEL:

1. SECTIONS

   A. SHAPES W, WT: ASTM A 992 (Fy = 50 KSI)
   B. SHAPES S, ST, M, MT, HP, C, MC, L: ASTM A 36 (Fy = 36 KSI)
   C. PLATES AND BARS: ASTM A 36 (Fy = 36 KSI)
   D. PIPES: ASTM A 53, GRADE B (Fy = 35 KSI)
   E. HOLLOW STRUCTURAL SECTIONS:
      ROUND: ASTM A 500, GRADE B (Fy = 42 KSI)
      SQUARE AND RECTANGULAR: ASTM A 500, GRADE B (Fy = 46 KSI)

2. CONNECTIONS:

   A. BOLTS - STEEL TO-STEEL:
      ASTM F 3125 GRADE A325 HIGH-STRENGTH BOLTS, WITH LOAD INDICATOR WASHERS.
   B. BOLTS - STEEL TO CONCRETE OR MASONRY:
      ANCHOR BOLTS WITH HEX FORGED HEAD.
      ASTM F 593, STAINLESS TYPE 316 (304)
      ASTM F 1554, GRADE 36 GALVANIZED.
   C. WELDS - SHIELDED METAL ARC PROCESS USING E70-XX ELECTRODES.

STAINLESS STEEL:

1. ANSI TYPE 316/316L EXCEPT WHERE TYPE 304/304L IS INDICATED ON THE DRAWINGS.

2. SECTIONS: SHAPES AND BARS: ASTM A 276.

3. BOLTED CONNECTIONS - BOLTS AND ANCHOR BOLTS:

   A. MATCH ALLOY OF THE STRUCTURAL MEMBERS CONNECTED.
   B. TYPE 316/316L: ASTM F 593, GRADE B8M, CLASS 1, HEAVY HEX.
   C. TYPE 304/304L: ASTM F 593, GRADE B8, CLASS 1, HEAVY HEX.

4. WELDED CONNECTIONS:

   A. TYPE 316L: E316L-15 ELECTRODES.
   B. TYPE 304L: E304L-15 ELECTRODES.

STRUCTURAL ALUMINUM:

1. SECTIONS

   A. SHAPES: ASTM B 308, ALLOY 6061-T6.
   B. SHEET AND PLATE: ASTM B 209, ALLOY 6061-T6.

2. BOLTED CONNECTIONS - BOLTS AND ANCHOR BOLTS:

   A. STAINLESS STEEL - TYPE 316, ASTM F 593, GRADE B8M, CLASS 1, HEAVY HEX.

3. WELDED CONNECTIONS:

   A. GAS METAL ARC (MIG) OR GAS TUNGSTEN ARC (TIG) PROCESS USING FILLER ALLOY 4043 ELECTRODES.

CONSTRUCTION:

CONFORM TO THE FOLLOWING REQUIREMENTS UNLESS OTHERWISE INDICATED ON THE DRAWINGS.

EXCAVATION AND BACKFILLING:

1. EXPOSE AND PREPARE SUBGRADE AS SHOWN ON THE DRAWINGS AND SPECIFIED. OBTAIN ENGINEER'S OBSERVATION OF SUBGRADE SURFACES, AS EXPOSED AND AS PREPARED, BEFORE PROCEEDING WITH FOUNDATION CONSTRUCTION.

2. DO NOT PLACE BACKFILL AGAINST WALLS UNTIL STRUCTURES SUPPORTING THE TOP OF THE WALL ARE IN PLACE, ARE COMPLETE, AND (IN THE CASE OF CONCRETE) HAVE CURED TO THEIR MINIMUM SPECIFIED 28-DAY COMPRESSIVE STRENGTH.

3. WHERE BACKFILL MUST BE PLACED AGAINST WALLS BEFORE STRUCTURES ABOVE ARE COMPLETE, PROVIDE BRACING FOR WALLS. KEEP BRACING IN PLACE UNTIL THE STRUCTURE ABOVE IS COMPLETE AND (IN THE CASE OF CONCRETE) HAS CURED TO ITS MINIMUM SPECIFIED 28-DAY COMPRESSIVE STRENGTH.

CONCRETE:

1. SEE S101/TYP FOR CONCRETE NOTES, INCLUDING CLEAR COVER AND LAP SPLICE LENGTH REQUIREMENTS FOR REINFORCING.

2. SUBMIT LOCATIONS OF CONSTRUCTION JOINTS NOT SHOWN ON THE DRAWINGS FOR ACCEPTANCE BY THE ENGINEER BEFORE FORM LAYOUT.

3. PROVIDE CHAMFER AT EXPOSED EDGES OF CAST-IN-PLACE CONCRETE. SEE SPECIFICATION 03_11_07 FOR CHAMFERS.

4. PROVIDE REINFORCING:

   A. AT CORNERS AND JUNCTIONS - AS INDICATED IN S144/TYP, SUPPLEMENT WITH ADDED BARS WHERE INDICATED ON THE DRAWINGS.
   B. AT OPENINGS - AS INDICATED IN S180/TYP.

5. WELDING OF REINFORCING IS NOT PERMITTED UNLESS DETAILED ON THE DRAWINGS OR ACCEPTED IN ADVANCE BY THE ENGINEER.

6. MAINTAIN MINIMUM 3 INCHES CLEAR CONCRETE COVER BETWEEN REINFORCING AND EMBEDMENTS.

7. FINISH CONCRETE AS SPECIFIED IN SECTION 03_35_29.

8. CONCRETE PADS

   A. (E) EQUIPMENT PAD SEE S302/TYP.

   B. (H) HOUSEKEEPING PAD FOR ELECTRICAL EQUIPMENT SEE S350/TYP.

MASONRY:

1. SEE S400/TYP FOR MASONRY NOTES, INCLUDING LAP SPLICE LENGTHS.

2. PROVIDE REINFORCING:

   A. AT CORNERS AND JUNCTIONS AS INDICATED IN S412/TYP.
   B. AT OPENINGS AS INDICATED IN S410/TYP.

3. WELDING OF REINFORCING IS NOT PERMITTED UNLESS DETAILED ON THE DRAWINGS OR ACCEPTED IN ADVANCE BY THE THORNTON REPRESENTATIVE AND ENGINEER.

4. GROUTING:

   A. FULLY GROUTED.

STEEL, STAINLESS STEEL, AND ALUMINUM - CONNECTIONS:

1. BOLTED:

   A. MADE USING 3/4-INCH DIAMETER BOLTS.
   B. HAVING A MINIMUM OF 2 BOLTS, SPACED NOT CLOSER THAN 3 INCHES ON CENTER.
   C. WITH A DISTANCE OF AT LEAST 1 1/2 INCHES FROM CENTER OF BOLT TO ANY EDGE OF A PLATE OR STRUCTURAL ELEMENT.

2. WELDED:

   A. FILLET WELDS: PER AWS CODE BASED ON THE THICKNESS OF THE MATERIALS BEING JOINED, AND FULL LENGTH OF THE JOINT.

3. INTERFACE BETWEEN MATERIALS:

   A. AT BOLTED CONNECTIONS THAT INCLUDE DIFFERENT METALS (E.G.: STEEL AND STAINLESS STEEL, OR ALUMINUM AND STEEL) PROVIDE ISOLATING SLEEVES AND WASHERS AS SPECIFIED IN SECTION 05_05_24.
   B. WHERE ALUMINUM IS IN CONTACT WITH MASONRY OR CONCRETE, COAT ALUMINUM SURFACES AS SPECIFIED IN SECTION 09_96_01.

4. POST-INSTALLED ANCHORS IN CONCRETE AND MASONRY:

   A. INSTALL IN FULL COMPLIANCE WITH ACCEPTED BUILDING CODE EVALUATION REPORT AND MANUFACTURER'S INSTRUCTIONS.
   B. DO NOT CUT, DAMAGE, OR INTERRUPT EXISTING REINFORCEMENT TO INSTALL ANCHORS. USE NON-DESTRUCTIVE TESTING EQUIPMENT TO IDENTIFY LOCATIONS OF REINFORCEMENT IN MEMBERS BEFORE DRILLING HOLES FOR ANCHORS.
   C. MECHANICAL ANCHORS NOT ALLOWED

METAL FABRICATIONS:

1. HANDRAILS AND GUARDRAILS:

   A. ALUMINUM, EXCEPT WHERE OTHER MATERIALS ARE NOTED.

2. GRATING:

   A. ALUMINUM OR FIBERGLASS WITH TYPE 316 STAINLESS STEEL FASTENERS, UNLESS OTHERWISE NOTED.
   B. GRATING AND ITS SEATS OR SUPPORTS SHALL BE OF THE SAME MATERIAL.
   C. UNLESS INDICATED ON THE DRAWINGS AS "REMOVABLE GRATING", SECURELY FASTEN GRATING TO SUPPORTS AS INDICATED IN S559/TYP.

3. COVER PLATES:

   A. ALUMINUM WITH TYPE 316 STAINLESS STEEL FASTENERS, UNLESS OTHERWISE NOTED.
   B. COVER PLATE AND ITS SEATS OR SUPPORTS SHALL BE OF THE SAME MATERIAL.

SPECIAL INSPECTION:

1. SPECIAL INSPECTION IS REQUIRED FOR THE FOLLOWING STRUCTURAL MATERIALS AND CONSTRUCTION. SEE SPECIFICATION SECTION 01_45_24 FOR DETAILS.

2. DIVISION 31 SITE CONSTRUCTION (EARTHWORK)

   A. EXCAVATION DEPTH.
   B. ADEQUACY OF EXPOSED SURFACE TO PROVIDE REQUIRED SUPPORT.
   C. PREPARATION OF SOILS/SURFACES SUPPORTING CONSTRUCTION.
   D. FILL AND BACKFILL.
   E. DEEP FOUNDATIONS: DRILLED PIERS.

3. DIVISION 03 CONCRETE:

   A. LOCATIONS.
   B. FORMWORK AND MEMBER SIZES.
   C. REINFORCING STEEL.
   D. ANCHORS: CAST-IN AND POST-INSTALLED.
   E. CONCRETE MIX AND PLACEMENT.
   F. PROTECTION AND CURING PROCEDURES.
   G. PRESTRESSED CONCRETE.
   H. PRECAST CONCRETE.

4. DIVISION 04 MASONRY

   A. LOCATIONS.
   B. MEMBER SIZES.
   C. REINFORCING STEEL.
   D. ANCHORS: BUILT-IN AND POST-INSTALLED.
   E. MORTAR AND JOINTS.
   F. GROUT AND GROUTING.
   G. PROTECTION AND CURING PROCEDURES.

5. DIVISION 05 METALS

   A. GENERAL ALL METALS:
      1) MEMBER LOCATIONS.
      2) MEMBER SIZES/TYPES.
      3) ANCHORS - CAST-IN AND BUILT-IN ANCHOR BOLTS.
      4) ANCHORS - POST-INSTALLED MECHANICAL AND ADHESIVE.

   B. STRUCTURAL STEEL (CARBON AND STAINLESS).
      1) HIGH-STRENGTH BOLTING.
      2) WELDING.

   C. STRUCTURAL ALUMINUM.
      1) BOLTING.
      2) WELDING.

6. DIVISION 06 WOOD, PLASTICS AND COMPOSITES.

STRUCTURAL OBSERVATION:

1. STRUCTURAL OBSERVATION IS REQUIRED DURING AND AT SPECIFIC STAGES OF CONSTRUCTION. SEE SPECIFICATION SECTION 01_45_24 FOR DETAILS.

STRUCTURAL SYMBOLS:

1. SEE DRAWING 00G04 FOR KEY TO DRAWING TITLES AND SECTION CUTS.

2. WELDING: SYMBOLS: IN ACCORDANCE WITH AMERICAN WELDING SOCIETY (AWS) A2.4.

STRUCTURAL ABBREVIATIONS:

1. SEE DRAWING 00G05 FOR GENERAL LIST OF ABBREVIATIONS USED ON DRAWINGS.

2. ABBREVIATIONS FOR NAMES OF TECHNICAL GROUPS MAY BE FOUND IN THE PROJECT SPECIFICATIONS.

3. STRUCTURAL MEMBERS:

   A. STEEL: ABBREVIATIONS AND DESIGNATIONS ARE IN ACCORDANCE WITH THE AMERICAN INSTITUTE OF STEEL CONSTRUCTION'S STEEL CONSTRUCTION MANUAL, CURRENT EDITION.

   B. ALUMINUM: ABBREVIATIONS AND DESIGNATIONS ARE IN ACCORDANCE WITH THE ALUMINUM ASSOCIATION'S ALUMINUM DESIGN MANUAL, CURRENT EDITION.

4. ABBREVIATIONS FOR STRUCTURAL DRAWINGS:
   WHEN USED ON THE STRUCTURAL DRAWINGS, THE FOLLOWING ABBREVIATIONS HAVE THE MEANINGS LISTED.

REINFORCEMENT:		OTHER:	
BO	BOTTOM OF	L	ANGLE
EF	EACH FACE	PL	PLATE
I.F.	INSIDE FACE		
O.F.	OUTSIDE FACE		
T.O.	TOP OF		
#	NUMBER (REINFORCING BAR SIZE)		

DEFERRED DESIGN SUBMITTALS:

AS DEFINED IN THE BUILDING CODE, DEFERRED DESIGN SUBMITTALS ARE PORTIONS OF THE DESIGN THAT ARE NOT SUBMITTED AT THE TIME OF PERMIT APPLICATION, AND THAT ARE TO BE REVIEWED BY THE REGISTERED DESIGN PROFESSIONAL AND SUBSEQUENTLY SUBMITTED TO THE BUILDING OFFICIAL.

DEFERRED DESIGN SUBMITTALS FOR THIS PROJECT INCLUDE:

1. DIVISION 31 SITE CONSTRUCTION (EARTHWORK).

   A. 31_00_00 - EARTHWORK.
   B. 31_05_15 - SOILS AND AGGREGATES FOR EARTHWORK.

2. DIVISION 03 CONCRETE.

   A. 03_30_00 - CAST-IN-PLACE CONCRETE.
   B. 03_41_41 - PRECAST CONCRETE ROOF AND WALL PANELS.

3. DIVISION 06 WOOD, PLASTICS, AND COMPOSITES.

   A. 06_80_15 FRP BEAMS.
   B. 06_80_17 FRP GRATING.
   C. 06_81_03 FRP HANDRAILS AND GUARDRAILS.

REV	DATE	BY	DESCRIPTION
			BID SET

DESIGNED CE
DRAWN CE
CHECKED MAK
DATE MAY 2026

COLORADO REGISTERED MARK ALAN WELLS 34300 PROFESSIONAL ENGINEER

CITY OF THORNTON - THORNTON WATER PROJECT
CHEMICAL BUILDING AND PRV VAULTS
GENERAL
STRUCTURAL NOTES

VERIFY SCALES
BAR IS ONE INCH ON ORIGINAL DRAWING
0 1"
IF NOT ONE INCH ON THIS SHEET, ADJUST SCALES ACCORDINGLY

JOB NO. 204403
DRAWING NO. 00GS01
SHEET NO. 13 OF 168

PROJECT NO. 204403-100000 FILE NAME: 204403_00GS01.dgn

PIPING SYMBOLS

DOUBLE LINE	SINGLE LINE	DESCRIPTION
		WELDED JOINT
		GROOVED END JOINT
		FLANGED JOINT
		HUB & SPIGOT JOINT (RUBBER GASKET)
		PUSH-ON JOINT (RESTRAINED)
		ADAPTER SIDE GROOVED END ADAPTER FLANGE
		FLANGED COUPLING ADAPTER
		FLANGED COUPLING ADAPTER WITH THRUST TIES
		FLEXIBLE COUPLING
		FLEXIBLE COUPLING WITH THRUST TIES
		METAL BELLOWS EXP JOINT
		ELASTOMER BELLOWS EXP JOINT
		FLEXIBLE COUPLING ADAPTER
		DISMANTLING JOINT
		EXPANSION COMPENSATOR
		ELBOW UP
		ELBOW DOWN
		TEE UP
		TEE DOWN
		LATERAL UP
		LATERAL DOWN
		CONCENTRIC REDUCER
		ECCENTRIC REDUCER (FOT. FOB)
		UNION
		CAP
		ANCHOR
		ELBOW, 90 DEGREE
		CROSS
		TEE
		ELBOW, 45 DEGREE
		ELBOW, 22.5 DEGREE
		ELBOW, 11.25 DEGREE
		LATERAL

DOUBLE LINE	SINGLE LINE	DESCRIPTION
		GATE VALVE
	K	KNIFE GATE VALVE
		BUTTERFLY VALVE
V	V	CHARACTERIZED BALL CONTROL VALVE
		BALL VALVE
		GLOBE VALVE
		3-WAY GLOBE TYPE MIXING VALVE
		FOUR WAY VALVE
		DIAPHRAGM VALVE
		PLUG VALVE
		LUBRICATED PLUG VALVE
		ECCENTRIC PLUG VALVE
		CONCENTRIC PLUG VALVE
		SWING CHECK VALVE
		WAFER CHECK VALVE
		PINCH VALVE
		BALL CHECK VALVE
		DUAL CHECK VALVE
		SILENT CHECK VALVE
		MUD VALVE (PLAN VIEW)
		NEEDLE VALVE
		CHECK BACKFLOW PREVENTER
		PIPE MATERIAL CHANGE

MECHANICAL SYMBOLS

SINGLE LINE	DESCRIPTION
	AIR OR CHEMICAL DIFFUSER
	QUICK DISCONNECT HIGH PRESSURE AIR OR FLUSHING
	BATCHMETER
	AIR VENT
	BASKET STRAINER
	BLOWER
	CALIBRATION COLUMN
	COMPRESSOR/TURBINE
	COMPRESSOR: RECIPROCATING
	DIAPHRAGM SEAL
	DRAIN
	EJECTOR OR EDUCTOR
M	ELECTRIC MOTOR
	EQUIPMENT DRAIN
	EXPANSION JOINT, FLEXIBLE VIBRATION JOINT
	FAN: EXHAUST/SUPPLY
	FILTER
	FIRE HYDRANT
	FLAME ARRESTER
	FLAME ARRESTER WITH THERMALLY OPERATED VALVE
	FLOOR DRAIN
	FLOW SWITCH
	GAUGE: PRESSURE
	GAUGE: DIFFERENTIAL PRESSURE
	WEIR
	MIXER
	OIL OR MOISTURE TRAP
	PRIMARY LEVEL ELEMENT: BUBBLER
	PRIMARY LEVEL ELEMENT: ELECTRODE
	PRIMARY LEVEL ELEMENT: FLOAT SWITCH
	PRIMARY LEVEL ELEMENT: FLUID
	PRIMARY LEVEL ELEMENT: INVERTED COLUMN

SINGLE LINE	DESCRIPTION
	PRIMARY LEVEL ELEMENT: RADAR
	PRIMARY LEVEL ELEMENT: ULTRASONIC
	PRIMARY FLOW ELEMENT: FLUME
X	PRIMARY FLOW ELEMENT: X = C - CORIOLIS X = M - MAGNETIC X = P - PROPELLER X = PT - PITOT TUBE X = R - ROTAMETER X = T - TURBINE X = TH - THERMAL X = U - ULTRASONIC X = D - DENSITY
	PRIMARY FLOW ELEMENT: ORIFICE PLATE
	PRIMARY FLOW ELEMENT: VENTURI TUBE
	PRIMARY FLOW ELEMENT: WEIR
	PULSATION DAMPENER
	PUMP: CENTRIFUGAL
	PUMP: DIAPHRAGM
	PUMP: METERING
	PUMP: PLUNGER
	PUMP: PERISTALTIC TUBE METERING
	PUMP: PROGRESSIVE CAVITY
	PUMP: RECIPROCATING
	PUMP: ROTARY
	PUMP: SCREW
	PUMP: SUBMERSIBLE
	PUMP: VERTICAL LIFT
	PIPE REDUCER: CONCENTRIC
	PIPE REDUCER: ECCENTRIC (FOT, FOB)
	ROTARY CHEMICAL FEEDER
	RUPTURE DISK
	SAMPLE PORT
	SIGHT GLASS
	SLIDE GATE
	SLUICE GATE
	STRAINER: WYE TYPE

SINGLE LINE	DESCRIPTION
	STRAINER: WYE TYPE WITH BLOWOFF
	THERMOMETER
	VALVE: ANGLE
	VALVE: AIR RELIEF
	VALVE: CONE
	VALVE: FLAPPER CHECK
	VALVE: FOUR WAY
	VALVE: HOSE
	VALVE: PLUG CONCENTRIC
	VALVE: PRESSURE RELIEF PRESSURE-REDUCING REGULATOR
	VALVE: TELESCOPING
	VALVE: THREE WAY AIR OPERATED
M	VALVE: THREE WAY MOTOR OPERATED
S	VALVE: THREE WAY SOLENOID OPERATED
	VALVE: VACUUM
	BACKPRESSURE REGULATOR SELF-CONTAINED
	BACKPRESSURE REGULATOR W/ EXTERNAL PRESSURE TAP
	PRESSURE-REDUCING REGULATOR: SELF-CONTAINED
	PRESSURE-REDUCING REGULATOR W/EXTERNAL PRESSURE TAP

IDENTIFICATION SYMBOLS

CHEMICAL INJECTION POINT — CHEMICAL / DWG NO.

PIPE DESIGNATOR — PIPE SIZE, FLOW STREAM, X" XXX (E) or (F)
SIZE FLOW STREAM
(E) = EXISTING FLOW STREAM
(F) = FUTURE FLOW STREAM

CONTINUATION TAG — UNIQUE IDENTIFIER, CONTINUATION FROM DWG NO., CONTINUATION TO DWG NO., A, B, C

EQUIPMENT / VALVE TAG — XXX-XX-XXXX (E) or (F)
EQUIPMENT
(E) = EXISTING EQUIPMENT
(F) = FUTURE EQUIPMENT

KEY TAG — X

LINE SYMBOLS

PIPE ABOVE OR BELOW GROUND

PIPE UNDERNEATH SLAB OR STRUCTURE

FUTURE

EXISTING

DEMO

PROCESS LINE SYMBOLS

PRIMARY PROCESS FLOW IN PIPE

SECONDARY PROCESS FLOW IN PIPE

PRIMARY PROCESS FLOW IN CHANNEL

SECONDARY PROCESS FLOW IN CHANNEL

REV	DATE	BY	DESCRIPTION
			BID SET

DESIGNED SJH
DRAWN JAM
CHECKED
DATE MAY 2026

COLORADO LICENSED
57176
Steven J. Hall
PROFESSIONAL ENGINEER

carollo

THORNTON WATER PROJECT

CITY OF THORNTON - THORNTON WATER PROJECT
CHEMICAL BUILDING AND PRV VAULTS
MECHANICAL
GENERAL MECHANICAL LEGEND AND SYMBOLS

VERIFY SCALES
BAR IS ONE INCH ON ORIGINAL DRAWING
0 1"
IF NOT ONE INCH ON THIS SHEET, ADJUST SCALES ACCORDINGLY

JOB NO. 204403
DRAWING NO. 00GM01
SHEET NO. 14 OF 168

LAST SAVED BY: AEvans

PROJECT NO. 204403-100000 FILE NAME: 204403_00GM01.dwg

NOTES

1. SIZES OF EQUIPMENT PADS INDICATED ON THE DRAWINGS ARE APPROXIMATE. EXACT DIMENSIONS SHALL BE DETERMINED BY THE CONTRACTOR FOR THE EQUIPMENT FURNISHED. ALL FLOOR MOUNTED EQUIPMENT SHALL BE SET ON CONCRETE PADS CONFORMING TO DETAILS SHOWN ON THE TYPICAL STRUCTURAL DRAWINGS.
2. DIELECTRIC COUPLINGS, FLANGES OR UNIONS SHALL BE INSTALLED AT ALL CONNECTIONS OF COPPER PIPE TO OTHER TYPES OF METALLIC PIPING.
3. HVAC PIPING AND DUCTWORK DRAWINGS DO NOT SHOW ALL DRAINS, VENTS, OFFSETS AND FITTINGS ETC. REQUIRED FOR THE COMPLETE SYSTEM. SMALL PIPING IS SHOWN APPROXIMATELY TO SCALE BUT NOT EVERY FITTING AND OFFSET IS SHOWN. THE CONTRACTOR SHALL FURNISH, INSTALL AND TEST ALL HVAC SYSTEMS TO PROVIDE THE COMPLETE SYSTEM.
4. UNLESS OTHERWISE SHOWN ON THE DRAWINGS ALL FLOOR SLAB AND WALL PENETRATIONS SHALL BE AS SHOWN ON THE TYPICAL DETAILS.
5. NOT ALL AND ONLY CERTAIN TYPES OF SUPPORTS ARE SHOWN ON THE HVAC DRAWINGS. UNLESS OTHERWISE DETAILED ON THE DRAWINGS ALL PIPE AND DUCT SUPPORTS SHALL BE DESIGNED, FURNISHED AND INSTALLED BY THE CONTRACTOR AS SPECIFIED.
6. THIS IS A GENERAL LIST OF SYMBOLS. NOT ALL ITEMS SHOWN HERE APPEAR ON CONTRACT DRAWINGS.
7. TYPICAL DETAILS SHALL BE USED FOR ALL PERMANENT WORK EVEN THOUGH THEY ARE NOT CALLED OUT AT ALL LOCATIONS WHERE THEY APPLY.
8. COORDINATE FINAL LOUVER SIZE AND LOCATION WITH ARCHITECTURAL AND STRUCTURAL DRAWINGS.
9. PROVIDE TURNING VANES IN ALL ELBOWS. (SHOWN OR NOT)

ABBREVIATIONS

A	@	AT
	AC	AIR CONDITIONING
	AFF	ABOVE FINISHED FLOOR
	AFS	AIR FLOW SWITCH
	AHU	AIR HANDLING UNIT
B	BD	BALANCING DAMPER
	BDD	BACKDRAFT DAMPER
	BLR	BOILER
	BOD	BOTTOM OF DUCT
C	CH	CHILLER
	CO	CARBON MONOXIDE DETECTOR
	CT	COOLING TOWER
	CS	CURRENT SENSOR
	CU	CONDENSING UNIT
D	DG	DOOR GRILLE
	DP	DIFFERENTIAL PRESSURE
E	EA	EXHAUST AIR
	ECU	EVAPORATIVE COOLING UNIT
	EF	EXHAUST FAN
	EUH	ELECTRIC UNIT HEATER
F	FA	FOUL AIR
	FCU	FAN COIL UNIT
	FD	FIRE DAMPER
G	GUH	GAS UNIT HEATER
H	HP	HEAT PUMP
M	MAU	MAKEUP AIR UNIT
	MD	MOTORIZED DAMPER
N	NC	NORMALLY CLOSED
	NO	NORMALLY OPEN
O	OA	OUTSIDE AIR
	OCF	ODOR CONTROL FAN
P	PPU	POSITIVE PRESSURIZATION UNIT
R	RA	RETURN AIR
	RR	RETURN REGISTER OR GRILLE
S	SA	SUPPLY AIR
	SD	SMOKE DAMPER OR SMOKE DETECTOR
	SF	SUPPLY FAN
	SFD	SMOKE & FIRE DAMPER COMBINATION
	SR	SUPPLY REGISTER, GRILLE OR DIFFUSER
V	VAV	VARIABLE AIR VOLUME
W	WUH	WATER UNIT HEATER

DUCTWORK SYMBOLS

FEATURE	SYMBOL
DIRECTION OF FLOW	
DUCT SIZE- FIRST NUMBER IS SIDE SHOWN	12x20
ROUND DUCT	12 DIA OR 12"Ø
DUCT SECTION, POSITIVE PRESS FIRST NUMBER IS TOP	20x12
DUCT SECTION, NEGATIVE PRESS FIRST NUMBER IS TOP	20x12
SIDE MOUNT DEVICE	
ELEVATION CHANGE (R) RISE, (D) DROP	R
ACCESS DOOR	AD / AD
BOTTOM MOUNT DEVICE REGISTER, GRILLE, DIFFUSER OR DUCT TAKEOFF	
FLEXIBLE CONNECTION	
FLEXIBLE DUCT	OR
DUCT INSULATION (INSIDE) OR (OUTSIDE) SIZE VARIES	XX" INSULATION (INSIDE) / XX" INSULATION (OUTSIDE)
TURNING VANES	
RECTANGULAR TO RECTANGULAR TRANSITION	20x12 / 16x8
RECTANGULAR TO ROUND TRANSITION	20x12 / 16 DIA
POSITIVE PRESSURE DUCT - ELBOW TURNED UP (USE ONE DIAGONAL FOR NEGATIVE PRESSURE)	
POSITIVE PRESSURE DUCT - ELBOW TURNED DOWN (USE ONE DIAGONAL FOR NEGATIVE PRESSURE)	
SMOKE DETECTOR CONFIRM ORIENTATION OF INSTALLATION	

DAMPERS

BACKDRAFT	
BALANCING	
FIRE W/ ACCESS DOOR	FD
MOTORIZED	M
SMOKE CONFIRM ORIENTATION OF INSTALLATION	
COMBINATION SMOKE AND FIRE CONFIRM ORIENTATION OF INSTALLATION	

EQUIPMENT SYMBOLS

FEATURE	SYMBOL
A/C OR HEAT PUMP COMPRESSOR	
CENTRIFUGAL FAN	
CONTROL PANEL	
COOLING COIL	C / C
CURRENT SENSOR	CS
DIRECT EXPANSION COIL	D / X
DUCT SMOKE DETECTOR	
ELECTRIC HEATER	
FILTER	
AIR FLOW SWITCH	AFS
GAS HEATER	
HUMIDISTAT	H
INLINE/AXIAL FAN	
MOTOR OPERATED VALVE	M
PRESSURE DIFFERENTIAL SWITCH	PD
ROOF/SIDEWALL FAN	
ROOF VENT OR ROOF FAN	
SOLENOID VALVE	S
THERMOSTAT 60" ABOVE FINISH FLOOR	T
UNIT HEATER (HORIZONTAL TYPE)	
UNIT HEATER (VERTICAL TYPE)	

NOTE: THIS IS A GENERAL LIST OF SYMBOLS AND ABBREVIATIONS. NOT ALL ITEMS SHOWN HERE APPEAR ON THE CONTRACT DRAWINGS.

REGISTERS, GRILLES & LOUVERS SYMBOLS

FEATURE	SYMBOL
LOUVER/BRICK VENT - FIXED	
LOUVER/BRICK VENT - OPERABLE	
TRANSFER GRILLE	
TO SPACE	
FROM SPACE	
SUPPLY DIFFUSER OR GRILLE ARROWS INDICATE FLOW DIRECTION	
RETURN DIFFUSER OR GRILLE ARROWS INDICATE FLOW DIRECTION	
EXHAUST DIFFUSER OR GRILLE ARROWS INDICATE FLOW DIRECTION	

LEGEND FOR REGISTERS & GRILLES

TYPE OF REGISTER OR GRILLE (AS DESCRIBED IN SPECIFICATIONS) — BOOT (IF REQ'D) — NECK SIZE

SR-1(B)/12x12

400/4

CFM — FLOW PATTERN; SIDEWALL-ADJUSTABLE; C-CORNER

	SUPPLY	RETURN	EXHAUST
DUCT THRU ROOF OR FLOOR			
DUCT UP			
DUCT DOWN			

REV	DATE	BY	DESCRIPTION

BID SET

DESIGNED WJS
DRAWN MSA
CHECKED CAG
DATE MAY 2026

COLORADO LICENSED
CHAD A. GILES
0050567
Digitally signed by Chad A. Giles
Email Info: Carollo Engineers
Date: 2026.03.06 13:21:47 -07'00'
PROFESSIONAL ENGINEER

carollo®

THORNTON WATER PROJECT

CITY OF THORNTON - THORNTON WATER PROJECT

CHEMICAL BUILDING AND PRV VAULTS

GENERAL

HVAC NOTES, ABBREVIATIONS, AND SYMBOLS

VERIFY SCALES
BAR IS ONE INCH ON ORIGINAL DRAWING
0 — 1"
IF NOT ONE INCH ON THIS SHEET, ADJUST SCALES ACCORDINGLY

JOB NO. 204403
DRAWING NO. 00GH01
SHEET NO. 15 OF 168

PROJECT NO. 204403-100000 FILE NAME: 204403_00GH01.dgn

Plot Date: 26-MAR-2026 6:33:55 AM
User: svcPW
PlotScale: 1:1
DesignScript: Carollo_Std_Pen_v0905.pen
ColorTable: gshade.ctb
Model: Layout1
LAST SAVED BY: chernandez

AIR CONDITIONING / HEAT PUMP SCHEDULE

EQUIPMENT TAG	AREA SERVED	AIRFLOW (CFM)	ESP (IN. W.C.)	COOLING DATA				HEATING DATA				FILTER DATA		ELECTRICAL DATA			BASIS OF DESIGN	NOTES
				OA DB/WB (°F)	EAT DB/WB (°F)	LAT DB/WB (°F)	TOTAL / SENSIBLE CAPACITY (MBH)	OA DB (°F)	EAT DB (°F)	LAT DB (°F)	MECHANICAL HEATING CAPACITY (MBH)	MERV RATING	THICKNESS (IN.)	VOLTAGE	PHASE	MCA (Amps)		
C-AHU-1	CHEMICAL BUILDING	530	-	100/70	85/67	-	12/10	-15	55	-	10	8	1	208	1	1	MITSUBISHI PLA-A12EA7	3, 4, 7, 11
C-AHU-2	CHEMICAL BUILDING	530	-	100/70	85/67	-	12/10	-15	55	-	10	8	1	208	1	1	MITSUBISHI PLA-A12EA7	3, 4, 7, 11
C-HP-1	CHEMICAL BUILDING	-	-	100	-	-	-	-15	-	-	-	-	-	208	1	11	MITSUBISHI PUZ-A12NKA7	8, 10
C-HP-2	CHEMICAL BUILDING	-	-	100	-	-	-	-15	-	-	-	-	-	208	1	11	MITSUBISHI PUZ-A12NKA7	8, 10

NOTES:

1 BOTTOM SUPPLY DISCHARGE CONNECTION.
2 BOTTOM RETURN CONNECTION.
3 BACNET COMPATIBLE CONTROLLER WITH DISPLAY PROVIDED BY AC UNIT MANUFACTURER.
4 CONTROL SYSTEM SPECIFIED IN SECTION 23_09_13 - INSTRUMENTATION AND CONTROL DEVICES FOR HVAC.
5 INCLUDE SERVICE OPTION WITH SUPPLY-AIR SMOKE DETECTOR TO BE WIRED IN FIELD TO SHUT DOWN UPON DETECTION OF SMOKE.
6 ROOF MOUNTED SINGLE PACKAGE UNIT.
7 CEILING MOUNTED MINI SPLIT SYSTEM AIR HANDLING UNIT.
8 ROOF MOUNTED MINI SPLIT SYSTEM CONDENSER.
9 PROVIDE WITH DRY BULB ECONOMIZER.
10 PROVIDE CONDENSING UNIT SIZED PER AIR HANDLER MANUFACTURER TO PROVIDE COOLING REQUIREMENTS AS INDICATED FOR ASSOCIATED AIR HANDLER.
11 PROVIDE CONDENSATE LIFT PUMP ACCESSORY.
12 PROVIDE MANUFACTURER CONSTRUCTED ROOF CURB.

FAN SCHEDULE

EQUIPMENT TAG	AREA SERVED	FAN TYPE	AIR FLOW (CFM)	ESP (IN. W.C.)	FAN RPM	NOISE (SONES)	MOTOR				DRIVE TYPE	BASIS OF DESIGN	NOTES
							HP	RPM	V/PH/HZ	ENCLOSURE			
C-EF-1	CHEMICAL ROOM	TYPE 2	2750	0.6	1217	15.2	3/4	1725	480/3/60	TEFC	BELT	GREENHECK CUBE-160-7	1, 2, 3, 4, 5, 6, 7, 8

NOTES:

1 PROVIDE BIRD SCREEN.
2 PROVIDE BACKDRAFT DAMPER, COUNTERBALANCED FOR MINIMUM PRESSURE LOSS.
3 PROVIDE ADJUSTABLE BELT SHEAVES.
4 PROVIDE DISCONNECT SWITCH AT FAN, NEMA TYPE 3R.
5 PROVIDE HI-PRO POLYESTER COATING.
6 PROVIDE CONTROLS TO INTERLOCK WITH EQUIPMENT AS SPECIFIED IN SECTION 23_09_13.
7 PROVIDE MANUFACTURER CONSTRUCTED ROOF CURB.
8 PROVIDE BELT GUARD.

GAS UNIT HEATER SCHEDULE

EQUIPMENT TAG	AREA SERVED	INPUT CAPACITY (MBH)	OUTPUT CAPACITY (MBH)	AIR TEMP (°F)		AIRFLOW (CFM)	MCA (Amps)	VOLTAGE	PHASE	BASIS OF DESIGN	NOTES
				EAT (°F)	LAT (°F)						
C-GUH-1	ELECTRICAL ROOM	30	25	55	88	456	1.9	120	1	REZNOR UDZ-30	1, 2, 3, 4, 5, 6
C-GUH-2	ELECTRICAL ROOM	30	25	55	88	456	1.9	120	1	REZNOR UDZ-30	1, 2, 3, 4, 5, 6

NOTES:

1 THERMOSTAT PROVIDED BY HEATER MANUFACTURER.
2 PROVIDE HORIZONTAL SEPARATED COMBUSTION KIT.
3 SIDE AIR DISCHARGE.
4 PROVIDE GAS REGULATOR AT UNIT. SET DISCHARGE PRESSURE PER MANUFACTURER REQUIREMENTS.
5 CEILING SUSPENDED.
6 NATURAL GAS FIRED.

MAKE-UP AIR UNIT SCHEDULE

EQUIPMENT TAG	AREA SERVED	HEAT/COOL TYPE	SA DISCHARGE LOCATION	AIRFLOW (CFM)	WEIGHT (LBS)	ESP (IN. W.C.)	MOTOR ENCLOSURE	MOP/MOCP (AMPS)	GAS HEATING						FILTER		MCA (Amps)	VOLTAGE	PHASE	BASIS OF DESIGN	NOTES
									ELEVATION (FT)	EAT (°F)	LAT (°F)	MODULATING TURNDOWN RATIO	INPUT CAPACITY (MBH)	OUTPUT CAPACITY (MBH)	EFFICIENCY (%)						
C-MAU-1	CHEMICAL BUILDING	NATURAL GAS / NA	SIDE	2500	1500	0.75	TEFC	15	5350	-30	70	15:1	295	240	MERV 8	2	8.5	480	3	ENGINEERED AIR DJS20	1, 2, 3, 4, 5, 6, 7

NOTES:

1 PROVIDE MANUFACTURED CONSTRUCTED ROOF CURB.
2 PROVIDE WEATHER INTAKE HOOD. INTAKE HOOD VELOCITY NOT TO EXCEED 200 FEET PER MINUTE.
3 BACNET COMPATIBLE CONTROLLER PROVIDED BY MAU MANUFACTURER.
4 PROVIDE NEMA TYPE 3R CONTROL PANEL.
5 UNIT TO BE ALL ALUMINUM CONSTRUCTION.
6 PROVIDE GAS REGULATOR AT UNIT. SET DISCHARGE PRESSURE PER MANUFACTURER REQUIREMENTS.
7 PROVIDE DISCONNECT SWITCH AT UNIT, NEMA TYPE 3R.

REV	DATE	BY	DESCRIPTION
			BID SET

DESIGNED WJS
DRAWN KHB
CHECKED CAG
DATE MAY 2026

COLORADO LICENSED
CRAIG A. GREAR
0050567
PROFESSIONAL ENGINEER

CITY OF THORNTON - THORNTON WATER PROJECT
CHEMICAL BUILDING AND PRV VAULTS
HVAC
HVAC SCHEDULES

VERIFY SCALES
BAR IS ONE INCH ON ORIGINAL DRAWING
0 1"
IF NOT ONE INCH ON THIS SHEET, ADJUST SCALES ACCORDINGLY

JOB NO. 204403
DRAWING NO. 00GH02
SHEET NO. 16 OF 168

LAST SAVED BY: chernandez

PROJECT NO. 204403-100000 FILE NAME: 204403_00GH02.dwg

MINI SPLIT SYSTEM CONTROL POINTS LIST

	POINTS									ALARMS					
	GRAPHIC	ANALOG HARDWARE INPUT (AI)	BINARY HARDWARE INPUT (BI)	ANALOG HARDWARE OUTPUT (AO)	BINARY HARDWARE OUTPUT (BO)	SOFTWARE POINTS (SFT)	HARDWARE INTERLOCKS (HDW)	WIRELESS (WLS)	NETWORK (NET)	HIGH ANALOG LIMIT	LOW ANALOG LIMIT	BINARY	LATCH DIAGNOSTIC	SENSOR FAIL	COMMUNICATION FAIL
COMPRESSOR 1 COMMAND (**CMP1**)	X			X											
COMPRESSOR 2 COMMAND (**CMP2**)	X				X										
CONDENSATE OVERFLOW DETECTION (**CND OVERFLOW**)	X		X									X			
COOLING OUTPUT COMMAND (**CLG**)	X			X											
DISCHARGE AIR TEMPERATURE (**DAT**)	X	X												X	
FILTER STATUS (**FIL**)	X		X									X			
ELECTRIC HEATING STAGE 1 (**EH1**)	X				X										
REVERSING VALVE (**REV VLV**)	X				X										
SPACE TEMPERATURE LOCAL (**SPT**)	X	X								X	X			X	
SPACE TEMPERATURE SETPOINT LOCAL (**SPT SP**)	X	X													
SUPPLY FAN START STOP COMMAND (**SF**)	X				X										
SUPPLY FAN STATUS (**SF**)	X		X												
SUPPLY SMOKE DETECTOR INPUT (**SA SD**)							X								
BAS COMMUNICATION STATE (**BAS COM**)						X									X
COOLING OUTPUT (**CLG**)						X									
FAN MODE COMMAND (**FAN MODE**)						X									
FILTER TIMER HOURS (**FIL HRS**)						X									
HEAT / COOL MODE REQUEST (**H/C REQ**)	X					X									
HEAT OUTPUT (**HTG**)						X									
TIMED OVERRIDE STATUS (**TOV**)						X									

MAKEUP AIR UNIT CONTROL POINTS LIST

	POINTS									ALARMS					
	GRAPHIC	ANALOG HARDWARE INPUT (AI)	BINARY HARDWARE INPUT (BI)	ANALOG HARDWARE OUTPUT (AI)	BINARY HARDWARE OUTPUT (BI)	SOFTWARE POINTS (SFT)	HARDWARE INTERLOCKS (HDW)	WIRELESS (WLS)	NETWORK (NET)	HIGH ANALOG LIMIT	LOW ANALOG LIMIT	BINARY	LATCH DIAGNOSTIC	SENSOR FAIL	COMMUNICATION FAIL
GAS HEAT ENABLE (**GH**)	X				X										
GAS HEAT OUTPUT (**GH**)	X			X											
DISCHARGE AIR TEMPERATURE (**DAT**)	X	X												X	
FILTER STATUS (**FIL**)	X		X									X			
OUTDOOR AIR TEMPERATURE LOCAL (**OAT**)	X	X												X	
SUPPLY FAN STATUS (**SF**)	X		X												
BAS COMMUNICATION STATE (**BAS COM**)						X									X
DISCHARGE AIR HEATING SETPOINT (**DA HT SP**)						X									
MAINENANCE REQUIRED (**MNT REQ**)						X						X			
OUTDOOR AIR HEATING ENABLE SETPOINT (**OA HTG EN SP**)	X					X									
VARIOUS EXHAUST FAN INTERLOCKS (**C-EF-1 INL**)						X									

C-EF-1 CONTROL POINTS LIST

	POINTS									ALARMS					
	GRAPHIC	ANALOG HARDWARE INPUT (AI)	BINARY HARDWARE INPUT (BI)	ANALOG HARDWARE OUTPUT (AI)	BINARY HARDWARE OUTPUT (BI)	SOFTWARE POINTS (SFT)	HARDWARE INTERLOCKS (HDW)	WIRELESS (WLS)	NETWORK (NET)	HIGH ANALOG LIMIT	LOW ANALOG LIMIT	BINARY	LATCH DIAGNOSTIC	SENSOR FAIL	COMMUNICATION FAIL
FAN START STOP COMMAND (**SF**)	X				X										
FAN STATUS (**SF**)	X		X												
SMOKE DETECTOR INPUT (**SD**) (IF APPLICABLE)							X								
RUN TIME (**RN TM**)						X									
BAS COMMUNICATION STATE (**BAS COM**)						X									X

GAS UNIT HEATER CONTROL POINTS LIST

	POINTS									ALARMS					
	GRAPHIC	ANALOG HARDWARE INPUT (AI)	BINARY HARDWARE INPUT (BI)	ANALOG HARDWARE OUTPUT (AO)	BINARY HARDWARE OUTPUT (BO)	SOFTWARE POINTS (SFT)	HARDWARE INTERLOCKS (HDW)	WIRELESS (WLS)	NETWORK (NET)	HIGH ANALOG LIMIT	LOW ANALOG LIMIT	BINARY	LATCH DIAGNOSTIC	SENSOR FAIL	COMMUNICATION FAIL
DISCHARGE AIR TEMPERATURE (**DAT**)	X	X								X	X			X	
GAS HEAT STAGE 1 (EH1)	X				X										
SPACE HUMIDITY SENSOR LOCAL (SPH)	X	X								X				X	
SPACE TEMPERATURE LOCAL (**SPT**)	X	X								X	X			X	
SPACE TEMPERATURE SETPOINT LOCAL (**SPT SP**)	X	X													
SUPPLY FAN STATUS (**SF**)	X		X												
SUPPLY SUPPLY FAN OUTPUT 1 (SAF LO)	X				X										
BAS COMMUNICATION STATE (**BAS COM**)						X									X
MAINTENANCE REQUIRED (MNT REQ)						X						X			

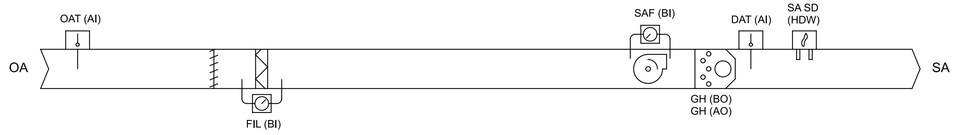

MAKEUP AIR UNIT FLOW DIAGRAM

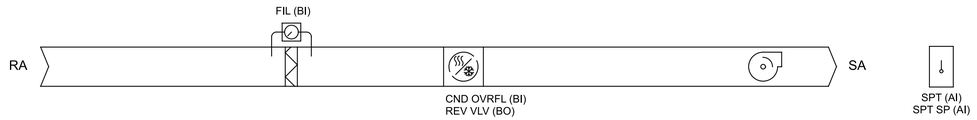

MINI SPLIT AC UNIT FLOW DIAGRAM

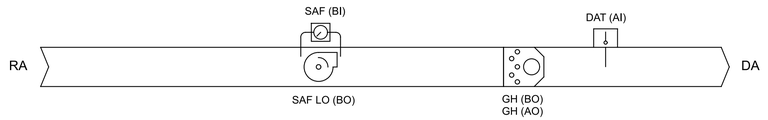

GAS UNIT HEATER FLOW DIAGRAM

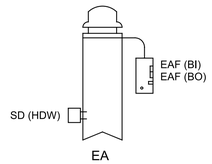

C-EF-1 FLOW DIAGRAM

BID SET

REV	DATE	BY	DESCRIPTION

DESIGNED WJS
DRAWN KHB
CHECKED CAG
DATE MAY 2026

COLORADO LICENSED
CHAD A. GARCIA
0050567
Digitally signed by Chad A. Garcia
Date: 2026.03.06 14:47:47 -07'00'
PROFESSIONAL ENGINEER

CITY OF THORNTON - THORNTON WATER PROJECT
CHEMICAL BUILDING AND PRV VAULTS
HVAC
CONTROLS SCHEMATICS AND POINTS LISTS 1

VERIFY SCALES
BAR IS ONE INCH ON ORIGINAL DRAWING
0 1"
IF NOT ONE INCH ON THIS SHEET, ADJUST SCALES ACCORDINGLY

JOB NO. 204403
DRAWING NO. 00GH03
SHEET NO. 17 OF 168

Plot Date: 26-MAR-2026 6:31:28 AM
User: svcPW
PlotScale: 1:1
DesignScript: Carollo_Std_Pen_v0905.pen
ColorTable: gshade.ctb
Model: Layout1
LAST SAVED BY: chernandez

PROJECT NO. 204403-100000 FILE NAME: 204403_00GH03.dgn

GENERAL ABBREVIATIONS

A	@	AT
	AD	AREA DRAIN
	AFF	ABOVE FINISHED FLOOR
B	BFP	BACKFLOW PREVENTER
	BLDG	BUILDING
	BOP	BOTTOM OF PIPE
	BWV	BACKWATER VALVE
C	CL	CENTERLINE
	CA	COMPRESSED AIR
	CI	CAST IRON
	CO	CLEANOUT
	CONT	CONTINUOUS, CONTINUE
	CU FT	CUBIC FEET
	CV	CHECK VALVE
	CW	COLD WATER
D	D	DRAIN
	DCO	DOUBLE CLEANOUT
	DI	DUCTILE IRON
	DN	DOWN
	DWG	DRAWING
E	E	EMERGENCY WATER
	ECO	EXTERIOR CLEANOUT
	EL	ELEVATION
	ES	EMERGENCY SHOWER
	ESEW	EMERGENCY SHOWER / EYEWASH STATION
	ETP	ELECTRONIC TRAP PRIMER
	EWC	ELECTRIC WATER COOLER
	EWH	ELECTRIC WATER HEATER
	EWU	EYE WASH UNIT
F	FAS	FLOW ALARM SWITCH
	FCO	FLOOR CLEANOUT
	FD	FLOOR DRAIN
	FE	FIRE EXTINGUISHER
	FHV&C	FIRE HOSE VALVE AND CABINET
	FS	FLOW SWITCH
	FV	FIRE VALVE
	F/BS	FACE/BODY SPRAY
G	G	GAS
	GPM	GALLONS PER MINUTE
H	HB	HOSE BIBB
	HD	HUB DRAIN
	HEV	HOSE END VALVE
	HP	HANDICAPPED (ADA ACCESSIBLE)
	HW	HOT WATER
	HWR	HOT WATER RETURN
	HWS	HOT WATER SUPPLY
I	INV	INVERT
	IOS	INSTALLED BY OTHER SECTION
	IPS	IRON PIPE SIZE
K	KS	KITCHEN SINK
	KU	KITCHEN UNIT
L	LAB	LABORATORY
	LAV	LAVATORY
	LBV	LOCKABLE BALL VALVE
	LSV	LOCK SHIELD VALVE
M	MAX	MAXIMUM
	MIN	MINIMUM
	MR	MOP RECEPTOR
N	ND	NUMBER
	NPW	NON-POTABLE WATER
O	OED	OPEN END OR OPEN EQUIPMENT DRAIN
P	P	PROTECTED WATER
	PD	PUMP DISCHARGE
	PG	PRESSURE GAUGE
	PH	POST HYDRANT
	PHW	PROTECTED HOT WATER
	PRW	PRESSURE WATER
	PRH	HIGH PRESSURE
	PSI	POUNDS PER SQUARE INCH
	PSL	LOW PRESSURE
	P&T	PRESSURE & TEMPERATURE
	PVC	POLYVINYL CHLORIDE
	PW	POTABLE WATER
R	RD	ROOF DRAIN
	RM	ROOM
	RPBP	REDUCED PRESSURE BACKFLOW PREVENTER
S	S	SOIL
	SA	SHOCK ABSORBER
	SF	SQUARE FOOT
	SH	SHOWER
	SHT	SHEET
	SP	SPRINKLER
	SQ	SQUARE
	SS	SANITARY SEWER
	SK	SINK
	SSK	SAMPLE
T	T&P	TEMPERATURE & PRESSURE RELIEF
	TD	TANK DRAIN
	THK	THICK(NESS)
	TP	TRAP PRIMER
	TW	TEPID WATER
	TWH	TANKLESS WATER HEATER
	TYP	TYPICAL
U	UNO	UNLESS NOTED OTHERWISE
	UR	URINAL
V	V	VENT
	VAC	VACUUM
	VB	VACUUM BREAKER
	VE	VACUUM EXHAUST
	VTR	VENT THROUGH ROOF
W	W	WASTE
	W/	WITH
	WC	WATER CLOSET
	WCO	WALL CLEANOUT
	WF	WASH FOUNTAIN
	WH	WALL HYDRANT
	WHA	WATER HAMMER ARRESTOR
	WHS	WASH HOSE STATION
	WT	(SANITARY) WASTE
	W&T	WASTE & TRAP
	W&V	WASTE & VENT

SERVICE LINES

- NEW COLD WATER (POTABLE)
- EXISTING COLD WATER (POTABLE)
- NEW HOT WATER (POTABLE)
- EXISTING HOT WATER (POTABLE)
- NON-POTABLE WATER
- NEW SANITARY SEWER
- EXISTING SANITARY SEWER
- SOIL OR WATER (DRAINAGE)
- TEMPERED WATER (POTABLE)
- VENT

PIPING SYMBOLS

- CO — CLEANOUT
- FLOOR CLEANOUT
- WCO — WALL CLEANOUT
- YCO — DOUBLE YARD CLEANOUT
- FLOOR DRAIN
- HUB DRAIN
- HOSE BIBB OR WALL HYDRANT
- HOSE RACK
- WATER PROOF SLEEVE
- DN OR DROP
  "DN" DENOTES PIPE WHICH PENETRATE THE FLOOR BELOW.
  "DROP" DENOTES PIPES WHICH DO NOT.
- UP OR RISE
  "UP" DENOTES PIPE WHICH PENETRATE THE FLOOR ABOVE.
  "RISE" DENOTES PIPES WHICH DO NOT.

NOTE: THE TERMS "DN" "DROP" "UP" & "RISE" ARE USED TO INDICATE THE VERTICAL DIRECTION IN WHICH A PIPE LINE CONTINUES FROM THE IMAGINARY PLANE OF VIEW. THE TERMS HAVE NO RELEVANCE TO THE DIRECTION OF FLOW WITHIN THE PIPE LINE.

- P-TRAP
- TEE
- TEE UP
- TEE DOWN
- LOCKABLE BALL VALVE
- CHECK VALVE
- GATE VALVE
- COLD BYPASS VALVE
- OR
- BALL VALVE
- GLOBE VALVE
- BUTTERFLY VALVE
- PLUG VALVE
- FLOW CONTROL
- PRESSURE REGULATOR VALVE
- UNION
- BOTTOM CONNECTION
- TOP CONNECTION
- REDUCED PRESSURE BACKFLOW PREVENTER
- TEMPERATURE GAUGE
- RE-CIRCULATION PUMP

NOTE: THIS IS A GENERAL LIST OF SYMBOLS AND ABBREVIATIONS. NOT ALL ITEMS SHOWN HERE APPEAR ON THE CONTRACT DRAWINGS.

WATER HEATER SCHEDULE

EQUIPMENT TAG	AREA SERVED	WEIGHT (LBS)	FLOW CAPACITY (GPM)	TEMP. RISE (°F)	ELEMENT (kW)	MCA (Amps)	VOLTAGE	PHASE	BASIS OF DESIGN	NOTES
C-TWH-1	CHEMICAL BUILDING	116	23	21	72	87	480	3	HAWS 9327	1

NOTES:
1 PROVIDE NEMA TYPE 4X CONTROL PANEL.

PLUMBING ROUGH IN SCHEDULE

TAG NO.	PW (IN.)	HW (IN.)	D/SS (IN.)	VENT (IN.)	FIXTURE DESCRIPTION
ALP	1-1/4"	N/A	N/A	N/A	TANKLESS WATER HEATER (HB&ESEW)

WATER HAMMER ARRESTOR SCHEDULE

SMITH MODEL *	PDI SYMBOL **	FIXTURE UNIT RATING
5005	A	1-11
5010	B	12-32
5020	C	33-60
5030	D	61-113
5040	E	114-154
5050	F	155-330

* SMITH OR EQUAL
** PLUMBING DRAINAGE INSTITUTE "STANDARD PDI WH-201"

REV	DATE	BY	DESCRIPTION
			BID SET

DESIGNED CE
DRAWN CE
CHECKED CAG
DATE MAY 2026

COLORADO LICENSED — TOMÁS A. GREER — 0050567 — Property owned by Carollo Engineers, Inc. — 2026.03.06 14:49:45 -07'00' — PROFESSIONAL ENGINEER

CITY OF THORNTON - THORNTON WATER PROJECT
CHEMICAL BUILDING AND PRV VAULTS
GENERAL
PLUMBING NOTES, ABBREVIATIONS, AND SYMBOLS

VERIFY SCALES
BAR IS ONE INCH ON ORIGINAL DRAWING
0 1"
IF NOT ONE INCH ON THIS SHEET, ADJUST SCALES ACCORDINGLY

JOB NO. 204403
DRAWING NO. 00GP01
SHEET NO. 18 OF 168

Plot Date: 26-MAR-2026 6:29:40 AM
User: svcPW
PlotScale: 1:1
DesignScript: Carollo_Std_Pen_v0905.pen
ColorTable: gshade.ctb
Model: Layout1
LAST SAVED BY: chernandez

PROJECT NO. 204403-100000 FILE NAME: 204403_00GP01.dgn

ELECTRICAL PLAN SYMBOLS

IDENTIFICATION SYMBOLS

EQUIP # — EQUIPMENT AND INSTRUMENT IDENTIFICATION

EQUIPMENT/INSTRUMENT LOCATOR

LUMINAIRE IDENTIFICATION
a = CIRCUIT DESIGNATION
b = DEVICE SWITCHED FROM
c = MOUNTING HEIGHT IN FEET TO BOTTOM OF FIXTURE
X = LUMINAIRE TYPE, REFER TO THE LUMINAIRE SCHEDULE

XXXX — CONDUIT IDENTIFICATION
XXXX = CONDUIT NUMBER, REFER TO CONDUIT SCHEDULE
UNLESS OTHERWISE NOTED, GROUPED CONDUITS ARE LABELED LEFT TO RIGHT OR TOP TO BOTTOM.

INDICATES KEYNOTE X
(PERTAINS ONLY TO SHEET WHERE NOTE IS FOUND)

DISCONNECT SWITCH
A = TYPE, REFER TO DISCONNECT SCHEDULE

CAMERA

LUMINAIRES

LINEAR FIXTURE

2' X 2' LAY-IN TROFFER

2' X 4' LAY-IN TROFFER

LUMINAIRE POLE MOUNTED

LUMINAIRE, EMERGENCY BATTERY-POWERED

LUMINAIRE, EMERGENCY/EXIT BATTERY-POWERED

LUMINAIRE, EMERGENCY BATTERY-POWERED REMOTE

LUMINAIRE, SURFACE OR PENDANT MOUNTED

LUMINAIRE, WALL MOUNTED

LUMINAIRE, FLOOD/SPOT

LUMINAIRE, EXIT ONE OR TWO FACES AS INDICATED. ARROW POINTS IN DIRECTION OF EGRESS.

SWITCHES/RECEPTACLES

SINGLE POLE SWITCH
a = CIRCUIT DESIGNATION
b = DEVICE SWITCHED DESIGNATION
c = TYPE
2 = DOUBLE POLE SWITCH
3 = THREE-WAY SWITCH
3P = THREE POSITION SWITCH
4 = FOUR-WAY SWITCH
K = KEY OPERATED SWITCH
F = SWITCH AND FUSESTAT HOLDER
P = SWITCH AND PILOT LIGHT
T = THERMOSTAT
D = DIMMER SWITCH
L = LOW VOLTAGE LIGHT SWITCH
M = MANUAL MOTOR STARTER
N = NETWORKED SINGLE OR MULTIPLE SWITCH LOCATIONS
WP = WEATHER PROOF
REFER TO ABBREVIATIONS LEGEND FOR ALL OTHER DESIGNATIONS.

OCCUPANCY SENSOR
X = REFERENCE LIGHTING CONTROL COMPONENT SCHEDULE
a = CIRCUIT DESIGNATION
b = DEVICE SWITCHED DESIGNATION
c = MOUNTING HEIGHT IN FEET TO BOTTOM OF SENSOR

PE — PHOTOCELL

SWITCH AND SINGLE RECEPTACLE
a = CIRCUIT DESIGNATION
b = DEVICE TYPE DESIGNATION

DUPLEX RECEPTACLE

QUADRUPLEX RECEPTACLE

IN FLOOR DUPLEX RECEPTACLE

IN FLOOR QUADRUPLEX RECEPTACLE

DUPLEX RECEPTACLE w/SPLIT WIRE

DEDICATED RECEPTACLE

SPECIAL PURPOSE RECEPTACLE

WELDING RECEPTACLE
a = CIRCUIT DESIGNATION
b = DISCONNECT TYPE

TWIST LOCK RECEPTACLE
a = AMP RATING

TELEPHONE OUTLET

DATA COMMUNICATIONS OUTLET
a = NETWORK SWITCH

FIRE ALARM

FACP — FIRE ALARM CONTROL PANEL

RACEWAY

EXPOSED CONDUIT

BREAK AND CONTINUATION IN CONDUIT RUN

EXPOSED CONDUIT HIDDEN BEHIND WALLS, FLOORS OR OTHER STRUCTURES

UNDERGROUND CONDUIT, DIRECT BURIED OR IN DUCT BANK

CONDUIT IN SLAB

CONDUIT VERTICAL CHANGE IN DIRECTION

CONDUIT CAP

J — JUNCTION BOX

CONDUIT SEAL

CONDUIT TEE

DUCT BANK
APPROXIMATE DIMENSIONS SHOWN ON DUCT BANK SECTIONS

CONDUIT SIZE AND CONDUCTORS

INDIVIDUAL CONDUCTORS

W"C-(3-X (Ø), 1-Y (N) & 1-Z (G))

W"C (WHERE INDICATED): W = CONDUIT TRADE SIZE

3-X (Ø):
3 = QUANTITY
X = SIZE OF CONDUCTORS
(Ø) = DESIGNATES PHASE CONDUCTORS

1-Y (N) (WHERE INDICATED):
1 = QUANTITY
Y = SIZE OF CONDUCTORS
(N) = DESIGNATES NEUTRAL CONDUCTORS

1-Z (G) (WHERE INDICATED):
1 = QUANTITY
Z = SIZE OF CONDUCTORS
(G) = DESIGNATES GROUND CONDUCTORS

U{3-X (Ø) & 1-X (G)}
U = NUMBER OF PARALLEL RUNS

VFD CONDUCTORS

U{[N/C-X (Ø) & INTEGRAL (G)]:VFD}
U = NUMBER OF PARALLEL RUNS
N/C = NUMBER OF PHASE CONDUCTORS IN CABLE
X = SIZE OF CONDUCTORS
VFD = VFD CABLE

MULTI CONDUCTOR CABLES

K/2/C#16S
K (WHERE INDICATED) = NUMBER OF PAIRS
2/C#16S = TWO CONDUCTOR, 16 GAUGE, TWISTED SHIELDED PAIR

K/3/C#16S
K (WHERE INDICATED) = NUMBER OF TRIPLETS
3/C#16S = THREE CONDUCTOR, 16 GAUGE, TWISTED SHIELDED TRIPLETS

U{[N/C-X (Ø) & INTEGRAL (G)]:MC}
U = NUMBER OF PARALLEL RUNS
MC = MULTICONDUCTOR CABLE
N/C = NUMBER OF PHASE CONDUCTORS IN THE CABLE
X = SIZE OF CONDUCTORS

FIBER OPTIC CABLES

FO/N
N = NUMBER OF INDIVIDUAL FIBERS

GROUNDING

UNDERGROUND GROUND CABLE
#4/0 SDBC UNLESS OTHERWISE NOTED

GROUND ROD

GROUND ROD AND GROUND WELL

ELECTRICAL ONE-LINE SYMBOLS

MEDIUM VOLTAGE

52 — CIRCUIT BREAKER, MEDIUM VOLTAGE
a = CIRCUIT BREAKER NUMBER
b = FRAME SIZE

ANSI RELAY DEVICE
a = ANSI DEVICE FUNCTION
b = QUANTITY

MEDIUM VOLTAGE DISCONNECT SWITCH NON-FUSED CUT OUT

MEDIUM VOLTAGE DISCONNECTING FUSE SINGLE FUSE CUT OUT

MEDIUM VOLTAGE DISCONNECTING FUSE DOUBLE FUSE CUT OUT

MEDIUM VOLTAGE SINGLE FUSE

MEDIUM VOLTAGE DOUBLE FUSE

MEDIUM VOLTAGE LIVE FRONT TERMINATOR

MEDIUM VOLTAGE ELBOW

MEDIUM VOLTAGE TEE

MEDIUM VOLTAGE CONTACTOR

MEDIUM VOLTAGE STARTER

MOV-ELBOW ARRESTER

LOW VOLTAGE

LOW VOLTAGE CIRCUIT BREAKER
a = TYPE
MCP = MOTOR CIRCUIT PROTECTOR
TM = THERMAL MAGNETIC
SS = SOLID STATE
b = FRAME SIZE (MANUFACTURER TO DETERMINE FRAME SIZE UNLESS INDICATED)
c = NUMBER OF POLES
d = TRIP SETTING (AT = AMP TRIP) (AC = MCP CONTINUOUS RATING)
e = DESIGNATION
f = INTERRUPTING RATING

LOW VOLTAGE CIRCUIT BREAKER AUXILIARY OPERATOR
* = S = SHUNT TRIP
= G = GROUND FAULT INTERRUPTER
= V = SOLENOID KEY RELEASE

A — DISCONNECT SWITCH
A = TYPE, REFER TO DISCONNECT SCHEDULE

B — FUSED DISCONNECT SWITCH
B = TYPE, REFER TO DISCONNECT SCHEDULE
b = FUSE RATING

FUSE

COMBINATION STARTER WITH CONTROL POWER TRANSFORMER
a = CIRCUIT BREAKER DISCONNECT, TYPE AS NOTED
b = STARTER TYPE REFER TO THE SPECIFICATIONS FOR STARTER DEFINITIONS.
c = NEMA STARTER SIZE
d = OVERLOAD

MOTOR STARTER/DRIVES:
a = DEVICE TYPE
VFD-6 = 6-PULSE VFD
VFD-18 = 18-PULSE VFD
VFD-RH = REDUCED HARMONIC VFD (18-PULSE OR ACTIVE FRONT END AS DEFINED IN THE SPECIFICATIONS)
RVSS = REDUCED VOLTAGE SOLID STATE STARTER
RVAT = REDUCED VOLTAGE AUTO TRANSFORMER
a/B = DEVICE WITH BYPASS STARTER. REFER TO THE SPECIFICATIONS

b = INPUT OPTIONS
LL = LINE REACTOR
PHF = PASSIVE HARMONIC FILTER

c = OUTPUT OPTIONS
LR = LOAD REACTOR
DV/DT = Dv/dt FILTER
SWF = SINE WAVE FILTER

EQUIPMENT ENCLOSURE

MISCELLANEOUS

HP — MOTOR
HP = HORSEPOWER RATING
FULL LOAD AMPS AS NOTED

PACKAGED EQUIPMENT
LOAD RATING AS INDICATED
a = RATED LOAD
b = UNIT(HP, KW, KVA) AS INDICATED

TRANSFORMER
a = DEVICE I.D.
b = KVA RATING
c = NUMBER OF PHASES
d = PRIMARY VOLTAGE
e = SECONDARY VOLTAGE
f,g = CONNECTION TYPE SYMBOL
h = IMPEDANCE

GROUNDED WYE CONNECTION

DELTA CONNECTION

G — ENGINE-GENERATOR RATINGS AS INDICATED ON THE DRAWINGS
a = KVA/KW
b = VOLTAGE/CONNECTION
c = PHASE
d = WIRE
e = PF

CURRENT TRANSFORMER WITH SHORTING TERMINAL BLOCK
a = QUANTITY
b = RATIO

POTENTIAL TRANSFORMER
a = QUANTITY
b = RATIO
c,d = CONNECTION TYPE SYMBOL

SSM — SOLID STATE MULTIFUNCTION METER

ATP — AMPERE TEST POINT

VTP — VOLTAGE TEST POINT

UTILITY METER

LIGHTNING ARRESTER

SPD — SURGE PROTECTIVE DEVICE

DRAWOUT CONNECTION

GROUND

CAPACITOR

BATTERY

K — KIRK KEY INTERLOCK

LOAD BANK

REV	DATE	BY	DESCRIPTION
			BID SET

DESIGNED CE
DRAWN CE
CHECKED CE
DATE MAY 2026

COLORADO LICENSED — KELLEN GIBSON — 55107 — Registered Agent for Kellen W. Gibson, Carollo Engineers, Inc. — 2026.05.08 16:30:44 -06'00' — PROFESSIONAL ENGINEER

CITY OF THORNTON - THORNTON WATER PROJECT
CHEMICAL BUILDING AND PRV VAULTS
ELECTRICAL
ELECTRICAL LEGEND

VERIFY SCALES
BAR IS ONE INCH ON ORIGINAL DRAWING
0 1"
IF NOT ONE INCH ON THIS SHEET, ADJUST SCALES ACCORDINGLY

JOB NO. 204403
DRAWING NO. 00GE01
SHEET NO. 19 OF 168

LAST SAVED BY: GHerrera

PROJECT NO. 204403-100000 FILE NAME: 204403_00GE01.dwg

ABBREVIATIONS

A	AMP
ABS	ABSOLUTE
AC	ALTERNATING CURRENT
ACK	ACKNOWLEDGE
ACTR	ACTUATOR
AF	AMP FRAME
AFC	AUTOMATIC FREQUENCY CONTROL
AIC	AMP INTERRUPTING CAPACITY
AM	AMMETER
ANN	ANNUNCIATOR
ANT	ANTENNA
APU	AUXILIARY POWER UNIT
ARM	ARMORED CABLE
AS	AMMETER SWITCH
ASYM	ASYMMETRICAL
AT	AMP TRIP
ATO	AUTOMATIC THROW OVER
ATP	AMMETER TEST POINT
ATS	AUTOMATIC TRANSFER SWITCH
AUTO XFMR	AUTOMATIC TRANSFORMER
AUX	AUXILIARY
AWG	AMERICAN WIRE GAUGE
B	BELL
BAT	BATTERY
BFG	BELOW FINISHED GRADE
BHP	BRAKE HORSEPOWER
BKR	BREAKER
BRF	BELOW RAISED FLOOR
C	CONDUIT / CONTINUOUS LOAD
CB	CIRCUIT BREAKER
CCTV	CLOSED CIRCUIT TELEVISION
CCW	COUNTER CLOCKWISE
CKT	CIRCUIT
COAX	COAXIAL CABLE
COM	COMMON
COMM	COMMUNICATION
CPT	CONTROL POWER TRANSFORMER
CR	CONTROLLED RECEPTACLE
CS	CONTROL SWITCH
CT	CURRENT TRANSFORMER
CV	CONTROL VALVE
CW	CLOCKWISE / COOL WHITE
DC	DIRECT CURRENT
DCS	DISTRIBUTED CONTROL SYSTEM
DCU - X	DISTRIBUTED CONTROL UNIT NO. X
DEMO	DEMOLITION
DISC	DISCONNECT SWITCH
DM	DEMAND METER
DPDT	DOUBLE POLE DOUBLE THROW
DPST	DOUBLE POLE SINGLE THROW
DS	DOOR SWITCH
E/G	EMERGENCY GENERATOR
EM	EMERGENCY
EMT	ELECTRICAL METALLIC TUBING
ENCL	ENCLOSURE
ENG	ENGINE
ENT	ELECTRICAL NON-METALLIC TUBING
EP	EXPLOSION PROOF
ETM	ELAPSED TIME METER
F	SUB-FED
FA	FIRE ALARM
FACP	FIRE ALARM CONTROL PANEL
FDR	FEEDER
FLA	FULL LOAD AMPS
FLX	FLEXIBLE CONDUIT
FO	FIBER OPTIC
FRC	FIBERGLASS RIGID CONDUIT
FREQ	FREQUENCY
FU	FUSE
FU SW	FUSED SWITCH
FVNR	FULL VOLTAGE NON-REVERSING
FVR	FULL VOLTAGE REVERSING
FWD	FORWARD

G	GROUND / EQUIPMENT GROUND / GROUND FAULT
GEN	GENERATOR
GRC	GALVANIZED STEEL RIGID CONDUIT
GFCI	GROUND FAULT CIRCUIT INTERRUPTER (RECEPTACLE)
GFI	GROUND FAULT INTERRUPTER (BREAKER)
GFR	GROUND FAULT RELAY
H	HOT-LEG
HF	HIGH FREQUENCY
HP	HORSEPOWER
HPS	HIGH PRESSURE SODIUM
HR	HOUR
HSTAT	HUMIDISTAT
HV	HIGH VOLTAGE
HVAC	HEATING/VENTILATION/AIR CONDITIONING
HZ	HERTZ
I	INSTANTANEOUS / INTERMITTENT LOAD
IC	INTERRUPTING CAPACITY
IJB	INSTRUMENT JUNCTION BOX
IMC	INTERMEDIATE METAL CONDUIT
INST	INSTANTANEOUS
INT	INTERLOCK
INTERCOM	INTERCOMMUNICATION
J	JUNCTION BOX
K	KEY INTERLOCK
KA	KILOAMP
KV	KILOVOLT
KVA	KILOVOLT AMPERE
KVAR	KILOVAR (REACTANCE)
KW	KILOWATT
KWD	KILOWATT DEMAND
KWH	KILOWATT HOUR
L	LONG-TIME
L-B	LINE-BUS
L-G	LINE-GROUND
LA	LIGHTNING ARRESTOR
LBL	LABEL
LC	LIGHTING CONTACTOR
LCP- X	LOCAL CONTROL PANEL NO. X
LL	LEAD-LAG LOAD REACTOR
LP	LIGHT POLE
LP - X	LIGHTING PANEL NO. X
LTG	LIGHTING
LV	LOW VOLTAGE
LVL	LEVEL
M-X	MOTOR CONTROLLER NO. X
MA	MILLIAMPERE
MCA	MOTOR CIRCUIT AMPS
MCC - X	MOTOR CONTROL CENTER NO. X
MCP	MOTOR CIRCUIT PROTECTOR
MH	MANHOLE / MOUNTING HEIGHT
MLO	MAIN LUGS ONLY
MOD	MOTOR OPERATED DAMPER
MOV	METAL OXIDE VARISTOR
MPR	MOTOR PROTECTION RELAY
MS-X	MOTOR STARTER NO. X
MSP	MOTOR STARTING PANEL
MTO	MANUAL THROW OVER
MTR-X	MOTOR NO. X
MTS	MANUAL TRANSFER SWITCH
MV	MEGAVOLT
MVA	MEGAVOLT-AMPERES
MVS	MEDIUM VOLTAGE SWITCH
MW	MEGAWATT
N	NEUTRAL
NC	NORMALLY CLOSED
NEC	NATIONAL ELECTRICAL CODE
NFC	NONMETALLIC FLEXIBLE CONDUIT
NL	NIGHT LIGHT
NO	NORMALLY OPEN
NP	NAMEPLATE

O	OPEN OR OPENED
OH	OVERHEAD
OL	OVERLOAD RELAY
P	POLE
PA	PUBLIC ADDRESS
PB	PUSHBUTTON / PULL BOX
PCS	PVC COATED GALVANIZED STEEL CONDUIT
PCM	PROCESS CONTROL MODULE
PE	PHOTOCELL
PF	POWER FACTOR
PFCC	POWER FACTOR CORRECTION CAPACITOR
PFR	PHASE FAILURE RELAY
PH	PHASE
PNL	PANEL
PPX	POWER PANEL NO. X
PRI	PRIMARY
PT	POTENTIAL TRANSFORMER
PVC	POLYVINYL CHLORIDE RIGID PLASTIC CONDUIT
PWR	POWER
RAC	RIGID ALUMINUM CONDUIT
RECPT	RECEPTACLE
REV	REVERSE
RF	RADIO FREQUENCY
RMS	ROOT MEAN SQUARED
RVAT	REDUCED VOLTAGE AUTO TRANSFORMER
RVNR	REDUCED VOLTAGE NON-REVERSING
RVSS	REDUCED VOLTAGE SOLID STATE
S	SHIELD / SHORT-TIME
SA	SURGE ARRESTER
SC	SHORT CIRCUIT
SDBC	SOFT DRAWN BARE COPPER
SFL	SUB FEED LUGS
SLT	SEALTIGHT LIQUIDTIGHT FLEXIBLE CONDUIT
SM	SURFACE MOUNTED
SP	SINGLE POLE
SPD	SURGE PROTECTIVE DEVICE
SPDT	SINGLE POLE DOUBLE THROW
SPST	SINGLE POLE SINGLE THROW
SPKR	SPEAKER
SS	SOLID STATE
STB	SHORTING TERMINAL BLOCK
SW	SWITCH
SWBD	SWITCHBOARD
SWGR	SWITCHGEAR
SYM	SYMMETRICAL
TACH	TACHOMETER
TB - X	TERMINAL BLOCK - UNIT X
TC	THERMOCOUPLE / TIME CLOCK / TRAY CABLE
TD	TEMPERATURE DETECTOR RELAY
TE	TOTALLY ENCLOSED
TEFC	TOTALLY ENCLOSED FAN COOLED
TENV	TOTALLY ENCLOSED NON-VENTILATED
TERM	TERMINAL
TJB	TERMINAL JUNCTION BOX
TM	THERMAL MAGNETIC
TP	TWISTED PAIR
TS	TEMPERATURE SWITCH
TS1W	TWO SPEED CONSEQUENT POLE, ONE WINDING
TS2W	TWO SPEED SEPARATE WINDING
TSTAT	THERMOSTAT
UHF	ULTRA HIGH FREQUENCY
UNG	UNGROUNDED
UPS	UNINTERRUPTIBLE POWER SUPPLY
UVR	UNDER VOLTAGE RELAY

V	VOLT
VA	VOLT AMPERE
VAR	VARMETER
VCP	VENDOR CONTROL PANEL
VFD	VARIABLE FREQUENCY DRIVE
VHF	VERY HIGH FREQUENCY
VM	VOLTMETER
VP	VAPORPROOF
VR	VOLTAGE REGULATOR
VS	VOLTAGE SWITCH
VT	VOLTAGE TRANSFORMER
VTP	VOLTAGE TEST POINT
W	WATT / WEST
WT	WATER TIGHT
WP	WEATHER PROOF
XFMR	TRANSFORMER

NOTES:

1. REFER TO SPECIFICATIONS AND OTHER DRAWINGS FOR ADDITIONAL ABBREVIATIONS.

POWER DEVICE FUNCTION NUMBERS

1	MASTER ELEMENT
2	TIME-DELAY STARTING OR CLOSING RELAY
3	CHECKING OR INTERLOCKING RELAY
4	MASTER CONTACTOR
5	STOPPING DEVICE
6	STARTING CIRCUIT BREAKER
7	ANODE CIRCUIT BREAKER
8	CONTROL POWER DISCONNECTING DEVICE
9	REVERSING DEVICE
10	UNIT SEQUENCE SWITCH
11	MULTIFUNCTION DEVICE
12	OVER-SPEED DEVICE
13	SYNCHRONOUS-SPEED DEVICE
14	UNDER-SPEED DEVICE
15	SPEED OR FREQUENCY MATCHING DEVICE
16	DATA COMMUNICATIONS DEVICE
17	SHUNTING OR DISCHARGE SWITCH
18	ACCELERATING OR DECELERATING DEVICE
19	STARTING-TO-RUNNING TRANSITION CONTACTOR
20	ELECTRICALLY OPERATED VALVE
21	DISTANCE RELAY
22	EQUALIZER CIRCUIT BREAKER
23	TEMPERATURE CONTROL DEVICE
24	VOLTS PER HERTZ RELAY
25	SYNCHRONIZING OR SYNCHRONISM-CHECK DEVICE
26	APPARATUS THERMAL DEVICE
27	UNDERVOLTAGE RELAY
27N	GROUND FAULT UNDERVOLTAGE RELAY
28	FLAME DETECTOR
29	ISOLATING CONTACTOR
30	ANNUNCIATOR RELAY
31	SEPARATE EXCITATION DEVICE
32	DIRECTIONAL POWER RELAY
33	POSITION SWITCH
34	MASTER SEQUENCE DEVICE
35	BRUSH-OPERATING OR SLIP-RING SHORT-CIRCUITING DEVICE
36	POLARITY DEVICE
37	UNDERCURRENT OR UNDERPOWER RELAY
38	BEARING PROTECTIVE DEVICE
39	MECHANICAL CONDITION MONITOR
40	FIELD RELAY
41	FIELD CIRCUIT BREAKER
42	RUNNING CIRCUIT BREAKER
43	MANUAL TRANSFER OR SELECTOR DEVICE
44	UNIT SEQUENCE STARTING RELAY
45	ABNORMAL ATMOSPHERIC CONDITION MONITOR
46	REVERSE-PHASE OR BALANCE CURRENT RELAY
47	PHASE-BALANCE OR PHASE-SEQUENCE VOLTAGE RELAY
48	INCOMPLETE SEQUENCE RELAY
49	MACHINE OR TRANSFORMER THERMAL RELAY
50	INSTANTANEOUS OVERCURRENT RELAY
51	AC TIME OVERCURRENT RELAY
52	AC CIRCUIT BREAKER
53	FIELD EXCITATION RELAY
54	TURNING GEAR ENGAGING DEVICE
55	POWER FACTOR RELAY
56	FIELD APPLICATION RELAY
57	SHORT-CIRCUITING OR GROUNDING DEVICE
58	RECTIFICATION FAILURE RELAY
59	OVERVOLTAGE RELAY
60	VOLTAGE OR CURRENT BALANCE RELAY
61	DENSITY SWITCH OR SENSOR
62	TIME-DELAY STOPPING OR OPENING RELAY
63	PRESSURE SWITCH
64	GROUND DETECTOR RELAY
65	GOVERNOR
66	NOTCHING OR JOGGING DEVICE
67	AC DIRECTIONAL OVERCURRENT RELAY
68	BLOCKING OR OUT OF STEP RELAY
69	PERMISSIVE CONTROL DEVICE
70	RHEOSTAT
71	LIQUID LEVEL SWITCH
72	DC CIRCUIT BREAKER
73	LOAD-RESISTOR CONTACTOR
74	ALARM RELAY
75	POSITION CHANGING MECHANISM
76	DC OVERCURRENT RELAY
77	TELEMETERING DEVICE
78	PHASE-ANGLE MEASURING RELAY
79	AC RECLOSING RELAY
80	FLOW SWITCH
81	FREQUENCY RELAY
82	DC LOAD MEASURING RECLOSING RELAY
83	AUTOMATIC SELECTIVE CONTROL OR TRANSFER RELAY
84	OPERATING MECHANISM
85	PILOT COMMUNICATIONS, CARRIER OR PILOT-WIRE RELAY
86	LOCKOUT RELAY
87	DIFFERENTIAL PROTECTIVE RELAY
88	AUXILIARY MOTOR OR MOTOR GENERATOR
89	LINE SWITCH
90	REGULATING DEVICE
91	VOLTAGE DIRECTIONAL RELAY
92	VOLTAGE AND POWER DIRECTIONAL RELAY
93	FIELD-CHANGING CONTACTOR
94	TRIPPING OR TRIP-FREE RELAY

COMMONLY USED SUFFIX LETTER APPLIED TO POWER DEVICE FUNCTION NUMBERS

A	ALARM ONLY
B	BUS PROTECTION
G	GROUND FAULT PROTECTION (RELAY CT IN A SYSTEM NEUTRAL CIRCUIT OR GENERATOR PROTECTION)
GS	GROUND FAULT PROTECTION (RELAY CT IN TOROIDAL OR GROUND SENSOR TYPE)
L	LINE PROTECTION
M	MOTOR PROTECTION
N	GROUND FAULT PROTECTION (RELAY COIL CONNECTED IN RESIDUAL CT CIRCUIT) OR NEGATIVE SEQUENCE
T	TRANSFORMER PROTECTION
V	VOLTAGE
P	PHASE PROTECTION

ABBREVIATIONS

AFD	ARC FLASH DETECTOR
CLK	CLOCK OR RIMING SOURCE
DDR	DYNAMIC DISTURBANCE RECORDER
DFR	DIGITAL FAULT RECORDER
ENV	ENVIRONMENTAL DATA
HIZ	HIGH IMPEDANCE FAULT DETECTOR
HMI	HUMAN MACHINE INTERFACE
HST	HISTORIAN
LGC	SCHEME LOGIC
MET	SUBSTATION METERING
PDC	PHASOR DATA CONCENTRATOR
PMU	PHASOR MEASUREMENT UNIT
PQM	POWER QUALITY MONITOR
RIO	REMOTE I/O DEVICE
RTU	REMOTE TELEMETRY UNIT/REMOTE TERMINAL UNIT
SER	SEQUENCE OF EVENTS RECORDER
TCM	TRIP CIRCUIT MONITOR

REV	DATE	BY	DESCRIPTION
			BID SET

DESIGNED CE
DRAWN CE
CHECKED CE
DATE MAY 2026

COLORADO LICENSED
MELLEN GROSS
55107
Digitally signed by Kellen W Gross
Date: 2026.05.18 09:39:54 -06'00'
PROFESSIONAL ENGINEER

carollo

THORNTON WATER PROJECT

CITY OF THORNTON - THORNTON WATER PROJECT
CHEMICAL BUILDING AND PRV VAULTS
ELECTRICAL
ELECTRICAL ABBREVIATIONS

VERIFY SCALES
BAR IS ONE INCH ON ORIGINAL DRAWING
0 1"
IF NOT ONE INCH ON THIS SHEET, ADJUST SCALES ACCORDINGLY

JOB NO. 204403
DRAWING NO. 00GE02
SHEET NO. 20 OF 168

LAST SAVED BY: GHerrera

PROJECT NO. 204403-100000 FILE NAME: 204403_00GE02.dwg

SYMBOL	DRAWING VISIBLE FIELDS	FIELD - 1	FIELD - 2	FIELD - 3	FIELD - 4	FIELD - 5	FIELD - 6	FIELD - 7	FIELD - 8
HARDWIRED I/O POINT 	1 - TAG 2 - LOOP NUMBER 3 - FUNCTION 4 - DESCRIPTION 5 - LOCATION 6 - EXISTING/FUTURE 7 - IO TABLE	REFER 	REFER	AI - ANALOG INPUT AO - ANALOG OUTPUT DI - DISCRETE INPUT DO - DISCRETE OUTPUT RTD - RTD INPUT	DESCRIPTION	PAC - PROGRAMMABLE AUTOMATION CONTROLLER NO. PLC - PROGRAMMABLE LOGIC CONTROLLER NO. RIO - REMOTE I/O VCP - VENDOR CONTROL PANEL NO.	E - EXISTING F - FUTURE		
NETWORK / SOFT I/O 	1 - TAG 2 - LOOP NUMBER 3 - PROTOCOL 4 - PANEL 5 - PLC 6 - EXISTING/FUTURE 7 - IO TABLE 8 - SWITCH/SEGMENT	REFER 	REFER	COMMUNICATION PROTOCOL CNET - CONTROLNET DNET - DEVICENET EIP - ETHERNET/IP FF - FOUNDATION FIELDBUS HART-IP - HART OVER ETHERNET MANF - MFR. PROPRIETARY MBRTU - MODBUS RTU MB+ - MODBUS PLUS MBTCP - MODBUS TCP DP - PROFIBUS DP PA - PROFIBUS PA PNET - PROFINET SNMP - SNMPv3 HTTP - WEB SERVER (TCP/IP)	DESCRIPTION	PAC - PROGRAMMABLE AUTOMATION CONTROLLER NO. PLC - PROGRAMMABLE LOGIC CONTROLLER NO. RIO - REMOTE I/O VCP - VENDOR CONTROL PANEL NO.	E - EXISTING F - FUTURE		
PILOT DEVICE OPERATOR INTERFACE 	1 - TAG 2 - LOOP NUMBER 3 - FUNCTION 4 - DESCRIPTION 5 - LOCATION 6 - EXISTING/FUTURE	REFER 	REFER	AM - AUTO/MANUAL BYPASS - BY PASS ESD - EQUIPMENT SHUTDOWN HOA - HAND/OFF/AUTO LOR - LOCAL/OFF/REMOTE LOS - LOCK OUT STOP LS - LEAD/STANDBY LSR - LOCAL/STOP/REMOTE OC - OPEN/CLOSE OO - OFF/ON OSC - OPEN/STOP/CLOSE RST - RESET SEL - SELECT SPD - SPEED SS - START/STOP ST - STOP	DESCRIPTION 	LCP - LOCAL CONTROL PANEL NO. MCC - MOTOR CONTROL CENTER NO. PCM - PROCESS CONTROL MODULE NO. RVSS - REDUCED VOLTAGE SOLID STARTER NO. VCP - VENDOR CONTROL PANEL NO. VFD - VARIABLE FREQUENCY DRIVE NO.	E - EXISTING F - FUTURE		
POWER DEVICE PRIMARY FUNCTION OPERATOR ACCESSIBLE 	1 - TAG 2 - LOOP NUMBER 3 - FUNCTION 4 - VOLTAGE-POLE 5 - LOCATION 6 - EXISTING/FUTURE	CB - CIRCUIT BREAKER DISC - DISCONNECT FU - FUSE	REFER 	TM - THERMAL MAGNETIC CIRCUIT BREAKER	24VDC - 1P 24VDC - 2P 24VAC - 1P 48VDC - 2P 120VAC - 1P 208VAC - 2P 208VAC - 3P 240VAC - 2P 240VAC - 3P 480VAC - 3P 2400VAC - 3P 4160VAC - 3P	DP - DISTRIBUTION PANEL NO. LCP - LOCAL CONTROL PANEL NO. LP - LIGHTING PANEL NO. MCC - MOTOR CONTROL CENTER NO. PCM - PROCESS CONTROL MODULE NO. PP - POWER PANEL NO. VCP - VENDOR CONTROL PANEL NO.	E - EXISTING F - FUTURE		
POWER DEVICE AUXILIARY FUNCTION OPERATOR ACCESSIBLE 	1 - TAG 2 - LOOP NUMBER 3 - DESCRIPTION 4 - DESCRIPTION 5 - DESCRIPTION 6 - EXISTING/FUTURE	DISC - DISCONNECT	REFER 	DESCRIPTION	DESCRIPTION	DESCRIPTION	E - EXISTING F - FUTURE		
POWER DEVICE PRIMARY FUNCTION OPERATOR INACCESSIBLE 	1 - TAG 2 - LOOP NUMBER 3 - FUNCTION 4 - VOLTAGE-POLE 5 - LOCATION 6 - EXISTING/FUTURE	CB - CIRCUIT BREAKER FU - FUSE	REFER	MCP - MOTOR CIRCUIT PROTECTOR SS - SOLID STATE CIRCUIT BREAKER TM - THERMAL MAGNETIC CIRCUIT BREAKER	24VDC - 1P 24VDC - 2P 24VAC - 1P 48VDC - 2P 120VAC - 1P 208VAC - 2P 208VAC - 3P 240VAC - 2P 240VAC - 3P 480VAC - 3P 2400VAC - 3P 4160VAC - 3P	DP - DISTRIBUTION PANEL NO. LCP - LOCAL CONTROL PANEL NO. LP - LIGHTING PANEL NO. MCC - MOTOR CONTROL CENTER NO. PCM - PROCESS CONTROL MODULE NO. PP - POWER PANEL NO. VCP - VENDOR CONTROL PANEL NO.	E - EXISTING F - FUTURE		
FIELD EQUIPMENT STARTER / DRIVE CUBICLE / CABINET 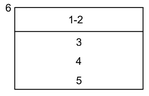	1 - TAG 2 - LOOP NUMBER 3 - TYPE 4 - VOLTAGE-POLE 5 - POWER SOURCE 6 - EXISTING/FUTURE	MS - MOTOR STARTER RVAT - REDUCED VOLTAGE AUTO TRANSFORMER STARTER RVSS - REDUCED VOLTAGE SOLID STATE STARTER VFD - VARIABLE FREQUENCY DRIVE	REFER 	FVNR - FULL VOLTAGE NON-REVERSING STARTER FVR - FULL VOLTAGE REVERSING STARTER PWS - PART-WINDING STARTER RVAT - REDUCED VOLTAGE AUTO RVSS - REDUCED VOLTAGE SOLID STATE STARTER TS1W - TWO SPEED SINGLE WINDING TS2W - TWO SPEED TWO WINDINGS VFD - VARIABLE FREQUENCY DRIVE	120VAC - 1P 208VAC - 2P 208VAC - 3P 240VAC - 2P 240VAC - 3P 480VAC - 3P 2400VAC - 3P 4160VAC - 3P	LCP - LOCAL CONTROL PANEL NO. MCC - MOTOR CONTROL CENTER NO. PCM - PROCESS CONTROL MODULE NO. VCP - VENDOR CONTROL PANEL NO.	E - EXISTING F - FUTURE		

SYMBOL	DRAWING VISIBLE FIELDS	FIELD - 1	FIELD - 2	FIELD - 3	FIELD - 4	FIELD - 5	FIELD - 6	FIELD - 7	FIELD - 8
INSTRUMENT PRIMARY ELEMENT 	1 - TAG 2 - LOOP NUMBER 3 - FUNCTION 4 - FURNISHED BY 5 - LOCATION 6 - EXISTING/FUTURE	REFER 	REFER	DESCRIPTION	DESCRIPTION 	AREA NO. BUILDING NO. ROOM NO.	E - EXISTING F - FUTURE		
INSTRUMENT/ CONTROL ELEMENT PRIMARY FUNCTION OPERATOR ACCESSIBLE 	1 - TAG 2 - LOOP NUMBER 3 - FUNCTION 4 - FURNISHED BY 5 - DESCRIPTION 6 - EXISTING/FUTURE	REFER 	REFER	DESCRIPTION	DESCRIPTION 	DESCRIPTION INT - INTEGRAL REM - REMOTE	E - EXISTING F - FUTURE		OUT - OUTDOOR
INSTRUMENT/ CONTROL ELEMENT AUXILIARY FUNCTION OPERATOR ACCESSIBLE 	1 - TAG 2 - LOOP NUMBER 3 - FUNCTION 4 - FURNISHED BY 5 - LOCATION 6 - EXISTING/FUTURE	REFER 	REFER	DESCRIPTION	DESCRIPTION	DESCRIPTION	E - EXISTING F - FUTURE		
INSTRUMENT/ CONTROL ELEMENT PRIMARY FUNCTION OPERATOR INACCESSIBLE	1 - TAG 2 - LOOP NUMBER 3 - FUNCTION 4 - FURNISHED BY 5 - LOCATION 6 - EXISTING/FUTURE	REFER  XR - PROTECTION RELAY CR - CONTROL RELAY XR - INTERPOSING RELAY	REFER	DESCRIPTION	DESCRIPTION	DESCRIPTION	E - EXISTING F - FUTURE		
INSTRUMENT/ CONTROL ELEMENT AUXILIARY FUNCTION OPERATOR INACCESSIBLE 	1 - TAG 2 - LOOP NUMBER 3 - FUNCTION 4 - FURNISHED BY 5 - LOCATION 6 - EXISTING/FUTURE	REFER  XR - PROTECTION RELAY CR - CONTROL RELAY XR - INTERPOSING RELAY	REFER 	DESCRIPTION	DESCRIPTION	DESCRIPTION	E - EXISTING F - FUTURE		
FIELD EQUIPMENT NON-POWERED	1 - TAG 2 - LOOP NUMBER 3 - FUNCTION/SIZE 4 - FURNISHED BY 5 - LOCATION 6 - EXISTING/FUTURE	REFER	REFER	DESCRIPTION	DESCRIPTION	AREA NO. BUILDING NO. ROOM NO.	E - EXISTING F - FUTURE		
FIELD EQUIPMENT PRIMARY FUNCTION POWERED	1 - TAG 2 - LOOP NUMBER 3 - FUNCTION 4 - FURNISHED BY 5 - LOCATION 6 - EXISTING/FUTURE	REFER	REFER	DESCRIPTION	DESCRIPTION	AREA NO. BUILDING NO. ROOM NO.	E - EXISTING F - FUTURE		
FIELD EQUIPMENT AUXILIARY FUNCTION POWERED	1 - TAG 2 - LOOP NUMBER 3 - FUNCTION 4 - FURNISHED BY 5 - LOCATION 6 - EXISTING/FUTURE	MWH - MOTOR WINDING HEATER TSH - TEMPERATURE SWITCH XSH - TORQUE SWITCH	REFER	DESCRIPTION	DESCRIPTION	DESCRIPTION	E - EXISTING F - FUTURE		

INSTRUMENT BUBBLE LOCATIONS

NOTES

1. INSTRUMENT TAG IDENTIFICATION LETTERS TABLE
2. OPERATOR PILOT DEVICE LEGEND
3. EQUIPMENT TAGGING TABLE
4. I/O TYPE DESIGNATIONS
5. INSTRUMENT TYPE DESIGNATIONS TABLE
6. FURNISHED BY:
   - FBO FURNISHED BY OWNER
   - FBV FURNISHED BY VENDOR
7. PROVIDED BY:
   - PBO PROVIDED BY OWNER
   - PBV PROVIDED BY VENDOR

REV	DATE	BY	DESCRIPTION
			BID SET

DESIGNED CE
DRAWN CE
CHECKED JM
DATE MAY 2026

COLORADO LICENSED
ALLEN CAROLLO
55107
PROFESSIONAL ENGINEER
Digitally signed by Kristen M Carollo
Contact Info: Carollo Engineers
Date: 2026.05.08 14:27:13 -06'00'

CITY OF THORNTON - THORNTON WATER PROJECT

CHEMICAL BUILDING AND PRV VAULTS

INSTRUMENTATION

GENERAL
SYMBOLS & ABBREVIATIONS 1

VERIFY SCALES
BAR IS ONE INCH ON ORIGINAL DRAWING
0 1"
IF NOT ONE INCH ON THIS SHEET, ADJUST SCALES ACCORDINGLY

JOB NO. 204403
DRAWING NO. 00GN01
SHEET NO. 21 OF 168

LAST SAVED BY: DCosme

PROJECT NO. 204403-100000 FILE NAME: 204403_00GN01.dwg

INSTRUMENT TAG IDENTIFICATION LETTERS

MEASURED VARIABLE / INSTRUMENTATION FUNCTION		ELEMENT	TRANSMITTER	INDICATING TRANSMITTER	CONVERTER TRANSDUCER, RELAY SPECIAL DEVICES	INDICATOR	RECORDER	CONTROL/COMMAND	INDICATING CONTROLLER	RECORDING CONTROLLER	SWITCH	SWITCH LOW LOW	SWITCH LOW	SWITCH HIGH	SWITCH HIGH HIGH	SWITCH COMBINATION HIGH LOW	ACTION OR ALARM	ALARM LOW LOW	ALARM LOW	ALARM HIGH	ALARM HIGH HIGH	TOTALIZE INDICATOR TRANSMITTER	VALVE	GAUGE	LIGHT	SPEED SETTING
A	ANALYSIS	AE	AT	AIT	AY	AI	AR	AC	AIC	ARC	AS	ASLL	ASL	ASH	ASHH	ASHL		AALL	AAL	AAH	AAHH				AL	
C	CONDUCTIVITY	CE	CT	CIT	CY	CI	CR	CC	CIC	CRC	CS	CSLL	CSL	CSH	CSHH	CSHL		CALL	CAL	CAH	CAHH				CL	
D	DENSITY	DE	DT	DIT	DY	DI	DR	DC	DIC	DRC	DS	DSLL	DSL	DSH	DSHH	DSHL		DALL	DAL	DAH	DAHH				DL	
E	VOLTAGE												ESL													
F	FLOW OR FIRE	FE	FT	FIT	FY	FI	FR	FC	FIC	FRC	FS	FSLL	FSL	FSH	FSHH	FSHL	FA	FALL	FAL	FAH	FAHH	FQI	FCV	FG	FL	
H	HAND (MANUAL)*							HC			HS*						HA*						HV		HL	HSS
I	CURRENT		IT	IIT	IY	II	IR	IC	IIC	IRC	IS	ISLL	ISL	ISH	ISHH			IALL	IAL	IAH	IAHH				IL	
J	POWER					JS																				
K	TIME				KY	KI	KR	KC	KIC	KRC	KS	KSLL	KSL	KSH	KSHH			KALL	KAL	KAH	KAHH		KV		KL	
L	LEVEL	LE	LT	LIT	LY	LI	LR	LC	LIC	LRC	LS	LSLL	LSL	LSH	LSHH	LSHL		LALL	LAL	LAH	LAHH		LCV	LG	LL	
M	MOISTURE OR HUMIDITY	ME	MT	MIT	MY	MI	MR	MC	MIC	MRC	MS	MSLL	MSL	MSH	MSHH			MALL	MAL	MAH	MAHH				ML	
N	USER'S CHOICE																									
P	PRESSURE OR VACUUM	PE	PT	PIT	PY	PI	PR	PC	PIC	PRC	PS	PSLL	PSL	PSH	PSHH	PSHL		PALL	PAL	PAH	PAHH		PCV		PL	
PD	DIFFERENTIAL PRESSURE		PDT	PDIT	PDY	PDI	PDR	PDC	PDIC	PDRC	PDS	PDSLL	PDSL	PDSH	PDSHH			PDALL	PDAL	PDAH	PDAHH		PDCV		PDL	
Q	QUANTITY	QE	QT	QIT	QY	QI	QR				QS	QSLL	QSL	QSH	QSHH			QALL	QAL	QAH	QAHH					
R	RADIATION																									
S	SPEED	SE	ST	SIT	SY	SI	SR	SC	SIC	SRC	SS	SSLL	SSL	SSH	SSHH			SALL	SAL	SAH	SAHH					
T	TEMPERATURE	TE	TT	TIT	TY	TI	TR	TC	TIC	TRC	TS	TSLL	TSL	TSH	TSHH	TSHL		TALL	TAL	TAH	TAHH		TCV		TL	
TD	DIFFERENTIAL TEMPERATURE		TDT	TDIT	TDY	TDI	TDR	TDC	TDIC	TDRC	TDS	TDSLL	TDSL	TDSH	TDSHH			TDALL	TDAL	TDAH	TDAHH		TDCV		TDL	
U	MULTIVARIABLE					UI	UR	UC	UIC	URC	US														UL	
V	VISCOSITY	VE	VT	VIT	VY	VI	VR	VC	VIC	VRC	VS	VSLL	VSL	VSH	VSHH			VALL	VAL	VAH	VAHH				VL	
W	WEIGHT	WE	WT	WIT	WY	WI	WR				WS	WSLL	WSL	WSH	WSHH			WALL	WAL	WAH	WAHH					
X	UNCLASSIFIED	XE	XT	XIT	XY	XI	XR	XC	XIC	XRC	XS	XSLL	XSL	XSH	XSHH			XALL	XAL	XAH	XAHH		XCV	XG	XL	
XV	VIBRATION	XVE	XVT		XVY	XVI	XVR				XVS			XVSH	XVSHH					XVAH	XVAHH				XVL	
Y	STATUS					YI																			YL	
Z	POSITION	ZE	ZT	ZIT	ZY	ZI		ZC**			ZS**												ZV		ZL**	

OPERATOR PILOT DEVICE LEGEND

DEVICE TYPE / PILOT DEVICE FUNCTION	LOCAL-OFF-REMOTE (LOR) OR LOCAL-STOP-REMOTE (LSR)	STOP(SP)	START (ST)	HAND-OFF-AUTO (HOA) HAND-OFF-REMOTE (HOR)	OFF-ON (OO)	SELECT (SEL)	OPEN-STOP-CLOSE (OSC)	JOG OPEN-HOLD-CLOSE (JOHC)	SEMIAUTO-AUTO-MANUAL (SAAM)	LEAD-LAG-STANDBY (LLGS)	AUTO-MANUAL (AM)	OPEN-CLOSE (OC)	LOW-HIGH (LH)	RESET (RST)	SPEED (SPD)	START-STOP (STSP)	EQUIPMENT SHUTDOWN (ESD)	BYPASS (BYP)			SILENCE	POSITION (POS)
PILOT DEVICE TAG (HAND SWITCHES)	HSA	HSB	HSC	HSD	HSE	HSF	HSG	HSH	HIS	HSJ	HSM	HSO	HSQ	HSR	HSS	HST	HSU	HSV	HSW	HSX	HSY	HSZ

I/O TYPE DESIGNATIONS

RNG	RUNNING	SPDC	SPEED COMMAND
FAIL	FAILED/FAULT	SPDF	SPEED FEEDBACK
FWD	RUNNING FORWARD	REM	LOR IN REMOTE
FAST	RUNNING HIGH	LOC	LOR IN LOCAL
SLOW	RUNNING LOW	AUTO	HOA IN AUTO
REV	RUNNING REVERSE	HAND	HOA IN HAND
SVC	SOLENOID VALVE CLOSE	RST	RESET
SVO	SOLENOID VALVE OPEN	STOP	STOP
RUN	RUN		
SLWC	MOTOR START LOW		
REVC	MOTOR START REVERSE		

INSTRUMENT TYPE DESIGNATIONS

CGD	COMBUSTIBLE GAS DETECTOR	PTOF	PULSE TIME OF FLIGHT
COND	CONDUCTIVITY	RTD	RESISTANCE TEMP DETECTOR
DO	DISSOLVED OXYGEN	SB	SLUDGE BLANKET
FMCW	FREQ. MODULATED CONT. WAVE	SC	STREAMING CURRENT
ISB	INTRINSIC SAFETY BARRIER	SD	SLUDGE DEPTH
LEL	LOWER EXPLOSIVE LIMIT	TDR	TIME DOMAIN REFLECTOMETRY
MLSS	MIXED LIQUOR SUSPENDED SOLIDS	TOC	TOTAL ORGANIC CARBON
ORG	UV 504	TSS	TOTAL SUSPENDED SOLIDS
ORP	OXIDATION REDUCTION POTENTIAL	TURB	TURBIDITY
PSUB	PRESSURE SUBMERSIBLE	UVI	UV INTENSITY
PC	PARTICLE COUNTER	UVT	UV TRANSMITTANCE

SPECIFIC ABBREVIATIONS

HTR	HEATER
HTU	HEAT TRACE UNIT
MWH	MOTOR WINDING HEATER
SV	SOLENOID VALVE
SPD	SURGE PROTECTIVE DEVICE
UPS	UNINTERRUPTIBLE POWER SUPPLY
YLA	STATUS AUTO PILOT LIGHT
YLR	STATUS REMOTE PILOT LIGHT
YL1	STATUS RUNNING PILOT LIGHT
YL2	ALARM FAILED/FAULT PILOT LIGHT

P&ID LINE SYMBOLS

- INSTRUMENT OR CONNECTION TO PROCESS
- PNEUMATIC SIGNAL
- ELECTRIC SIGNAL
- HYDRAULIC SIGNAL
- CAPILLARY TUBE
- INTERNAL SYSTEM LINK (SOFTWARE OR DATA LINK)

PROCESS LINE SYMBOLS

- PRIMARY PROCESS FLOW IN PIPE
- SECONDARY PROCESS FLOW IN PIPE
- PRIMARY PROCESS FLOW IN CHANNEL
- SECONDARY PROCESS FLOW IN CHANNEL
- HEAT TRACE

DESIGNATIONS

- EQUIPMENT ENCLOSURE
- EXISTING
- FUTURE



MISCELLANEOUS P&ID SYMBOLS

- PROCESS CONTINUATION

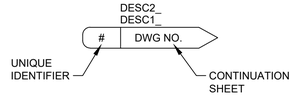

- SIGNAL CONTINUATION

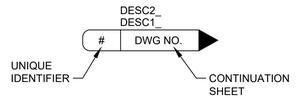

- PIPE CALLOUT



- SCHEMATIC DETAIL



- TYPICAL DETAIL

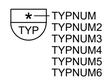

REV	DATE	BY	DESCRIPTION

BID SET

DESIGNED CE
DRAWN CE
CHECKED JM
DATE MAY 2026

COLORADO LICENSED
55107
Digitally signed by Kellen W Gross
Date: 2026.05.04 14:22:24 -06'00'
PROFESSIONAL ENGINEER

carollo

THORNTON WATER PROJECT

CITY OF THORNTON - THORNTON WATER PROJECT

CHEMICAL BUILDING AND PRV VAULTS

INSTRUMENTATION

GENERAL
SYMBOLS & ABBREVIATIONS 2

VERIFY SCALES
BAR IS ONE INCH ON ORIGINAL DRAWING
0 1"
IF NOT ONE INCH ON THIS SHEET, ADJUST SCALES ACCORDINGLY

JOB NO. 204403
DRAWING NO. 00GN02
SHEET NO. 22 OF 168

LAST SAVED BY: DCosme

PROJECT NO. 204403-100000 FILE NAME: 204403_00GN02.dwg

ACTUATORS

- DIAPHRAGM
- ELECTRIC DISCRETE
- ELECTRIC HYDRAULIC
- ELECTRIC MODULATING
- ELECTRIC
- HAND
- HYDRAULIC
- MOTOR
- PNEUMATIC
- SOLENOID

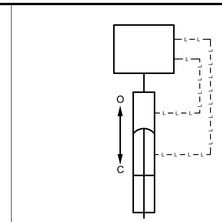

HYDRAULIC MODULATING

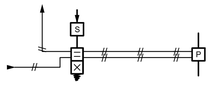

PNEUMATIC SINGLE SOLENOID OPEN/CLOSE

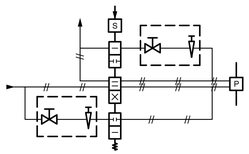

PNEUMATIC SINGLE SOLENOID w/ SPEED CONTROL

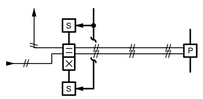

PNEUMATIC DUAL SOLENOID OPEN/CLOSE

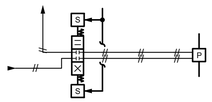

PNEUMATIC DUAL SOLENOID OPEN/HOLD/CLOSE

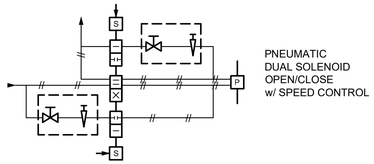

PNEUMATIC DUAL SOLENOID OPEN/CLOSE w/ SPEED CONTROL

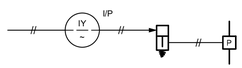

PNEUMATIC MODULATING

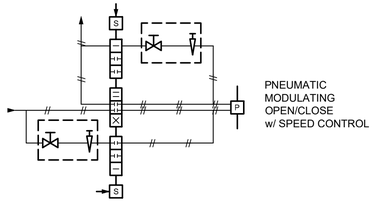

PNEUMATIC MODULATING OPEN/CLOSE w/ SPEED CONTROL

PIPING

- AIR GAP
- BLIND FLANGE
- CAPPED OR PLUGGED
- CONCENTRIC INCREASER
- CONCENTRIC REDUCER
- DRAIN
- ECCENTRIC INCREASER
- FLANGED CONNECTION
- TEE
- UNION
- ECCENTRIC REDUCER
- EXPANSION COUPLING
- EXPANSION JOINT VIBRATION CENTER
- FLEXIBLE CONNECTION
- QUICK DISCONNECT

PUMPS

- AIR DRIVEN
- CENTRIFUGAL
- CHEMICAL FEED DIAPHRAGM
- DIAPHRAGM
- GEAR
- LOBE
- PERISTALTIC OR HOSE
- PISTON
- PROGRESSIVE CAVITY



OR



SUBMERSIBLE

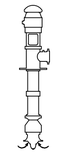

VERTICAL TURBINE



VERTICAL CHOPPER



WATER CHAMP

BLOWERS/ COMPRESSORS/FANS



CENTRIFUGAL SINGLE STAGE BLOWER/FAN

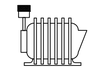

CENTRIFUGAL MULTI STAGE BLOWER

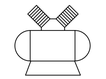

RECIPROCATING COMPRESSOR



SCREW COMPRESSOR



FAN



LIQUID RING COMPRESSOR



ROTARY LOBE BLOWER

CHECK VALVES

- BACK FLOW PREVENTER
- BALL
- DIAPHRAGM CHECK
- DOUBLE FLAP
- FLAPPER
- SLANTING CHECK VALVE
- SPRING LOADED GENERAL
- SPRING LOADED SWING
- SWING

PRESSURE VALVES

- BACKPRESSURE REGULATING SELF CONTAINED
- BACKPRESSURE REGULATING EXTERNAL TAP
- PRESSURE REDUCING SELF CONTAINED
- PRESSURE REDUCING EXTERNAL PRESSURE TAP
- REGULATING
- PRESSURE RELIEF
- VACUUM RELIEF

VALVES

- 3-WAY
- 3-WAY PLUG
- 4-WAY
- AIR-RELIEF
- ANGLE
- BALL
- BALL V-NOTCH
- BUTTERFLY
- BUTTERFLY-BURIED VALVE BOX
- CONE
- DUCKBILL
- DIAPHRAGM
- FLOAT
- GATE
- GATE-BURIED VALVE BOX
- GLOBE
- HOSE
- MISCELLANEOUS
- MUD
- NEEDLE
- PINCH
- PLUG ECCENTRIC
- PLUG ECCENTRIC w-VALVE BOX
- PLUG ECCENTRIC LUBRICATED
- PLUG ECCENTRIC LUBRICATED BURIED VALVE BOX
- PLUG CONCENTRIC
- PLUG CONCENTRIC -BURIED VALVE BOX
- PLUG CONCENTRIC LUBRICATED
- PLUG CONCENTRIC LUBRICATED BURIED VALVE BOX
- PUMP DISCHARGE
- TELESCOPING

VALVE DESIGNATIONS	
NO	NORMALLY OPEN
NC	NORMALLY CLOSED
FO	FAIL OPEN
FC	FAIL CLOSE
FLP	FAIL LAST POSITION

MISC

- AIR / CHEMICAL DIFFUSER
- BASKET STRAINER
- BLOW-OFF SILENCER
- CALIBRATION COLUMN
- COALESCER
- DESICCANT DRYER
- EDUCTOR/EJECTOR
- EQUIPMENT/ INSTRUMENT LOCATOR
- EYEWASH
- FILTER
- FILTER SEPARATOR
- FINE FILTER
- FIRE ALARM/SENSOR
- FLAME ARRESTER
- FLAME ARRESTER w/THERMALLY OPERATED VALVE
- FLOW CONDITIONER
- GAS CANNON
- GRINDER
- HEAT EXCHANGER
- HOIST
- HORIZONTAL MIXER
- HOSE CONNECTION
- INLET STRAINER
- INLINE STATIC MIXER
- INLINE DUCT BALANCING DAMPER
- LOUVER OR BACKDRAFT DAMPER
- MATERIAL CHANGE
- MIXER
- NOZZLE
- ORIFICE RESTRICTION
- PERISTALTIC COMPOSITE SAMPLER
- OR
- PULSATION DAMPENER
- REFRIGERATED DRYER
- RUPTURE DISK
- SAMPLE PORT
- SIGHT TUBE
- SMOKE DETECTOR
- STRAINER - MECHANICALLY CLEANED
- STRAINER WITH BLOW OFF
- STRAINER WYE TYPE
- VAPOR HEATER
- VAPORIZER
- VENT
- VENT TO ATMOSPHERE

REV	DATE	BY	DESCRIPTION
			BID SET

DESIGNED CE
DRAWN CE
CHECKED JM
DATE MAY 2026

COLORADO LICENSED
KELSEN CRAIG
55107
Digitally signed by Kelsen M Craig
Date: 2026.05.08 14:27:37 -06'00'
PROFESSIONAL ENGINEER

carollo

THORNTON WATER PROJECT

CITY OF THORNTON - THORNTON WATER PROJECT

CHEMICAL BUILDING AND PRV VAULTS

INSTRUMENTATION

GENERAL
SYMBOLS & ABBREVIATIONS 3

VERIFY SCALES
BAR IS ONE INCH ON ORIGINAL DRAWING
0 1"
IF NOT ONE INCH ON THIS SHEET, ADJUST SCALES ACCORDINGLY

JOB NO. 204403
DRAWING NO. 00GN03
SHEET NO. 23 OF 168

LAST SAVED BY: DCosme

PROJECT NO. 204403-100000 FILE NAME: 204403_00GN03.dwg

FLOW

- CORIOLIS
- MAGNETIC
- ORIFICE
- PADDLE WHEEL
- PISTON
- ANNUBAR
- PITOT TUBE
- POSITIVE-DISPLACEMENT
- PROPELLER-TURBINE
- ROTAMETER
- SHUTTLE
- THERMAL
- ULTRASONIC
- ULTRASONIC BIOGAS
- V-CONE
- VENTURI TUBE OR FLOW NOZZLE
- VORTEX

FLUMES

- LEOPOLD-LAGCO
- PALMER-BOWLUS
- PARSHALL
- REGULAR CUTTHROAT
- TRAPEZOIDAL

GATES

SIDE VIEW	PLAN VIEW
SLIDE	FLAP
SLUICE	KNIFE
STOP	SLIDE
	SLUICE
	STOP
	WEIR
	BUTTERFLY

LEVELS

- BUBBLER
- CAPACITANCE
- DIFFERENTIAL PRESSURE (TANK)
- DISPLACEMENT
- ELECTRODE
- BALL OR SIDE MOUNT FLOAT
- INVERTED COLUMN
- PROBE
- RADAR PTOF
- RADAR (FREQUENCY MODULATED CONTINUOUS WAVE)
- RADAR TDR
- SUSPENDED/ SUBMERSIBLE
- TUNING FORK
- ULTRASONIC

NETWORKS

CABLE CALLOUTS AND ABBREVIATIONS

- 24/FO-SM — F — F — FIBER LINE REPRESENTS ONE 24-STRAND FIBER OPTIC CABLE
- (2) 24/FO-SM — F — F — FIBER LINE REPRESENTS TWO 24-STRAND FIBER OPTIC CABLES
- (1) 24/FO-SM EA. — F F — EACH FIBER LINE REPRESENTS ONE 24-STRAND FIBER OPTIC CABLE
- (4) — C — C — COPPER LINE REPRESENTS FOUR COPPER ETHERNET CABLES
- (2) EA. — F F — F F — EACH COPPER LINE REPRESENTS TWO COPPER ETHERNET CABLES

FIBER ABBREVIATIONS

##/FO-XX
- ## = STRAND COUNT
- FO = FIBER OPTIC

XX = MODE
- SM = SINGLE MODE
- MM = MULTIMODE

NETWORK ABBREVIATIONS

BMS	= BUILDING MANAGEMENT SYSTEM
BSN	= BUSINESS NETWORK
FCN	= FIELD CONTROL NETWORK
MIN	= MAINTENANCE INFORMATION NETWORK
PCN	= PROCESS CONTROL NETWORK
PLCN	= PLC NETWORK
SCN	= SECURITY CONTROL NETWORK
PCN-W	= WIRELESS PROCESS CONTROL NETWORK
NR	= NETWORK RACK
NP	= NETWORK PANEL
ES	= ETHERNET SWITCH
FPP	= FIBER PATCH PANEL

VLAN SYMBOLS

- = BUSINESS NETWORK
- = SECURITY CONTROL NETWORK
- = BUILDING MANAGEMENT SYSTEM
- = PROCESS CONTROL NETWORK
- = WIRELESS PROCESS CONTROL NETWORK
- = MAINTENANCE INFORMATION NETWORK
- = PLC NETWORK
- = FIELD CONTROL NETWORK

PRESSURE/VACUUM

PRESSURE

- PI — GAUGE
- PSH / PE — PRESSURE SWITCH
- PIT / PE — PRESSURE TRANSMITTER
- MANOMETER

DIFFERENTIAL PRESSURE

- PDI — GAUGE DIFFERENTIAL INDICATOR
- PDSL / PDE — DIFFERENTIAL PRESSURE SWITCH
- PDIT / PDE — DIFFERENTIAL PRESSURE TRANSMITTER

PRESSURE SEALS

- SEAL ANNULAR
- SEAL DIAPHRAGM
- SEAL SANITARY

EXAMPLE

PSH / PE — PRESSURE SWITCH

TEMPERATURE

- TEMPERATURE w/THERMOWELL
- TEMPERATURE GAUGE
- T — THERMOMETER

WEIGHT

- PLATFORM SCALE

WEIRS

SIDE VIEW	PLAN VIEW
RECTANGULAR w/o END CONTRACTIONS	RECTANGULAR w/o END CONTRACTIONS
RECTANGULAR w/ END CONTRACTIONS	RECTANGULAR w/ END CONTRACTIONS
V-NOTCH (TRIANGULAR)	V-NOTCH (TRIANGULAR)
TRAPEZOIDAL (CIPOLLETTI)	TRAPEZOIDAL (CIPOLLETTI)

NETWORK LINE SYMBOLS

COPPER ETHERNET	— C — C — C — C — C — C —
DUPLEX FIBER PATCH	— FP — FP — FP — FP — FP — FP —
FIBER OPTIC ETHERNET	— F — F — F — F — F — F —
WIRELESS	— W — W — W — W — W — W —
PROFIBUS DP	— PBD — PBD — PBD — PBD — PBD — PBD —
PROFIBUS PA	— PBA — PBA — PBA — PBA — PBA — PBA —
SERIAL DATA	—o—o—o—o—o—o—o—o—o—o—o—o—o—o—

MISCELLANEOUS NETWORK SYMBOLS

NETWORK CABLE CONTINUATIONS

TOP OF PAGE STYLE CONTINUATION

DESC 3
DESC 2
DESC 1 — CONTINUATION SHEET
DWG NO. — UNIQUE IDENTIFIER
(#)

BOTTOM/LEFT OF PAGE STYLE CONTINUATION

(#) — UNIQUE IDENTIFIER — CONTINUATION SHEET
DWG NO.
DESC 1
DESC 2
DESC 3

FIELD NETWORK DEVICE

PLC TAG / PANEL TAG — PROTOCOL / SEGMENT #
DEVICE SPECIFIC SYMBOL
TAG
DESC 1
DESC 2
DESC 3
P&ID DRAWING REFERENCE

NETWORK EQUIPMENT CALLOUT

TAG
DESC 1

REV	DATE	BY	DESCRIPTION
			BID SET

DESIGNED CE
DRAWN CE
CHECKED JM
DATE MAY 2026

COLORADO LICENSED — KRISTEN GRACE — 55107 — PROFESSIONAL ENGINEER

carollo

THORNTON WATER PROJECT

CITY OF THORNTON - THORNTON WATER PROJECT

CHEMICAL BUILDING AND PRV VAULTS

INSTRUMENTATION

GENERAL
SYMBOLS & ABBREVIATIONS 4

VERIFY SCALES
BAR IS ONE INCH ON ORIGINAL DRAWING
0 — 1"
IF NOT ONE INCH ON THIS SHEET, ADJUST SCALES ACCORDINGLY

JOB NO. 204403
DRAWING NO. 00GN04
SHEET NO. 24 OF 168

LAST SAVED BY: DCosme

PROJECT NO. 204403-100000 FILE NAME: 204403_00GN04.dwg

DETAIL, REFERENCE & LOCATION DESIGNATIONS

SCHEMATIC NUMBER — SCHEMATIC DESCRIPTION

DESCRIPTION

 # CONTROL SCHEMATIC

TAG ⟷ LOOP
* = XXX ⟷ XXX-
TAG NUMBER — PRIMARY EQUIPMENT LOOP

REFERENCE DWG.
DWG1 DWG2
DWG1 — P&ID REFERENCE
DWG2 — ADDITIONAL REFERENCES

LOCATION LEGEND
XXX IN/AT XXX
XXX — ABBREVIATION
IN/AT XXX — LOCATION DESCRIPTION

TYPICAL TAGGING IDENTIFICATION



TAGGING IDENTIFICATION
1 = TAG: REFER TO THE EQUIPMENT AND INSTRUMENT TAGGING TABLES
2 = DESCRIPTION
3 = LOCATION: REFER TO THE LOCATION LEGEND

ADDITIONAL FIELDS, IF ANY, ARE INDICATED NEXT TO THE RESPECTIVE SYMBOLS

RELAYS



RELAY COIL
a = TYPE
CR = CONTROL RELAY
TD = TIME DELAY RELAY
M = MOTOR STARTER COIL
L = MOTOR STARTER COIL - LOW SPEED
H = MOTOR STARTER COIL - HIGH SPEED
F = MOTOR STARTER COIL - FORWARD
R = MOTOR STARTER COIL - REVERSE

b = TIME DELAY STATE
TDON = TIME DELAY ON ENERGIZATION
TDOFF = TIME DELAY ON DEENERGIZATION

c = TIMING RANGE/SETTING

NORMALLY OPEN CONTROL CONTACT

NORMALLY CLOSED CONTROL CONTACT

NCTC — TIME DELAY CONTACT
NCTC = NORMALLY CLOSED TIMED CLOSING

NCTO — TIME DELAY CONTACT
NCTO = NORMALLY CLOSED TIMED OPENING

NOTO — TIME DELAY CONTACT
NOTO = NORMALLY OPEN TIMED OPENING

NOTC — TIME DELAY CONTACT
NOTC = NORMALLY OPEN TIMED CLOSING

INDICATORS



PILOT LIGHT
a = LENS COLOR
R = RED
G = GREEN
W = WHITE
A = AMBER
B = BLUE
Y = YELLOW
C = CLEAR



PUSH-TO-TEST LIGHT



BEACON



HORN

MOTORS



MOTOR - 1 PHASE
a = HORSEPOWER

MOTOR - 3 PHASE

HAND SWITCHES

NORMALLY OPEN MOMENTARY PUSHBUTTON

NORMALLY CLOSED MOMENTARY PUSHBUTTON

MUSHROOM HEAD PUSHBUTTON NORMALLY OPEN

MUSHROOM HEAD PUSHBUTTON NORMALLY CLOSED

PUSH-PULL PUSHBUTTON MAINTAINED CONTACT

PUSH-PULL PUSHBUTTON NORMALLY CLOSED

PADLOCK SWITCH

PULL CORD SWITCH

STOP-LOCKOUT PUSHBUTTON



THREE POSITION SELECTOR SWITCH
a = POSITION 1
b = POSITION 2
c = POSITION 3
x = DENOTES POSITION CONTACTS CLOSED IN



TWO POSITION SELECTOR SWITCH NORMALLY OPEN



TWO POSITION SELECTOR SWITCH NORMALLY CLOSED



SPRING-RETURN

I/O



PLC DISCRETE
a = INPUT/OUTPUT
b = I/O VOLTAGE



PLC ANALOG



DIGITAL BUS
a = PROTOCOL

PROCESS SWITCHES

LEVEL SWITCH CLOSE ON RISING LEVEL

LEVEL SWITCH OPEN ON RISING LEVEL

PRESSURE SWITCH CLOSE ON RISING PRESSURE

PRESSURE SWITCH OPEN ON RISING PRESSURE

TEMPERATURE SWITCH CLOSE ON RISING TEMPERATURE

TEMPERATURE SWITCH OPEN ON RISING TEMPERATURE

FLOW SWITCH CLOSE ON INCREASE IN FLOW

FLOW SWITCH OPEN ON INCREASE IN FLOW

VIBRATION SWITCH OPEN ON RISING VIBRATION

VIBRATION SWITCH CLOSE ON RISING VIBRATION

TORQUE SWITCH OPEN ON HIGH TORQUE

TORQUE SWITCH CLOSE ON HIGH TORQUE

NORMALLY CLOSED LIMIT SWITCH

NORMALLY CLOSED HELD OPEN LIMIT SWITCH

NORMALLY OPEN LIMIT SWITCH

NORMALLY OPEN HELD CLOSED LIMIT SWITCH

MISCELLANEOUS

VARISTOR

CAPACITOR

RESISTOR

BATTERY

DIODE

MOTOR OVERLOAD HEATERS

OVERLOAD CONTACT

DRAWOUT CONNECTION

GROUND

LIGHTNING ARRESTOR

SOLENOID

CIRCUIT BREAKER

DISCONNECT

FUSE

TRANSIENT SURGE PROTECTION

MOTOR WINDING HEATER

ETM — ELAPSED TIME METER

RTD

a — MISC PORT
a = TYPE

ETHERNET PORT

SPD — SURGE PROTECTION DEVICE

TRANSFORMER LINE/LOAD REACTOR

SPEED SWITCH

SPEED POTENTIOMETER

CONNECTION

NO CONNECTION

SHIELDED WIRE

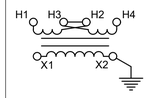

CONTROL POWER TRANSFORMER

REV	DATE	BY	DESCRIPTION
			BID SET

DESIGNED CE
DRAWN CE
CHECKED JM
DATE MAY 2026

COLORADO LICENSED
KRISTEN GROSS
55107
Digitally signed by Kristen W Gross
Date: 2026.05.04 14:20:04 -06'00'
PROFESSIONAL ENGINEER

carollo®

THORNTON WATER PROJECT

CITY OF THORNTON - THORNTON WATER PROJECT
CHEMICAL BUILDING AND PRV VAULTS
INSTRUMENTATION
GENERAL
SCHEMATIC SYMBOLS

VERIFY SCALES
BAR IS ONE INCH ON ORIGINAL DRAWING
0 — 1"
IF NOT ONE INCH ON THIS SHEET, ADJUST SCALES ACCORDINGLY

JOB NO. 204403
DRAWING NO. 00GN05
SHEET NO. 25 OF 168

LAST SAVED BY: DCosme

PROJECT NO. 204403-100000 FILE NAME: 204403_00GN05.dwg

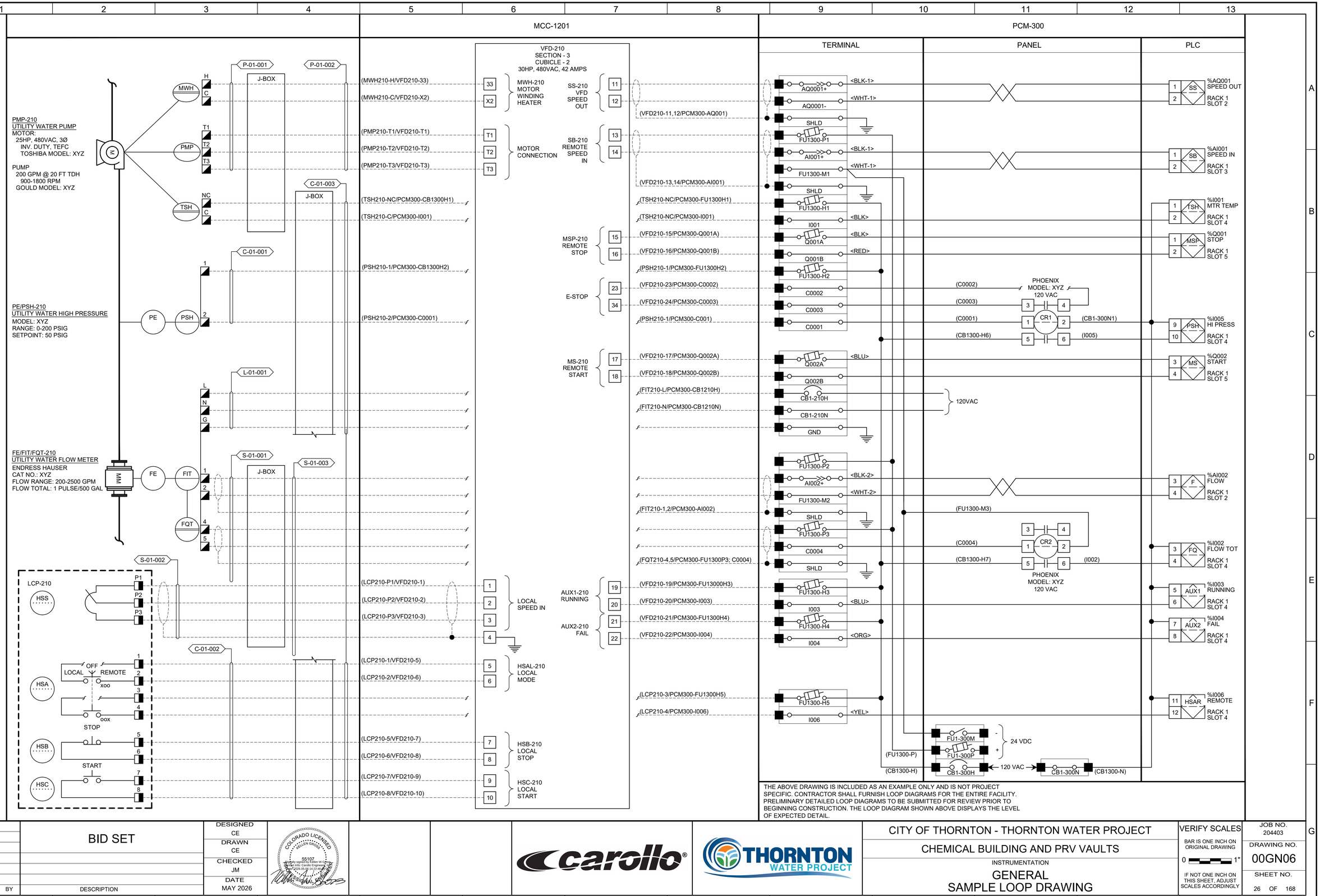

REV	DATE	BY	DESCRIPTION
			BID SET

DESIGNED CE
DRAWN CE
CHECKED JM
DATE MAY 2026

COLORADO LICENSED ALLEN GRIGSBY 55107 Digitally signed by Kristen M Grigsby Date: 2026.05.08 14:22:48 -06'00' PROFESSIONAL ENGINEER

carollo®

THORNTON WATER PROJECT

CITY OF THORNTON - THORNTON WATER PROJECT

CHEMICAL BUILDING AND PRV VAULTS

INSTRUMENTATION

GENERAL
SAMPLE LOOP DRAWING

VERIFY SCALES
BAR IS ONE INCH ON ORIGINAL DRAWING
0 1"
IF NOT ONE INCH ON THIS SHEET, ADJUST SCALES ACCORDINGLY

JOB NO. 204403
DRAWING NO. 00GN06
SHEET NO. 26 OF 168

LAST SAVED BY: DCosme

PROJECT NO. 204403-100000 FILE NAME: 204403_00GN06.dwg

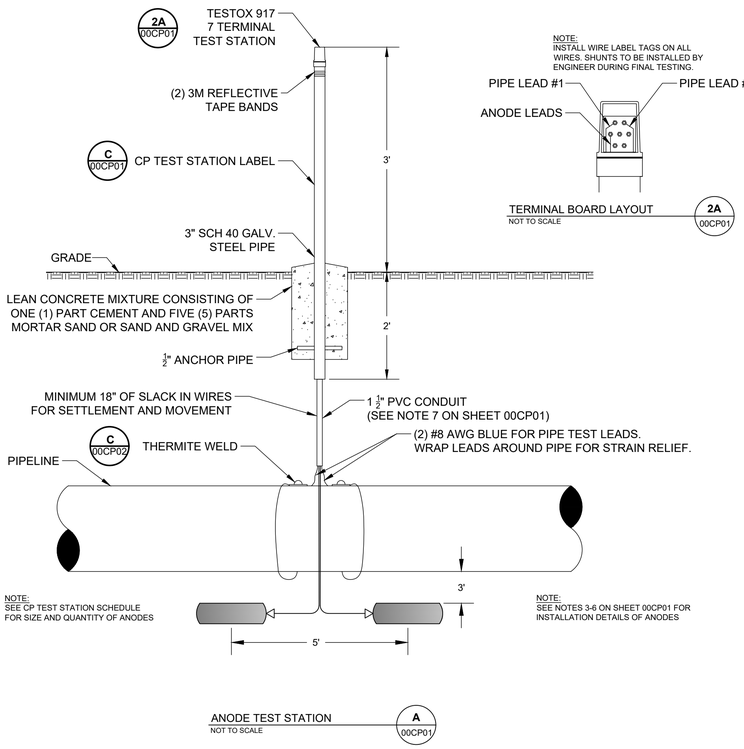

ANODE TEST STATION
NOT TO SCALE — A 00CP01

TERMINAL BOARD LAYOUT
NOT TO SCALE — 2A 00CP01

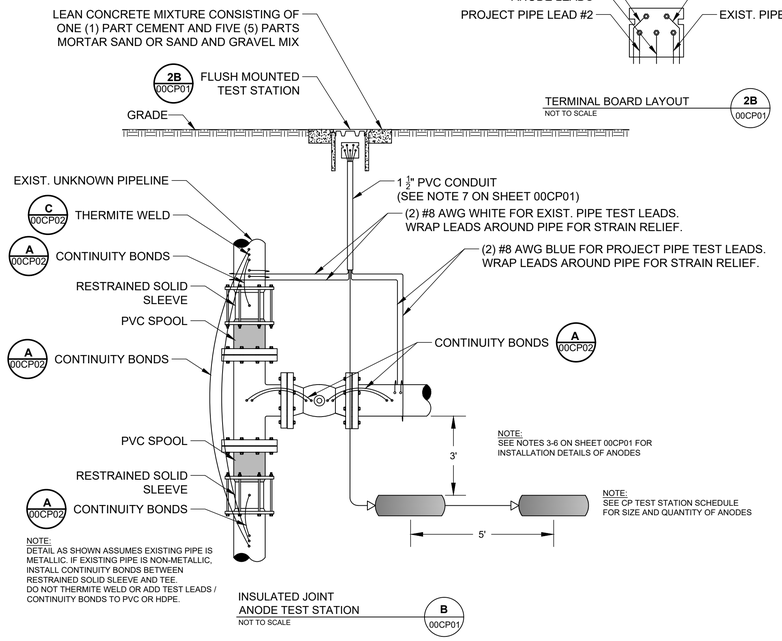

INSULATED JOINT
ANODE TEST STATION
NOT TO SCALE — B 00CP01

TERMINAL BOARD LAYOUT
NOT TO SCALE — 2B 00CP01



CP TEST STATION LABEL
NOT TO SCALE — C 00CP01

THORNTON WATER PROJECT - CHEMICAL BUILDING CP SCHEDULE

LOCATION	OFFSET	TYPE	ANODE QUANTITY	DETAIL/ DRAWING	DESCRIPTION	NOTES/COMMENTS
TIE-IN TO EXISTING	CENTER	FLUSH	2	B / 00CP01	INSULATED JOINT ANODE TS	INSTALL NEXT TO TIE-IN
OUTSIDE CHEMICAL BUILDING	CENTER	POST	2	A / 00CP01	ANODE TS	INSTALL OUTSIDE CHEMICAL BUILDING

THORNTON WATER PROJECT - LCC PRV VAULT CP SCHEDULE

LOCATION	STATIONING	OFFSET	TYPE	ANODE QUANTITY	DETAIL/ DRAWING	DESCRIPTION	NOTES/COMMENTS
INLET TO VAULT	10+50.41	CENTER	POST	2	A / 00CP01	ANODE TS	INSTALL NEXT TO PRV VAULT
OUTLET TO VAULT	10+84.95	CENTER	POST	2	A / 00CP01	ANODE TS	INSTALL NEXT TO PRV VAULT

GENERAL NOTES:

1. CONTRACTOR SHALL IMMEDIATELY NOTIFY THE THORNTON REPRESENTATIVE OF ANY DISCREPANCIES BETWEEN THE PLANS FOR THIS PROJECT AND ACTUAL FIELD CONDITIONS WHICH MAY INTERFERE WITH THIS PROJECT.
2. NO BELOW GRADE SPLICING OF WIRES IS ALLOWED WITHOUT PRIOR APPROVAL FROM THE THORNTON REPRESENTATIVE. CONTRACTOR SHALL ENSURE ALL WIRES ARE OF SUFFICIENT LENGTH FOR EACH INTENDED APPLICATION.
3. REMOVE ANODES FROM PLASTIC OR OTHER SHIPPING BAG AND POSITION ACCORDING TO DETAIL DRAWINGS. DO NOT REMOVE CLOTH SACK. DO NOT PLACE IN PIPE BEDDING.
4. INSTALL ANODES IN NATIVE SOILS A MINIMUM OF 3 FEET FROM EDGE OF PIPE OR ANY OTHER METALLIC OBJECT AND PLACE AT OR BELOW THE INVERT OF THE PIPE.
5. BACKFILL WITH NATIVE SOIL A MINIMUM OF 12 INCHES AROUND ANY ANODES THEN FLOOD EACH WITH A MINIMUM OF 5 GALLONS OF FRESH WATER. AFTER WATER ABSORPTION, CONTINUE BACKFILLING AS PER SPECIFICATIONS.
6. ROUTE ALL TEST LEADS AND ANODE WIRES IN 1 ½ INCH CONDUIT BETWEEN THE PIPE AND THE TEST STATION BASE. THE CONDUIT WILL ALSO AID THE INSTALLER AS THE PIPELINE IS PADDED AND BACKFILLED BY PROVIDING MEANS TO LEAN THE TEST STATION AGAINST THE TRENCH WALL.
7. IF POSSIBLE, INSTALL TEST STATIONS OVER CENTERLINE OF PIPE. PLACE TEST STATIONS IN PROTECTED LOCATIONS (NEXT TO FENCES, APPURTENANCES, OUT OF ROADWAYS, ETC.) OR OTHER EASILY ACCESSIBLE AREAS.
8. PIPELINE CONTRACTOR IS RESPONSIBLE FOR MAINTAINING ELECTRICAL ISOLATION OF THE NEW PIPELINE FROM EXISTING PIPELINES, CONCRETE REBAR, ELECTRICAL GROUNDING, TUNNEL LININGS, PIPE SUPPORTS, OR OTHER METALLIC STRUCTURES.
9. DURING BACKFILL, INSTALL DETECTABLE CATHODIC PROTECTION WARNING TAPE 12-18 INCHES ABOVE ANY CATHODIC PROTECTION WIRES OR DEVICES.
10. TYPICAL CATHODIC PROTECTION WIRE INSULATION COLORS:

BLUE	=	PROJECT PIPE	GREEN	=	METALLIC COUPON
WHITE	=	FUTURE, SERVICE OUTLET OR FOREIGN PIPE	YELLOW	=	REFERENCE ELECTRODE
BLACK	=	STRUCTURE/NEGATIVE CABLES, ANODE LEADS, JOINT/CONTINUITY BONDS			

11. SEE PROJECT SPECIFICATIONS FOR FURTHER INFORMATION.

REV	DATE	BY	DESCRIPTION
			BID SET

DESIGNED MMV
DRAWN MTJ
CHECKED VWJ
DATE MAY 2026

NATIONAL ASSOCIATION OF CORROSION ENGINEERS — MATTHEW M. VAN AUKEN — No. 9232 — REGISTERED — CORROSION PROTECTION SPECIALIST

carollo

THORNTON WATER PROJECT

CITY OF THORNTON – THORNTON WATER PROJECT
CHEMICAL BUILDING AND PRV VAULTS
CATHODIC PROTECTION
GENERAL NOTES AND
TEST STATION SCHEDULE

VERIFY SCALES
BAR IS ONE INCH ON ORIGINAL DRAWING
0 — 1"
IF NOT ONE INCH ON THIS SHEET, ADJUST SCALES ACCORDINGLY

JOB NO. 204403
DRAWING NO. 00CP01
SHEET NO. 27 OF 168

NOMINAL PIPE Ø	MIN WIRE SIZE	# OF WIRES
12" OR LESS	#8	2
13" TO 24"	#4	2

CONTINUITY BONDING NOTES:

1. TYPICAL FOR NON-WELDED PIPING OR WELDED PIPING WITH MECHANICAL COUPLINGS.
2. RHW OR HMWPE BLACK INSULATED STRANDED COPPER BOND WIRES SHALL BE SIZED ACCORDING TO THE FOLLOWING TABLE UNLESS OTHERWISE NOTED.
3. PROVIDE A MINIMUM OF 2" SLACK TO ACCOMMODATE PIPE MOVEMENT.
4. REMOVE SMALL AREA OF COATING AND ENSURE WELD AREA IS FREE OF DUST, DEBRIS, AND COATING PARTICLES PRIOR TO THERMITE WELDING.
5. ENSURE ALL BLOW-OFF AND HYDRANT PIPING ARE BONDED AND ELECTRICALLY CONTINUOUS WITH ADJACENT WATER MAIN (IF METALLIC).
6. DO NOT INSTALL CONTINUITY BONDS ACROSS ANY ISOLATION FLANGE, COUPLING, UNION, OR OTHER ISOLATION DEVICE.
7. TEST EACH CONTINUITY BOND WITH A DLRO METER AFTER INSTALLATION.
8. APPLY ROYSTON HANDY CAP OR APPROVED REPAIRED COATING AFTER STEP 7 IS COMPLETED.
9. COAT ALL EXPOSED AND BARE METALLIC COMPONENTS (THERMITE WELDS, RESTRAINT RODS, NUTS, BOLTS, ETC.) WITH WAX TAPE OR OTHER APPROVED COATING SYSTEM BEFORE BACKFILLING.



VALVE

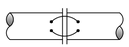

FLANGE TO FLANGE

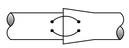

BELL AND SPIGOT

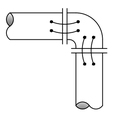

BEND

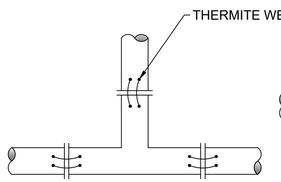

TEE

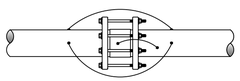

NON-INSULATING COUPLING

CONTINUITY BONDING DETAILS — A — 00CP02

NOTE:
ALL ELECTRICAL ISOLATION FLANGES, COUPLINGS, UNIONS, OR OTHER DEVICES MUST BE PROPERLY TESTED PRIOR TO BACKFILL IN ACCORDANCE WITH SPECIFICATION 264213.

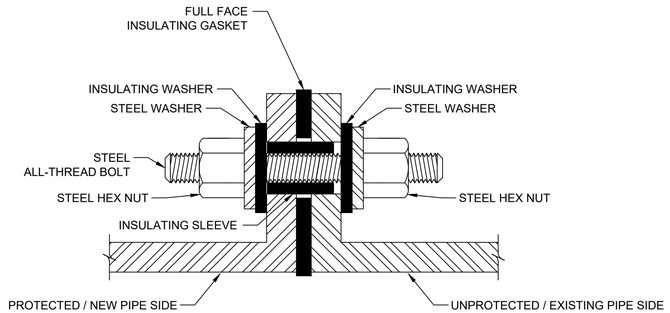

FLANGE ISOLATION KIT DETAIL (DOUBLE WASHER SET FOR ABOVE GRADE OR VAULTED APPLICATIONS) — B — 00CP02
NOT TO SCALE

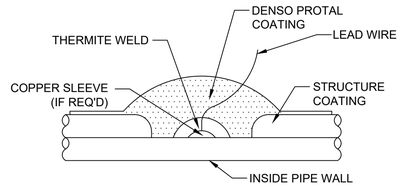

THERMITE WELDING INSTRUCTIONS

1. REMOVE APPROXIMATELY 4" DIAMETER CIRCLE OF PIPELINE COATING AT STRUCTURE CONNECTION LOCATION.
2. CLEAN AREA APPROXIMATELY 2" DIAMETER TO BRIGHT METAL.
3. REMOVE 2" OF INSULATION FROM END OF WIRE.
4. WELD CONDUCTOR TO PIPE. USE APPROPRIATE GRAPHITE MOLD AND CARTRIDGE CHARGE SIZE. COPPER SLEEVES ARE REQUIRED FOR #8 AWG OR SMALLER WIRES.
5. TEST THE THERMITE WELD CONNECTION BY STRIKING THE COMMON SEVERAL BLOWS ON THE SIDE USING A ONE POUND HAMMER. TOP OF WELD MAY BE HAMMERED FLAT IF REQUIRED.
6. APPLY DENSO PROTAL 7125 OR 7200 COATING REPAIR MATERIAL TO ALL EXPOSED METAL AT THERMITE WELD ATTACHMENT SITE PER MANUFACTURER INSTRUCTIONS..

THERMITE WELDING DETAILS — C — 00CP02
NOT TO SCALE

NOTE:
ALL ELECTRICAL ISOLATION FLANGES, COUPLINGS, UNIONS, OR OTHER DEVICES MUST BE PROPERLY TESTED PRIOR TO BACKFILL IN ACCORDANCE WITH SPECIFICATION 264213.

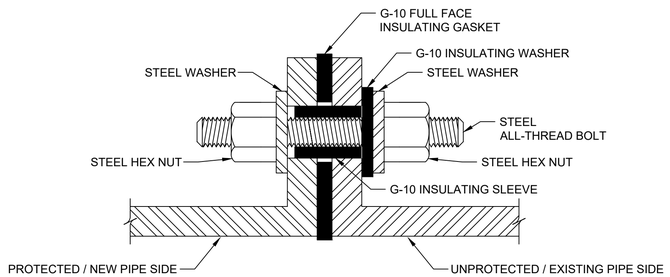

FLANGE ISOLATION KIT DETAIL (SINGLE WASHER SET FOR ABOVE GRADE OR VAULTED APPLICATIONS) — D — 00CP02
NOT TO SCALE

REV	DATE	BY	DESCRIPTION
			BID SET

DESIGNED MMV
DRAWN MTJ
CHECKED VWJ
DATE MAY 2026

NATIONAL ASSOCIATION OF CORROSION ENGINEERS — MATTHEW M. VAN AUKEN — No. 9232 — REGISTERED — CATHODIC PROTECTION SPECIALIST

carollo

THORNTON WATER PROJECT

CITY OF THORNTON - THORNTON WATER PROJECT

CHEMICAL BUILDING AND PRV VAULTS

CATHODIC PROTECTION

STANDARD DETAILS

VERIFY SCALES
BAR IS ONE INCH ON ORIGINAL DRAWING
0 — 1"
IF NOT ONE INCH ON THIS SHEET, ADJUST SCALES ACCORDINGLY

JOB NO. 204403
DRAWING NO. 00CP02
SHEET NO. 28 OF 168

DISCONNECT SCHEDULE

11/19/2025

TAG	VOLTAGE	POLES	AMPS	NEMA TYPE	TYPE	HORSEPOWER	FUSE SIZE	BREAKER AF/AT	ACCESSORIES
B	600 VAC	3P	30A	4X-SS	NON-FUSED				
C	240 VAC	2P	30A	4X-SS	FUSED		15A		
Q	120 VAC	1P		4X-SS	MAN. STARTER w/o OL	1			

ACCESSORIES
1= "B" TYPE ELECTRICAL INTERLOCK FOR POSITION INDICATION
2= INSULATED GROUNDABLE NEUTRAL KIT
3= DRAIN AND BREATHER KIT WHEN OUTDOORS
4= EARLY BREAK AUXILIARY CONTACT

LUMINAIRE SCHEDULE

11/19/2025

ITEM	DESCRIPTION	MOUNTING METHOD	LAMP		LUMINAIRE SPECIFICATIONS			
			QUANTITY	TYPE	MANUFACTURER	CATALOG	VOLTS	VA
A1	PHUZION LED HIGH BAY, MAXIMUM AMBIENT RATING 65°C, 0-10V DIMMING CSA CERTIFIED FOR DAMP LOCATION USE	PENDANT	N/A	LED 4000K CCT	HOLOPHANE	PHZ 12000LM WD MVOLT 40K 80CRI PM DBXD	120	81
A2	PHUZION LED HIGH BAY, MAXIMUM AMBIENT RATING 65°C, 0-10V DIMMING CSA CERTIFIED FOR DAMP LOCATION USE, EMERGENCY BATTERY PACK	PENDANT	N/A	LED 4000K CCT	HOLOPHANE	PHZ 12000LM WD MVOLT 40K 80CRI PM DBXD	120	81
B1	EVT4 LED, SEALED, AND GASKETED LED LUMINAIRE, CLEAR POLYCARBONATE LENS 80 CRI, SUITABLE FOR WET LOCATIONS, w/ HIGH EFFICIENCY LEDs FOR AMBIENT TEMPERATURES -29 TO 40 DEG C, L80 0-10V DIMMING	CEILING MOUNT	N/A	LED 4000K CCT 3810 LUMENS	HOLOPHANE	EVT4 4000LM PCL WD MVOLT GZ10 40K 80 CRI	120	33
B2	EVT4 LED, SEALED, AND GASKETED LED LUMINAIRE, CLEAR POLYCARBONATE LENS 80 CRI, SUITABLE FOR WET LOCATIONS, w/ HIGH EFFICIENCY LEDs FOR AMBIENT TEMPERATURES 0 TO 30 DEG C, L80 0-10V DIMMING WITH BODINE EMERGENCY BATTERY PACK	CEILING MOUNT OR SUSPENDED AS NEEDED	N/A	LED 4000K CCT 3810 LUMENS	HOLOPHANE	EVT4 4000LM PCL WD MVOLT GZ10 40K 80 CRI BSL722	120	33
C	DELEON DLTL EXIT LIGHT EL94V-0 FLAME RATING, WET LOCATION LISTED, TEMPERATURE RATING OF -20°C TO 50°C	WALL	N/A	LED	HOLOPHANE	DLTL W 1 G EL	MVOLT	4
D1	D-SERIES 1 WALLPACK, TEMPERATURE RATING OF -40°C, IP65 RATED, EMERGENCY BATTERY PACK, INTEGRATED MOTION SENSOR	WALL	N/A	LED 3000K CCT	LITHONIA	DSXW1 LED P2 40K 80CRI T3M MVOLT BBW PIR1FC3V DBLXD	MVOLT	15
D2	D-SERIES 1 WALLPACK, TEMPERATURE RATING OF -40°C, IP65 RATED, EMERGENCY BATTERY PACK, PHOTOCELL ACCESSORY	WALL	N/A	LED 3000K CCT	LITHONIA	DSXW1 LED P2 40K 80CRI T3M MVOLT BBW PE DBLXD	MVOLT	15
E	OLVT SERIES VAPOR TIGHT LED, TEMPERATURE RATING OF -40°C, CAST ALUMINUM HOUSING WITH CORROSION RESISTANT FINISH, INTEGRATED WET LOCATION JUNCTION BOX	WALL	N/A	LED 4000K CCT	LITHONIA	OLVTWM	MVOLT	15

ELECTRICAL HANDHOLE SCHEDULE

5/5/2026

TAG NO	MINIMUM INTERIOR DIMENSIONS (INCHES)			CONSTRUCTION	TYPICAL DETAIL	SURFACE LOADING	COMMENTS
	WIDTH	LENGTH	DEPTH				
HH-201	24	24	24	POLYMER CONCRETE	EM052	SIDEWALK	
HH-301	24	24	24	POLYMER CONCRETE	EM052	SIDEWALK	
HH-501	60	60	60	PRECAST	EM056	SIDEWALK	
HH-502	60	60	60	PRECAST	EM056	SIDEWALK	
HH-503	60	60	60	PRECAST	EM056	SIDEWALK	
HH-551	24	24	24	POLYMER CONCRETE	EM052	ROADWAY	

NOTES:
1. SEE SPECIFICATION 33_71_21 FOR PRECAST ELECTRICAL HANDHOLES.

REV	DATE	BY	DESCRIPTION
			BID SET

DESIGNED KWG
DRAWN ASH
CHECKED SLB
DATE MAY 2026

COLORADO LICENSED
KRISTEN GROAT
55107
PROFESSIONAL ENGINEER

CITY OF THORNTON - THORNTON WATER PROJECT
CHEMICAL BUILDING AND PRV VAULTS
ELECTRICAL
ELECTRICAL SCHEDULES

VERIFY SCALES
BAR IS ONE INCH ON ORIGINAL DRAWING
0 1"
IF NOT ONE INCH ON THIS SHEET, ADJUST SCALES ACCORDINGLY

JOB NO. 204403
DRAWING NO. 00E01
SHEET NO. 29 OF 168

$$$$DATE$$$$
$$$$USER$$$$
$$$$PLOT_INFO$$$$
LAST SAVED BY: SBoyd

PROJECT NO. 200417-100000 FILE NAME: 20041700E02.dgn

Plot Date: 5/4/2026 6:38:57 AM

HT PARTERRE LAND LP
PN #0157120101007

2 10' HIGH PLAINS WATER USERS ASSOCIATION RIGHT-OF-WAY BOOK 846 PAGE 214

2" W

5" W

N. LINE, SE 1/4 SEC. 20

ELECTRICAL CONDUIT

FO CABLE VAULT

TWP-27-A

INSTRUMENT VAULT

4 ACTIVE CONSTRUCTION ZONE

1

A
-

50'-0"

CELL TOWER

UTILITY TRANSFORMER AND METER

ACCESS ROAD

8" ST

60'-0"

2 QUEBEC ST.
ROAD PETITION #500
COUNTY COMMISSIONER'S
BOOK 1, PAGE 379

CITY OF THORNTON
PN #0157120401001

42" RW

SE 1/4 SEC. 20,
T.1S, R.67W, 6TH P.M.

CUNNINGHAM JULIE
PN #0157120000008

DENCKLAU JAMES R
PN #0157120001001

N 225295.43
E 167013.21

N 225295.43
E 167056.87

CF160
TYP
(TYP OF 4)

CF202
TYP

N 225264.74
E 167013.21

N 225264.74
E 167056.87

1
30C05
3

A ENLARGED PLAN
SCALE: 1" = 20'
FILE: 204403_00C0163

GENERAL NOTES:

1. BASIS OF SURVEY: NAD 1983/2011 AND NAVD88. SEE SURVEY CONTROL DIAGRAM FOR MORE DETAILED DESCRIPTION.
2. SEE ELECTRICAL PLANS FOR ELECTRICAL EQUIPMENT AND CONDUIT DETAILS.

X KEY NOTES:

1. MAINTAIN EXISTING ACCESS ROAD DURING CONSTRUCTION AND RESTORE TO PRE-CONSTRUCTION CONDTIONS.
2. LIMITS OF CONSTRUCTION SHALL NOT ENCROACH ON HIGH PLAINS WATER USERS EASEMENT AREA OR ROADWAY ROW.
3. 16' WIDE DUAL SWING STEEL GATE.
4. SEGMENT A CONSTRUCTION COMPLETION ANTICIPATED AROUND JUNE 2026. AREA NOT ANTICIPATED TO BE ACTIVE CONSTRUCTION AFTER THIS DATE.

811 Know what's below. Call before you dig.

Call before you Overhead

KEY MAP

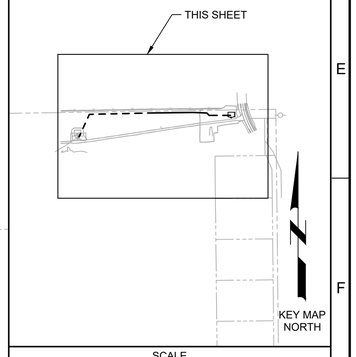

SCALE

0 25' 50' 100'
SCALE: 1" = 50' (HORIZ)

REV	DATE	BY	DESCRIPTION
			BID SET

DESIGNED CDH
DRAWN CDH
CHECKED JJK
DATE MAY 2026

COLORADO LICENSED PROFESSIONAL ENGINEER 55165 Digitally signed by Courtney D. Husted Date: 2026.04.15 15:31:45-06'00'

carollo

THORNTON WATER PROJECT

CITY OF THORNTON - THORNTON WATER PROJECT
CHEMICAL BUILDING AND PRV VAULTS
CIVIL
SIGNAL HILL INSTRUMENT - SITE CIVIL PLAN

VERIFY SCALES
BAR IS ONE INCH ON ORIGINAL DRAWING
0 1"
IF NOT ONE INCH ON THIS SHEET, ADJUST SCALES ACCORDINGLY

JOB NO. 204403
DRAWING NO. 20C01
SHEET NO. 30 OF 168

LAST SAVED BY: CHusted

PROJECT NO. 204403-100000 FILE NAME: 204403_20C01.dwg

Plot Date: 5/4/2026 6:39:36 AM

CITY OF THORNTON EROSION AND SEDIMENT CONTROL NOTES:

1. CONTROL MEASURES SHALL BE INSTALLED BEFORE ANY EARTH DISTURBING ACTIVITIES COMMENCE.
2. THE OWNER/CONTRACTOR SHALL NOTIFY THE THORNTON INSPECTOR ONCE ALL INITIAL CONTROL MEASURES HAVE BEEN INSTALLED FOR AN INITIAL INSPECTION AT LEAST FORTY EIGHT (48) HOURS PRIOR TO THE INSPECTION. CONSTRUCTION ACTIVITY CANNOT BEGIN UNTIL A PASSING INITIAL INSPECTION HAS OCCURRED.
3. ALL CONTROL MEASURES SHALL BE INSTALLED PER THE APPROVED PLAN. SHOULD ALTERNATIVE CONTROL MEASURES BE DESIRED AT ANY POINT, A RESPONSIBLE PARTY SHALL NOTIFY THE CITY FOR APPROVAL.
4. STORMWATER DISCHARGES FROM CONSTRUCTION ACTIVITIES SHALL NOT CAUSE, HAVE THE REASONABLE POTENTIAL TO CAUSE, OR MEASURABLY CONTRIBUTE TO EXCEED ANY WATER QUALITY STANDARD.
5. CONSTRUCTION SHALL BE PHASED IN A MANNER TO LIMIT EARTH DISTURBING ACTIVITIES (I.E. THE ENTIRE PROJECT SITE SHOULD NOT BE DISTURBED IF CONSTRUCTION WILL ONLY BE OCCURRING IN ONE PARTICULAR SECTION).
6. SEDIMENT CAUSED BY ACCELERATED SOIL EROSION SHALL BE REMOVED FROM RUNOFF WATER BEFORE IT LEAVES THE CONSTRUCTION SITE.
7. BULK STORAGE STRUCTURES FOR PETROLEUM PRODUCTS AND ANY OTHER CHEMICALS SHALL HAVE SECONDARY CONTAINMENT OR EQUIVALENT PROTECTION TO CONTAIN ALL SPILLS AND PREVENT ANY SPILLED MATERIAL FROM ENTERING THE MS4 OR STATE WATERS.
8. A COPY OF THE SWMP AND EROSION AND SEDIMENT CONTROL (ESC) PLANS MUST BE AVAILABLE AT ALL TIMES ON THE CONSTRUCTION SITE UNLESS OTHERWISE APPROVED BY CDPHE OR THORNTON.
9. THE SWMP AND EC PLAN SHALL BE CONTINUOUSLY UPDATED TO REFLECT NEW OR REVISED CONTROL MEASURES (CM) DUE TO CHANGES IN DESIGN, CONSTRUCTION, OPERATION, OR MAINTENANCE OF THE CONSTRUCTION SITE. UPDATES MUST BE MADE WITHIN 72-HOURS FOLLOWING THE CHANGE IN CONTROL MEASURES.
10. THE OWNER/CONTRACTOR SHALL INSPECT THE CONSTRUCTION SITE (INCLUDING ALL CONTROL MEASURES, STORAGE CONTAINERS, AND CONSTRUCTION EQUIPMENT) AT A MINIMUM OF EVERY 7 CALENDAR DAYS OR EVERY 14 CALENDAR DAYS. IF ON THE 14 DAY FREQUENCY A 24-HOUR POST STORM INSPECTION MUST BE CONDUCTED AFTER A PRECIPITATION EVENT OR SNOW MELT. INSPECTIONS SHALL CONTINUE UNTIL AN INACTIVATION NOTICE IS FILED WITH CDPHE.
11. THE OWNER/CONTRACTOR SHALL KEEP A RECORD OF ALL INSPECTIONS ON SITE AND AVAILABLE FOR REVIEW BY CDPHE OR CITY STAFF. INSPECTION REPORTS MUST IDENTIFY ANY INCIDENTS OF NON-COMPLIANCE WITH THE TERMS AND CONDITIONS OF THE PERMIT.
12. CONTROL MEASURES REQUIRING MAINTENANCE OR ADJUSTMENT SHALL BE REPAIRED IMMEDIATELY AFTER OBSERVATION OF THE FAILING CONTROL MEASURE.
13. SILT FENCE PATCHING: PATCHING IS ONLY ALLOWED ON THE TOP HALF OF THE FENCE. NOT MORE THAN TWO (2) PATCHES PER SECTION OF FENCE. SILT FENCE WITH HOLES OR DETERIORATION ON THE LOWER HALF OF THE FENCE MUST BE REPLACED. REPAIR TYPICALLY INVOLVES REPLACING THE SILT FENCE TO MAINTAIN THE CMS EFFECTIVENESS TO DRAIN SLOWLY AND FUNCTION AS ORIGINALLY DESIGNED.
14. REINFORCED OR SUPPLEMENTED CONTROL MEASURES ARE REQUIRED ALONG ALL DRAINAGEWAYS OR CONVEYANCES.
15. FOR ALL INSTANCES OF NONCOMPLIANCE BASED ON ENVIRONMENTAL HAZARDS AND CHEMICAL SPILLS AND RELEASES, ALL NEEDED INFORMATION MUST BE PROVIDED ORALLY TO CDPHE SPILL REPORTING LINE (24-HOUR NUMBER FOR ENVIRONMENTAL HAZARDS AND CHEMICAL SPILLS AND RELEASES: 1-877-518-5608) WITHIN 24-HOURS FROM THE TIME THE OWNER/CONTRACTOR BECOMES AWARE OF THE CIRCUMSTANCES.
16. STRAW BALES SHALL NOT BE USED FOR PRIMARY EROSION OR SEDIMENT CONTROL (I.E. STRAW BALES MAY BE USED FOR REINFORCEMENT BEHIND ANOTHER BMP SUCH AS SILT FENCE).
17. CONTROL MEASURES REFERRED TO AS "CUTBACK CURB" ARE NOT ALLOWED. THE CUTBACK CURB MAY BECOME INEFFECTIVE AND MAY ALSO COMPROMISE THE INTEGRITY OF THE CURB AND IN MOST CASES DOES NOT PROVIDE ANY WATER QUALITY BENEFIT FOR FILTERING OUT SEDIMENT.
18. INLET PROTECTION AND VEGETATIVE BUFFER CONTROL MEASURES SHALL NOT BE USED AS STANDALONE CMS. THESE METHODS MUST BE UTILIZED WITH AT LEAST ONE ADDITIONAL CM.
19. CONTROL MEASURES INTENDED FOR SHEET FLOW SEDIMENT RUNOFF SHALL BE PLACED PARALLEL TO THE SLOPE.
20. ALL CONTROL MEASURES SHALL BE CLEANED WHEN SEDIMENT LEVELS ACCUMULATE TO HALF THE DESIGN OF THE CM UNLESS OTHERWISE SPECIFIED.
21. A VEHICLE TRACKING CONTROL (VTC) SHALL BE PLACED AT ALL ENTRANCES/EXITS FROM THE SITE AS WELL AS ANY EGRESS FROM EXPOSED DIRT TO PAVED AREAS TO PREVENT TRACK-OUT ONTO STREETS. IF TRACK-OUT DOES OCCUR, THE OWNER/CONTRACTOR SHALL IMMEDIATELY SWEEP THE STREET OF DEBRIS. RECYCLED CRUSHED CONCRETE OR ASPHALT SHALL NOT BE USED FOR VEHICLE TRACKING PADS.
22. FOR RESIDENTIAL PROJECTS, BACK OF CURB PROTECTION IS REQUIRED ALONG ALL INTERIOR LOTS.
23. ALL SEDIMENT COLLECTED IN CONTROL MEASURES SHALL BE REMOVED UPON INITIAL ACCEPTANCE.
24. USAGE OF RECYCLED CONCRETE IS PROHIBITED THROUGHOUT THE SITE. THIS INCLUDES BUT IS NOT LIMITED TO ANY USAGE IN THE VICINITY OF A TREATMENT FEATURE, STAGING OR TEMPORARY ROADWAY MATERIAL, OR AS PART OF MAINTENANCE ACCESS ROADS.
25. WIND EROSION AND DUST CONTROL MEASURES MUST BE UTILIZED TO MINIMIZE AIRBORNE PARTICULATE DUST. CONTROL MEASURES MAY INCLUDE MINIMIZING DISTURBED AREAS, WATERING, AND/OR PROVIDING TEMPORARY STABILIZATION.
26. FOR ALL USAGE OF ROLLED EROSION CONTROL PRODUCTS, ONLY BIODEGRADABLE NETTING AND STAKES SHALL BE USED.
27. PERMANENT EROSION CONTROL MEASURES FOR SLOPES, CHANNELS, DITCHES, OR ANY DISTURBED LAND AREA SHALL BE COMPLETED WITHIN 14 CALENDAR DAYS AFTER FINAL GRADING OR THE FINAL EARTH DISTURBANCE HAS BEEN COMPLETED. WHEN IT IS NOT POSSIBLE TO PERMANENTLY STABILIZE A DISTURBED AREA AFTER AN EARTH DISTURBANCE HAS BEEN COMPLETED OR WHERE SIGNIFICANT EARTH DISTURBANCE ACTIVITY CEASES, TEMPORARY SOIL EROSION CONTROL MEASURES SHALL BE IMPLEMENTED WITHIN 14 CALENDAR DAYS. TEMPORARY EROSION CONTROL MEASURES SHALL BE MAINTAINED UNTIL PERMANENT SOIL EROSION MEASURES ARE IMPLEMENTED.
28. FINAL STABILIZATION HAS BEEN ACHIEVED WHEN ALL EARTH DISTURBING ACTIVITIES AT THE SITE HAVE BEEN COMPLETED, AND UNIFORM VEGETATIVE COVER HAS BEEN ESTABLISHED WITH AN INDIVIDUAL PLANT DENSITY OF AT LEAST 70 PERCENT OF PRE-DISTURBANCE LEVELS, OR EQUIVALENT PERMANENT, PHYSICAL EROSION REDUCTION METHODS HAVE BEEN EMPLOYED.
29. CITY OF THORNTON RECOMMENDS TEMPORARY OR PERMANENT IRRIGATION WHERE APPROPRIATE TO ACHIEVE FUNCTIONALITY.
30. ALL TEMPORARY CONTROL MEASURES SHALL BE REMOVED FROM THE SITE UPON SUBMITTING THE INACTIVATION NOTICE.
31. ALL SITE WASTES (INCLUDING TRASH AND BUILDING MATERIALS) MUST BE PROPERLY MANAGED TO PREVENT POTENTIAL POLLUTION DISCHARGES TO THE MS4 OR STATE WATERS.
32. STREET REPAIR OPERATIONS SUCH AS ROTOR MILLING, SLURRY SEAL AND CHIP SEAL. THE MINIMUM CMS REQUIRED ARE; INLET PROTECTION, CURB SOCKS AND STREET SWEEPING.

CITY OF THORNTON BMP LEGEND:

CF		CONSTRUCTION FENCE
IPC		CULVERT INLET PROTECTION
LOC	LOC	LIMITS OF CONSTRUCTION
SCL		SEDIMENT CONTROL LOG
SM		SEEDING AND MULCHING
SSA		STABILIZED STAGING AREA
VTC		VEHICLE TRACKING CONTROL

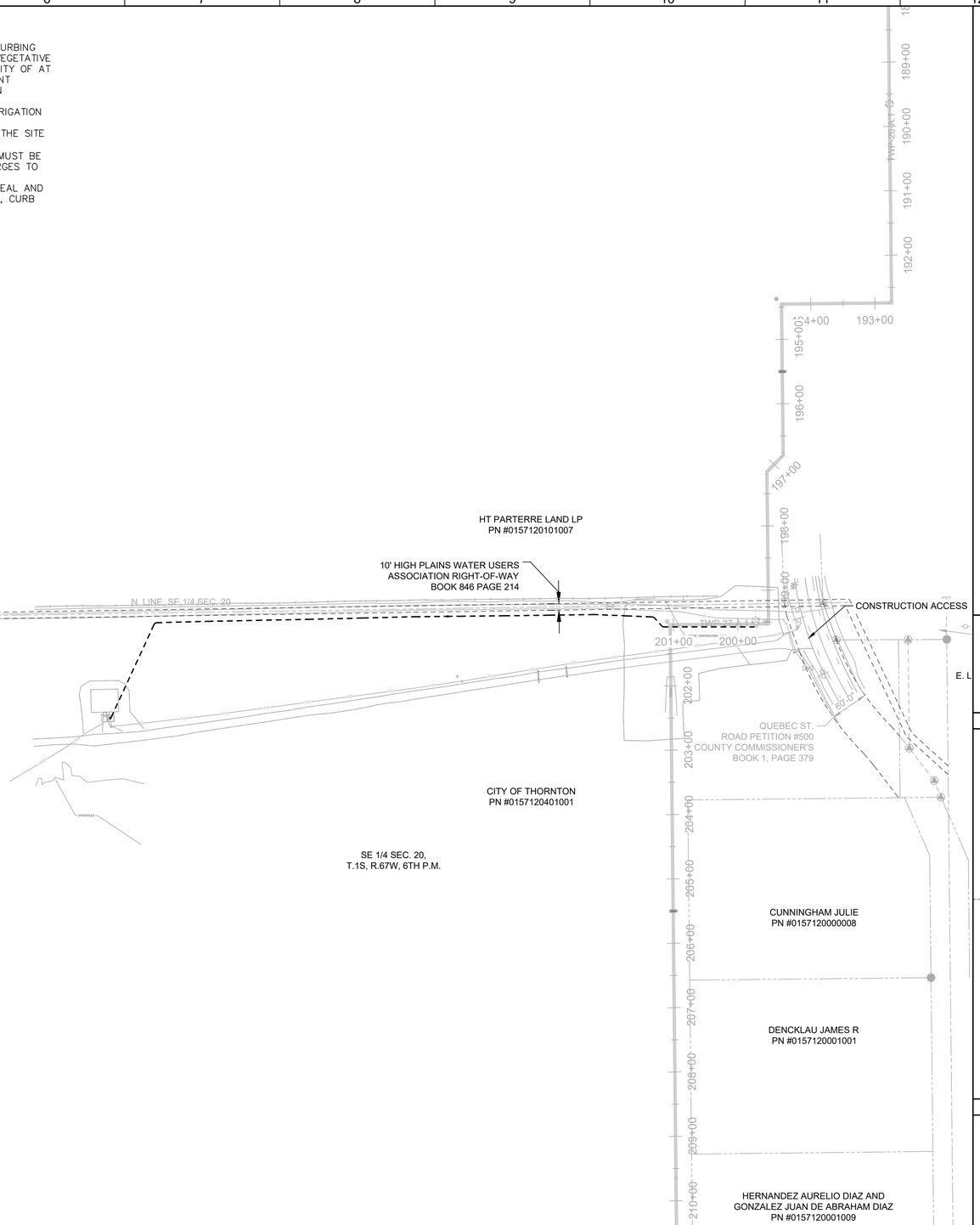

GENERAL NOTES:

1. BASIS OF SURVEY: NAD 1983/2011 AND NAVD88. SEE SURVEY CONTROL DIAGRAM FOR MORE DETAILED DESCRIPTION.

811 Know what's below. Call before you dig.

Call before you Overhead

KEY MAP

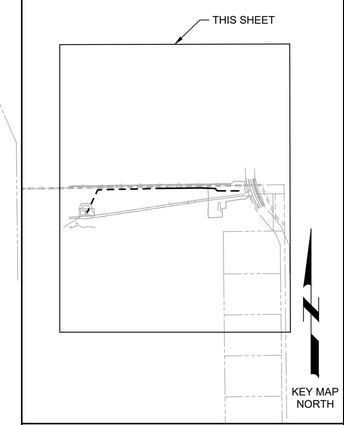

SCALE

0 50' 100' 400'

SCALE: 1" = 100' (HORIZ)

REV	DATE	BY	DESCRIPTION
			BID SET

DESIGNED CDH
DRAWN CDH
CHECKED JJK
DATE MAY 2026

COLORADO LICENSED PROFESSIONAL ENGINEER — COURTNEY D. HUSTED — 55165 — Digitally signed by Courtney D. Husted — Date: 2026.05.04 15:32:02 -06'00'

carollo®

THORNTON WATER PROJECT

CITY OF THORNTON - THORNTON WATER PROJECT

CHEMICAL BUILDING AND PRV VAULTS

CIVIL

SIGNAL HILL INSTRUMENT - EROSION CONTROL NOTES, LEGEND, AND ACCESS MAP

VERIFY SCALES
BAR IS ONE INCH ON ORIGINAL DRAWING
0 1"
IF NOT ONE INCH ON THIS SHEET, ADJUST SCALES ACCORDINGLY

JOB NO. 204403
DRAWING NO. 20EC01
SHEET NO. 31 OF 168

LAST SAVED BY: CHusted

PROJECT NO. 200417-100000 FILE NAME: 204403_20EC01.dwg

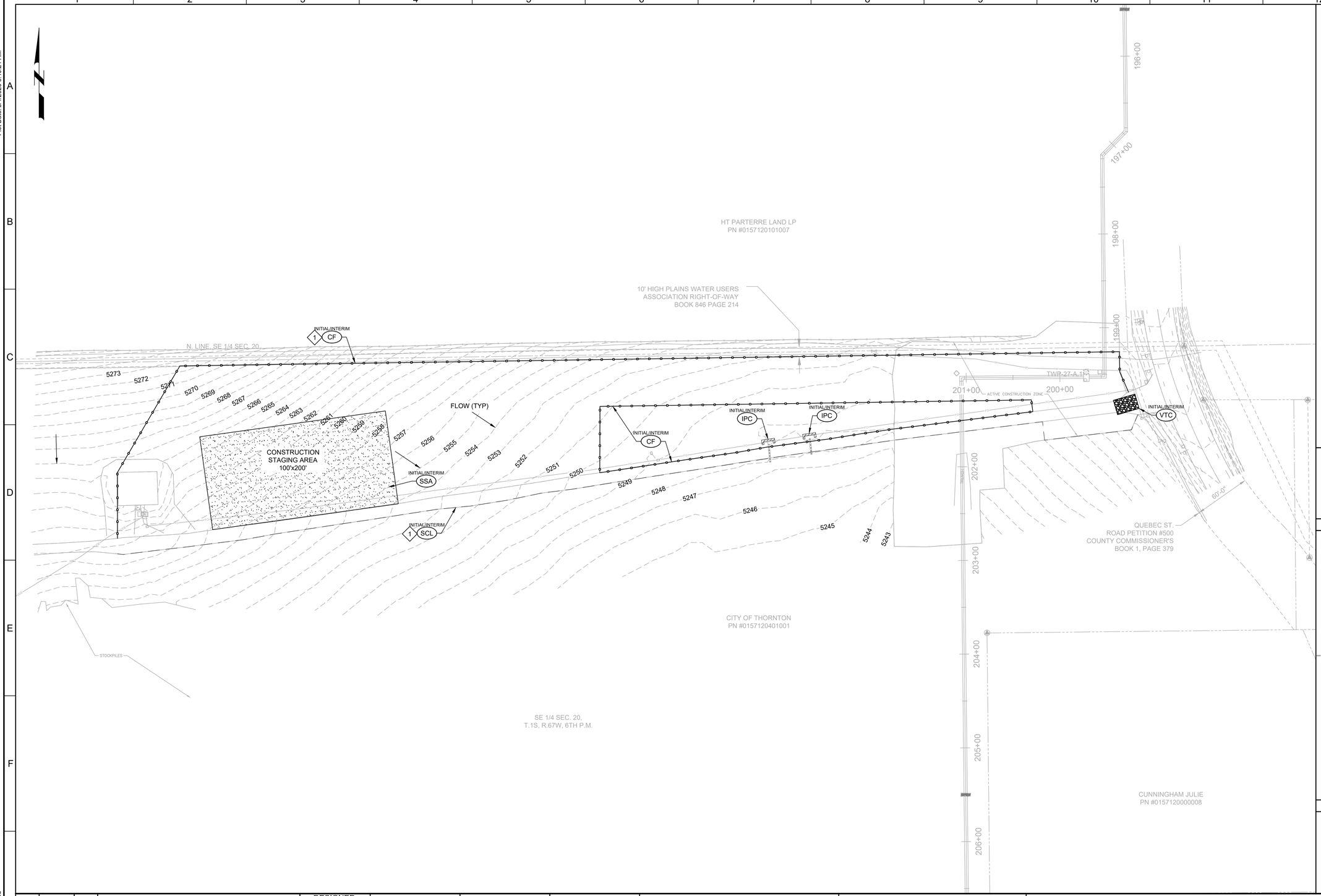

GENERAL NOTES:

1. BASIS OF SURVEY: NAD 1983/2011 AND NAVD88. SEE SURVEY CONTROL DIAGRAM FOR MORE DETAILED DESCRIPTION.

KEY NOTES:

1. INSTALL CONSTRUCTION FENCE OR SEDIMENT CONTROL LOG AS INDICATED ALONG OF LIMITS OF CONSTRUCTION AS SHOWN. TERMINATE AT ACCESS ROAD CROSSINGS.

811 Know what's below. Call before you dig.

Call before you Overhead

KEY MAP

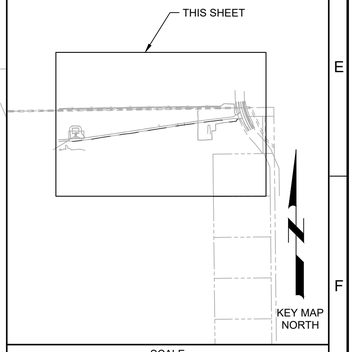

SCALE

0 25' 50' 100'

SCALE: 1" = 50' (HORIZ)

REV	DATE	BY	DESCRIPTION
			BID SET

DESIGNED RJF
DRAWN RJF
CHECKED JJK
DATE MAY 2026

COLORADO LICENSED
COURTNEY D. TUCKER
55165
PROFESSIONAL ENGINEER

carollo

THORNTON WATER PROJECT

CITY OF THORNTON - THORNTON WATER PROJECT

CHEMICAL BUILDING AND PRV VAULTS

CIVIL

SIGNAL HILL INSTRUMENT - EROSION CONTROL PLAN INITIAL/INTERIM

VERIFY SCALES
BAR IS ONE INCH ON ORIGINAL DRAWING
0 1"
IF NOT ONE INCH ON THIS SHEET, ADJUST SCALES ACCORDINGLY

JOB NO. 204403
DRAWING NO. 20EC02
SHEET NO. 32 OF 168

Plot Date: 5/4/2026 6:40:21 AM

LAST SAVED BY: CHusted

PROJECT NO. 200417-100000 FILE NAME: 204403_20EC02.dwg

Plot Date: 5/4/2026 6:40:53 AM

HT PARTERRE LAND LP
PN #0157120101007

10' HIGH PLAINS WATER USERS
ASSOCIATION RIGHT-OF-WAY
BOOK 846 PAGE 214

N. LINE, SE 1/4 SEC. 20

5272 5271 5270 5269 5268 5267 5266 5265 5264 5263 5262 5261 5260 5259 5258 5257 5256 5255 5254 5253 5252 5251 5250 5249 5248 5247 5246 5245

FINAL
SM

TRENCH

60'-0"

QUEBEC ST.
ROAD PETITION #500
COUNTY COMMISSIONER'S
BOOK 1, PAGE 379

STOCKPILES

CITY OF THORNTON
PN #0157120401001

SE 1/4 SEC. 20,
T.1S, R.67W, 6TH P.M.

CUNNINGHAM JULIE
PN #0157120000008

GENERAL NOTES:

1. BASIS OF SURVEY: NAD 1983/2011 AND NAVD88. SEE SURVEY CONTROL DIAGRAM FOR MORE DETAILED DESCRIPTION.

811 Know what's below. Call before you dig.

Call before you Overhead

KEY MAP

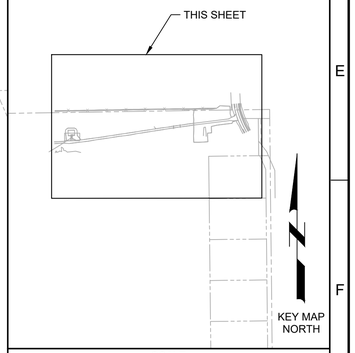

SCALE

0 25' 50' 100'

SCALE: 1" = 50' (HORIZ)

REV	DATE	BY	DESCRIPTION
			BID SET

DESIGNED CDH
DRAWN CDH
CHECKED JJK
DATE MAY 2026

COLORADO LICENSED
COURTNEY D. HUSTED
55165
PROFESSIONAL ENGINEER

carollo

THORNTON WATER PROJECT

CITY OF THORNTON - THORNTON WATER PROJECT

CHEMICAL BUILDING AND PRV VAULTS

CIVIL

SIGNAL HILL INSTRUMENT - EROSION CONTROL PLAN FINAL

VERIFY SCALES
BAR IS ONE INCH ON ORIGINAL DRAWING
0 1"
IF NOT ONE INCH ON THIS SHEET, ADJUST SCALES ACCORDINGLY

JOB NO. 204403
DRAWING NO. 20EC03
SHEET NO. 33 OF 168

LAST SAVED BY: CHusted

PROJECT NO. 200417-100000 FILE NAME: 204403_20EC03.dwg

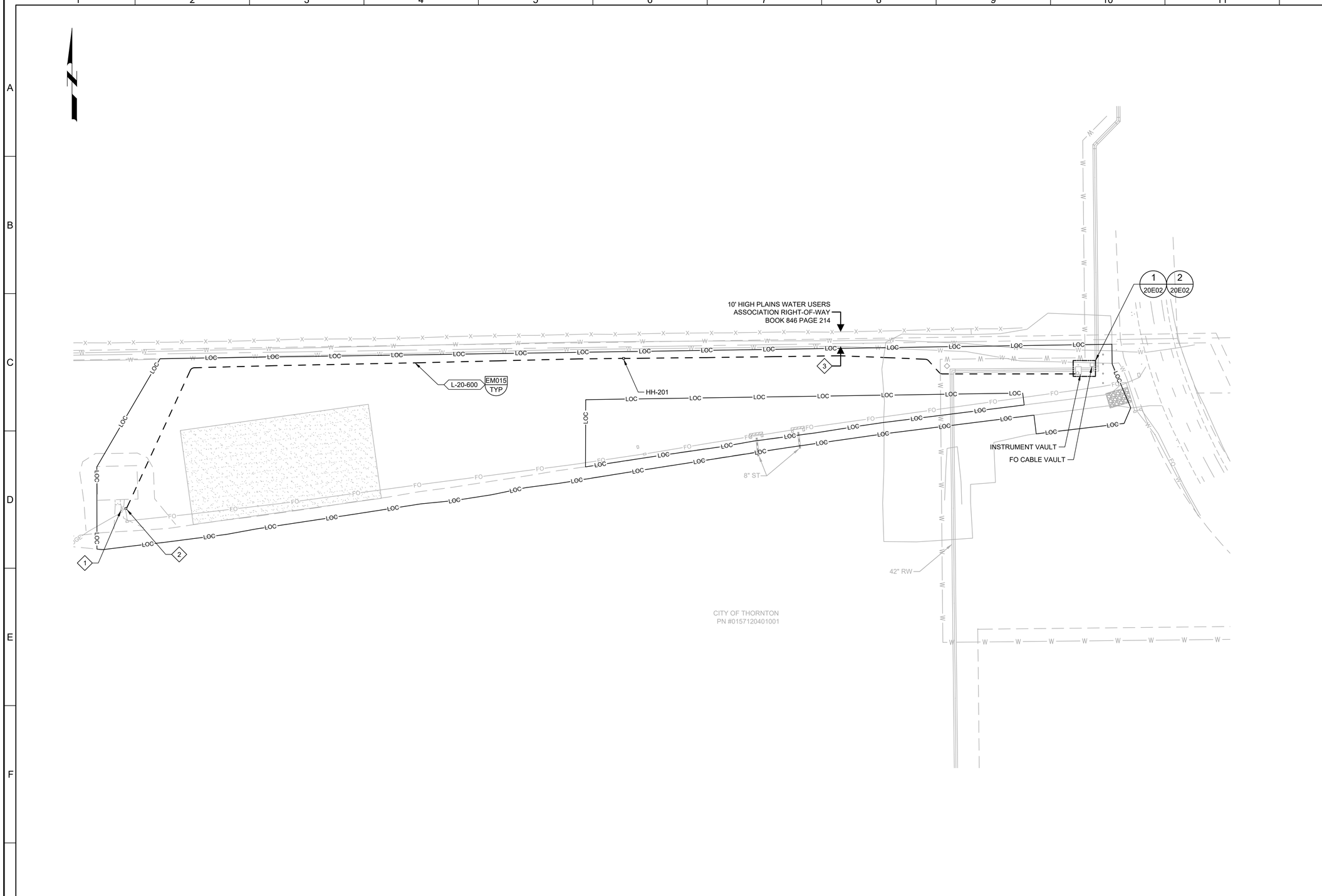

KEY NOTES:

1. EXISTING UNITED POWER TRANSFORMER AT THIS LOCATION.
2. NEW METER PANEL AT THIS LOCATION. CONTRACTOR TO ROUTE CONDUIT AND CONDUCTORS FROM INSTRUMENT VAULT EQUIPMENT STAND TO METER PANEL, AND FROM METER PANEL TO EXISTING TRANSFORMER. UNITED POWER TO TERMINATE CONDUCTORS ON TRANSFORMER SECONDARY.
3. DIRECT-BURY CONDUIT TO MAINTAIN A DISTANCE OF 10' OR MORE AWAY FROM THE HIGH PLAINS EASEMENT.

811
Know what's **below.**
Call before you dig.

KEY MAP

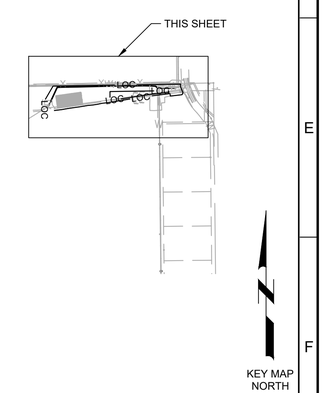

SCALE

0 25' 50' 100'

SCALE: 1" = 50'

REV	DATE	BY	DESCRIPTION
			BID SET

DESIGNED KWG
DRAWN SGH
CHECKED SLB
DATE MAY 2026

COLORADO LICENSED
KELLEN GROSS
55107
PROFESSIONAL ENGINEER

carollo®

THORNTON WATER PROJECT

CITY OF THORNTON - THORNTON WATER PROJECT

CHEMICAL BUILDING AND PRV VAULTS

ELECTRICAL

SIGNAL HILL INSTRUMENT
ELECTRICAL SITE PLAN

VERIFY SCALES
BAR IS ONE INCH ON ORIGINAL DRAWING
0 1"
IF NOT ONE INCH ON THIS SHEET, ADJUST SCALES ACCORDINGLY

JOB NO. 204403
DRAWING NO. 20E01
SHEET NO. 34 OF 168

LAST SAVED BY: GHerrera

PROJECT NO. 204403-100000 FILE NAME: 204403_20E01.dwg

GENERAL NOTES:

1. THIS DRAWING HAS BEEN GENERATED FROM A PDF AND DRAWING SCALE CANNOT BE VERIFIED. FIELD VERIFY CONDITIONS AND DIMENSIONS PRIOR TO WORK.

KEY NOTES:

1. VENTILATION FAN SHALL BE AS MANUFACTURED BY ILG, OR AN APPROVED EQUIVALENT. MODEL PTD DIRECT-DRIVE TUBEAXIAL DUCT FAN SIZE PTD 123 (811 CFM @ 3/8" S.P.) WITH A ONE-SIXTH (1/6) HP, 120V CONSTANT SPEED SINGLE PHASE, 60HZ ELECTRIC MOTOR. CONTROL SWITCH FOR THE FAN SHALL BE MOUNTED NEXT TO THE ENTRYWAY SO THAT IT CAN BE OPERATED WITHOUT COMPLETELY ENTERING THE VAULT. THE DISCHARGE OF THE VENT FAN SHALL BE TOTALLY ENCLOSED AND ATTACHED TO THE OPENING OF THE EXHAUST VENT PIPE.
2. PROVIDE NEMA 4X SST ENCLOSURE FOR PITs. SIZE AS REQUIRED.
3. REFER TO DWG 20E01 FOR DISTANCE BETWEEN FO CABLE VAULT AND INSTRUMENT VAULT.
4. FILLED CAPILLARY PER SPECIFICATION 40_73_63.
5. UL LISTED AS A SERVICE ENTRANCE. BOND NEUTRAL TO EQUIPMENT GROUND BUS. PROVIDE CLASS R FUSES.
6. PROVIDE DIELECTRIC UNION AT PRESSURE INSTRUMENT CONNECTION TO VALVE.

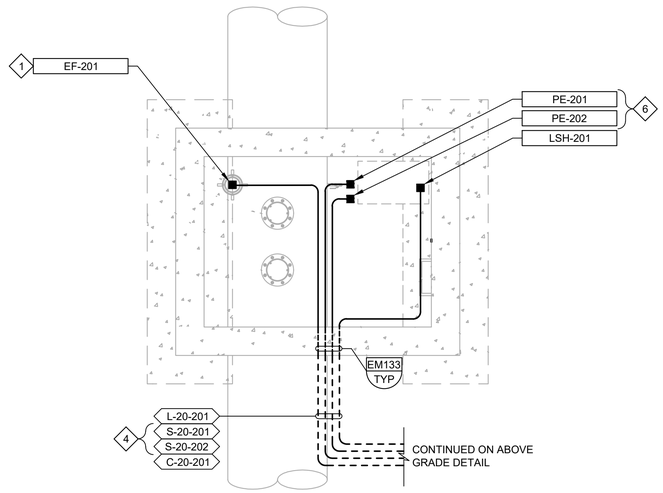

BELOW GRADE

1 / 20E01 DETAIL

SCALE: NO SCALE

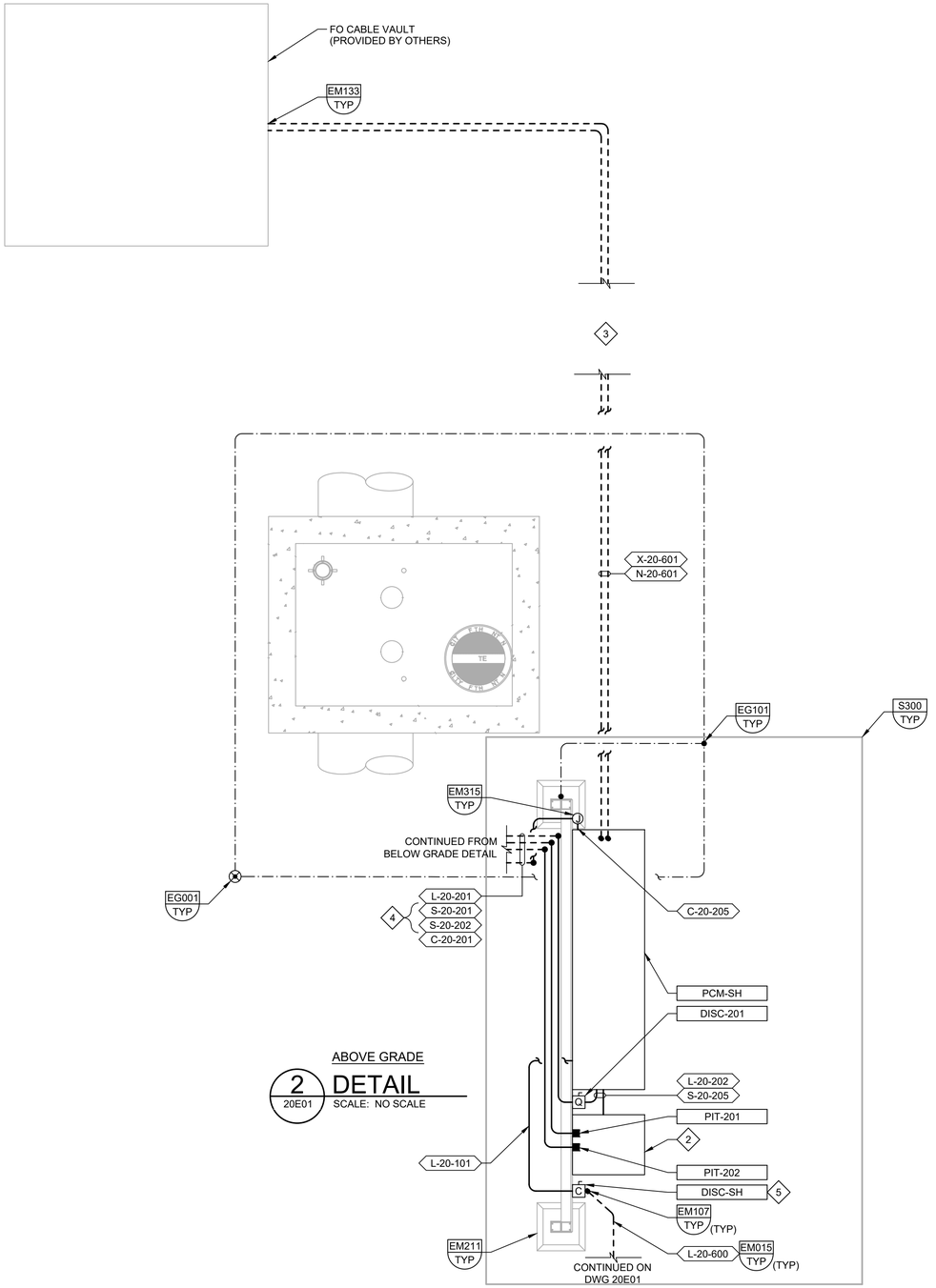

ABOVE GRADE

2 / 20E01 DETAIL

SCALE: NO SCALE

REV	DATE	BY	DESCRIPTION
			BID SET

DESIGNED KWG
DRAWN SGH
CHECKED SLB
DATE MAY 2026

COLORADO LICENSED
KRISTEN GRACE SHEPHERD
55107
PROFESSIONAL ENGINEER
Digitally signed by Kristen M Grace Shepherd
Date: 2026.05.08 16:31:07 -06'00'

carollo

THORNTON WATER PROJECT

CITY OF THORNTON - THORNTON WATER PROJECT

CHEMICAL BUILDING AND PRV VAULTS

ELECTRICAL

SIGNAL HILL INSTRUMENT ELECTRICAL SITE PLAN DETAIL

VERIFY SCALES
BAR IS ONE INCH ON ORIGINAL DRAWING
0 1"
IF NOT ONE INCH ON THIS SHEET, ADJUST SCALES ACCORDINGLY

JOB NO. 204403
DRAWING NO. 20E02
SHEET NO. 35 OF 168

LAST SAVED BY: GHerrera

PROJECT NO. 204403-100000 FILE NAME: 204403_20E02.dwg

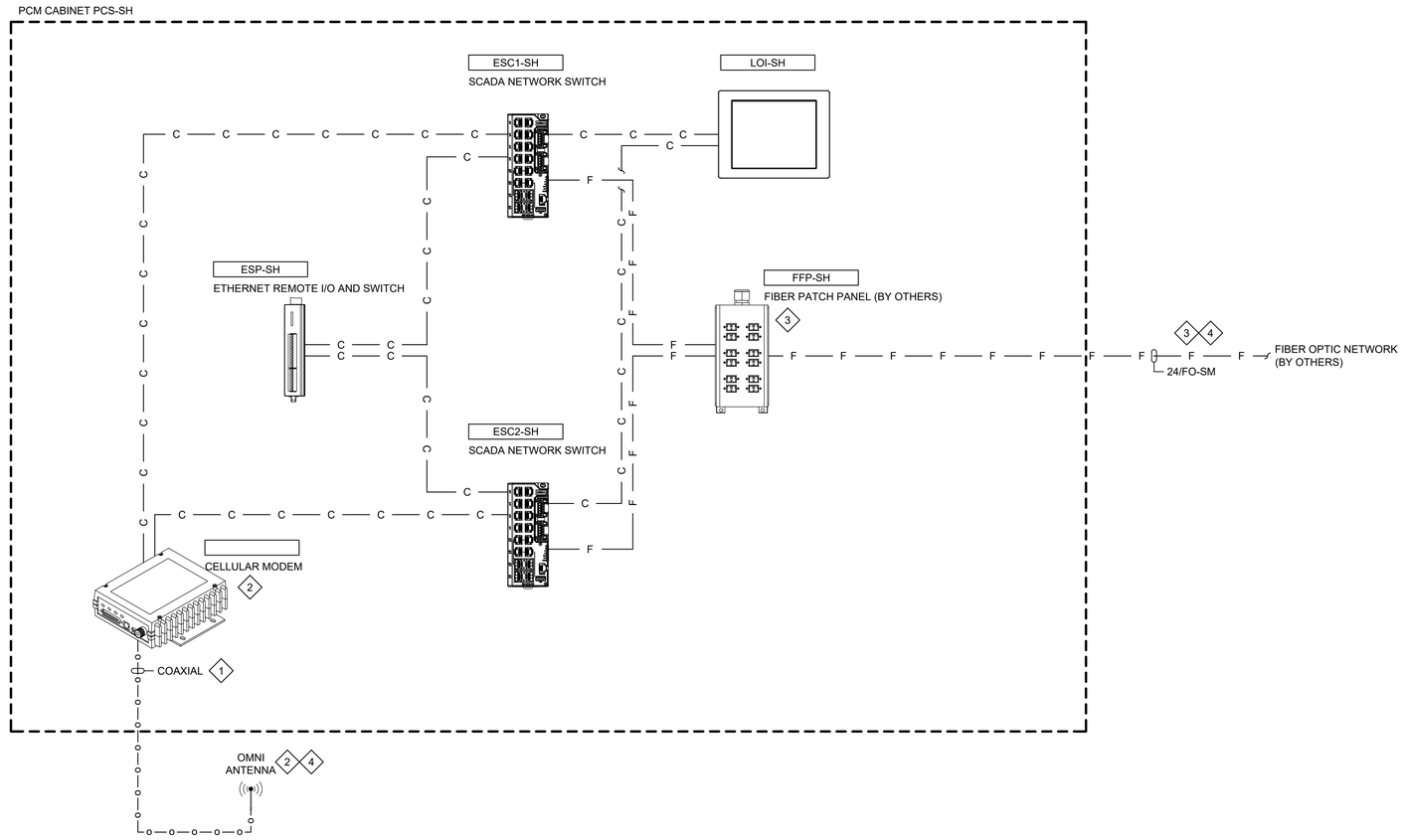

GENERAL NOTES:

1. PROVIDE ADDITIONAL HARDWARE AND CONFIGURATION AS NEEDED FOR A FULLY FUNCTIONAL SYSTEM.

KEY NOTES:

1. PROVIDE SURGE PROTECTION FOR COAXIAL ANTENNA CABLE.
2. CELLULAR MODEM PROVIDED WITH OMNI ANTENNA. REFER TO SPECIFICATIONS FOR ADDITIONAL INFORMATION.
3. FIBER OPTIC NETWORK CABLES, FIBER PATCH PANEL AND TERMINATIONS PROVIDED BY OTHERS. COPPER AND FIBER OPTIC PATCH CABLES AND TERMINATIONS BETWEEN THE FIBER PATCH PANEL AND COMPONENTS INSIDE THE PCM CABINET PROVIDED BY THE CONTRACTOR.
4. PROVIDE AND CONFIGURED BY THE OWNER, INSTALLED BY CONTRACTOR AS PART OF THE SOURCE WATER PUMP STATION AND FIBER OPTIC PROJECTS.

REV	DATE	BY	DESCRIPTION
			BID SET

DESIGNED RDG
DRAWN DKI
CHECKED JM
DATE MAY 2026

COLORADO LICENSED PROFESSIONAL ENGINEER 55107

carollo

THORNTON WATER PROJECT

CITY OF THORNTON - THORNTON WATER PROJECT

CHEMICAL BUILDING AND PRV VAULTS

INSTRUMENTATION

SIGNAL HILL INSTRUMENT - NETWORKS
NETWORK BLOCK DIAGRAM

VERIFY SCALES
BAR IS ONE INCH ON ORIGINAL DRAWING
0 1"
IF NOT ONE INCH ON THIS SHEET, ADJUST SCALES ACCORDINGLY

JOB NO. 204403
DRAWING NO. 20N01
SHEET NO. 36 OF 168

LAST SAVED BY: CRollins

PROJECT NO. 204403-100000 FILE NAME: 204403_20N01.dwg

GENERAL NOTES:

1. REFER TO ELECTRICAL PLANS FOR LOCATION OF ALL ENCLOSURES. CONSTRUCT PANEL TO MEET THE FULL INTENT OF ARTICLE 409 OF THE NATIONAL ELECTRIC CODE.
2. FOLLOW ALL UL 508 AND 508A SUPPLEMENT SB REQUIREMENTS TO DETERMINE SHORT CIRCUIT RATINGS.
3. ALL CONDUIT PENETRATIONS SHALL BE LOCATED AT THE BOTTOM OF THE ENCLOSURE. NO TOP, SIDE, FRONT, OR REAR PENETRATIONS ALLOWED.
4. PROVIDE LABEL INDICATING INTEGRATOR'S LOGO WITH COMPANY NAME AND ADDRESS MOUNTED ON THE FRONT OF THE ENCLOSURE
5. REFERENCE DETAIL NM107/TYP FOR SUNSHIELD INSTALLATION.
6. ALL EXPOSED METALS TO BE PAINTED CITY OF THORNTON STANDARD MOCHA BROWN.
7. ALL EXPOSED PANELS TO BE STAINLESS STEEL 304, STAINLESS STEEL TO BE UNPAINTED.
8. COORDINATE LOCATION OF AIR CONDITIONING UNIT WITH ELECTRICAL INSTALLATION TO ENSURE ADEQUATE CIRCULATION, ACCESS FOR MAINTENANCE AND MOUNTING SPACE FOR PROPER OPERATION.

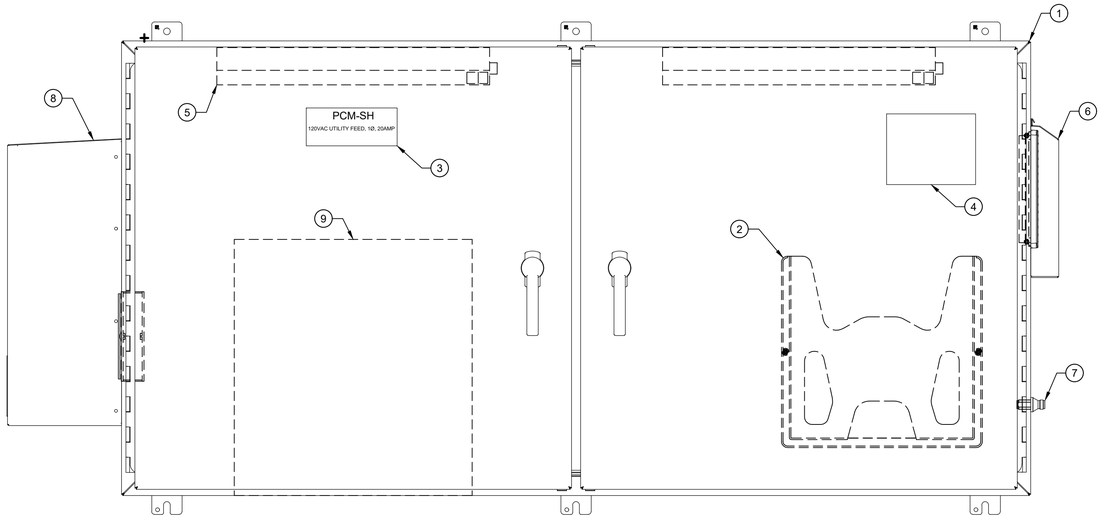

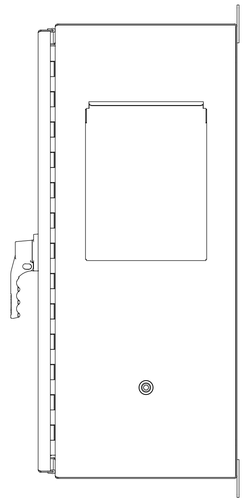

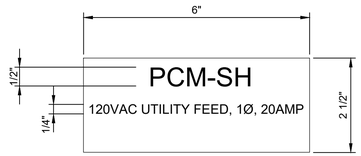

MAJOR EQUIPMENT SCHEDULE

ITEM	DESCRIPTION
1	ENCLOSURE, NEMA 4X (ESTIMATED SIZE, FINAL SIZE BY CONTRACTOR)
2	DATA POCKET
3	NAMEPLATE
4	MANUFACTURER'S LABEL
5	LIGHT W/ INTRUSION SWITCH
6	EXHAUST SHROUD
7	SURGE PROTECTOR (AND CELLULAR OMNI ANTENNA - NOT SHOWN)
8	AIR CONDITIONING UNIT
9	UNINTERRUPTIBLE POWER SUPPLY

REV	DATE	BY	DESCRIPTION
			BID SET

DESIGNED RDG
DRAWN DKI
CHECKED JM
DATE MAY 2026

COLORADO LICENSED
55107
KELLEN GROAT
Digitally signed by Kellen W Groat
Date: 2026.05.08 14:24:17 -06'00'
PROFESSIONAL ENGINEER

carollo

THORNTON WATER PROJECT

CITY OF THORNTON - THORNTON WATER PROJECT

CHEMICAL BUILDING AND PRV VAULTS

INSTRUMENTATION

SIGNAL HILL INSTRUMENT - PANELS PCM PANEL EXTERNAL ELEVATION

VERIFY SCALES
BAR IS ONE INCH ON ORIGINAL DRAWING
0 1"
IF NOT ONE INCH ON THIS SHEET, ADJUST SCALES ACCORDINGLY

JOB NO. 204403
DRAWING NO. 20N02
SHEET NO. 37 OF 168

LAST SAVED BY: DCosme

PROJECT NO. 204403-100000 FILE NAME: 204403_20N02.dwg

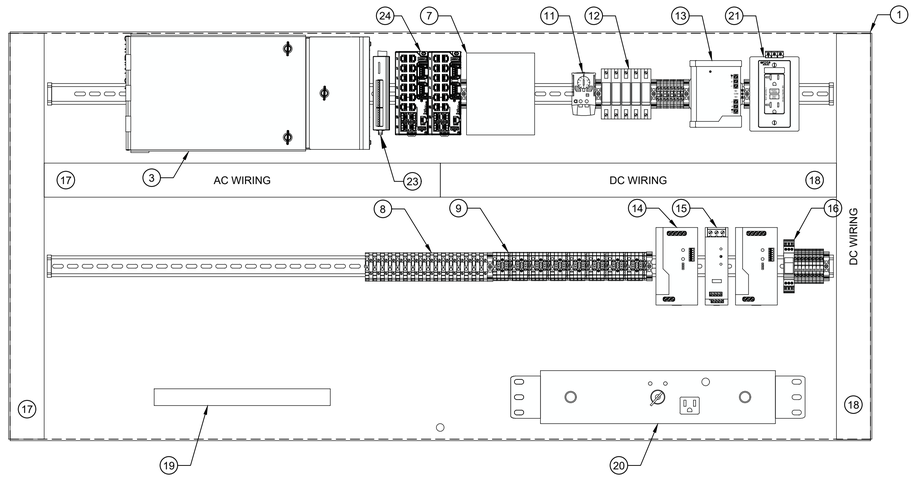

GENERAL NOTES:

1. ENCLOSURE DRAWING REPRESENTS DESIGN INTENT. CONTRACTOR TO SUPPLY AS-BUILT DRAWINGS SHOWING FINAL ENCLOSURE LAYOUT WITH ALL EQUIPMENT, MANUFACTURERS, AND PART NUMBERS.
2. REFER TO ELECTRICAL PLANS FOR LOCATION OF ALL ENCLOSURES. CONSTRUCT PANEL TO MEET THE FULL INTENT OF ARTICLE 409 OF THE NATIONAL ELECTRIC CODE.
3. FOLLOW ALL UL 508 AND 508A SUPPLEMENT SB REQUIREMENTS TO DETERMINE SHORT CIRCUIT RATINGS.
4. CIRCUIT BREAKERS SHALL BE COORDINATED TO TRIP BRANCH CIRCUIT BREAKER PRIOR TO THE MAIN PANEL CIRCUIT BREAKER.
5. ALL TIE WRAPS SHALL BE LOCATED OUTSIDE OF THE WIRE DUCTS. INSTALLATION OF ALL NYLON TIE WRAPS SHALL BE TENSIONED AND TRIMMED FLUSH.
6. ELEVATE ALL TERMINAL BLOCK DIN RAIL A MINIMUM OF 2 INCHES OFF OF BACK PANEL.
7. NO 480VAC CIRCUITS SHALL TERMINATE IN OR PASS THROUGH CONTROL CABINETS.
8. NO CAMERA OR TELEPHONE CABLES SHALL TERMINATE IN OR PASS THROUGH CONTROL CABINETS.
9. ALL CONDUIT PENETRATIONS SHALL BE LOCATED AT THE SIDE OR BOTTOM OF THE ENCLOSURE. NO TOP, FRONT, OR REAR PENETRATIONS ALLOWED.
10. QUANTITY OF COMPONENTS VARY AS REQUIRED FOR EACH CABINET.
11. REFER TO INSTRUMENTATION TYPICAL DETAILS FOR PANEL CONSTRUCTION AND WIRING REQUIREMENTS.
12. PROVIDE PANEL SURGE PROTECTION FOR ALL INSTRUMENT SIGNAL LINES LOCATED OUTDOORS OR OTHERWISE INDICATED IN THE DRAWING OR SPECIFICATIONS.

MAJOR EQUIPMENT SCHEDULE

ITEM	DESCRIPTION
1	BACK PANEL
2	(NOT USED)
3	FIBER PATCH PANEL (BY OTHERS)
4	(NOT USED)
5	(NOT USED)
6	(NOT USED)
7	CELLULAR MODEM WITH FIREWALL SECURITY
8	DISCRETE TERMINAL BLOCKS
9	ANALOG TERMINAL BLOCKS
10	(NOT USED)
11	ENCLOSURE TEMPERATURE SWITCH
12	CIRCUIT BREAKERS
13	120VAC PANEL SURGE PROTECTOR
14	24VDC POWER SUPPLY
15	REDUNDANCY MODULE
16	24VDC PANEL SURGE PROTECTOR
17	GRAY WIRE DUCT
18	WHITE WIRE DUCT
19	GROUND BAR
20	UPS MAINTENANCE BYPASS SWITCH
21	RECEPTACLE, 5A
22	(NOT USED)
23	ETHERNET REMOTE I/O AND SWITCH
24	SCADA NETWORK SWITCH

REV	DATE	BY	DESCRIPTION
			BID SET

DESIGNED RDG
DRAWN DKI
CHECKED JM
DATE MAY 2026

COLORADO LICENSED
55107
KELLEN GROAT
Digitally signed by Kellen W Groat
Date: 2026.05.06 14:24:44 -06'00'
PROFESSIONAL ENGINEER

carollo

THORNTON WATER PROJECT

CITY OF THORNTON - THORNTON WATER PROJECT

CHEMICAL BUILDING AND PRV VAULTS

INSTRUMENTATION

SIGNAL HILL INSTRUMENT - PANELS
PCM PANEL INTERNAL ELEVATION

VERIFY SCALES
BAR IS ONE INCH ON ORIGINAL DRAWING
0 1"
IF NOT ONE INCH ON THIS SHEET, ADJUST SCALES ACCORDINGLY

JOB NO. 204403
DRAWING NO. 20N03
SHEET NO. 38 OF 168

LAST SAVED BY: CRollins

PROJECT NO. 204403-100000 FILE NAME: 204403_20N03.dwg

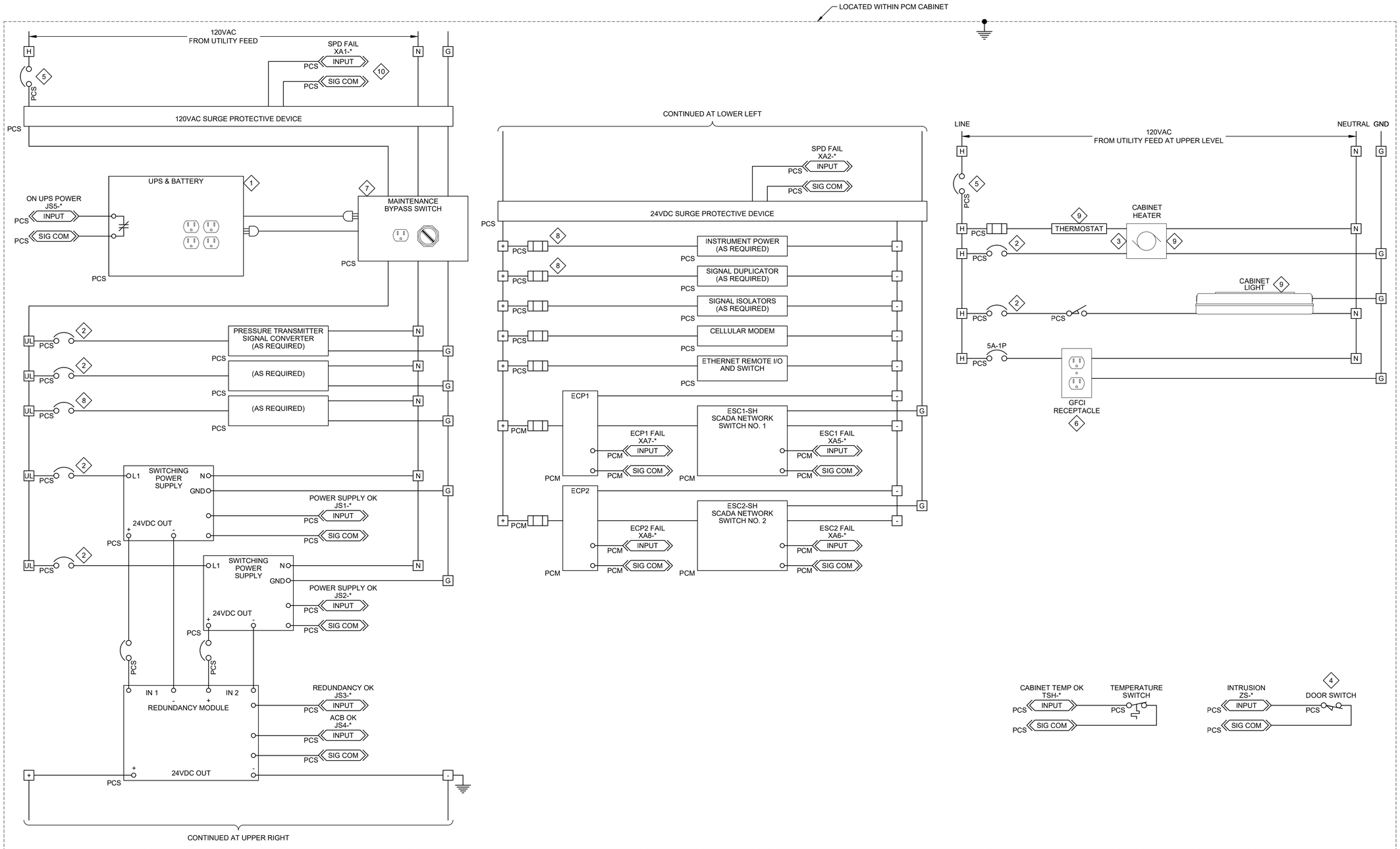

GENERAL NOTES:

1. SCHEMATIC ILLUSTRATES DESIGN INTENT ONLY. PROVIDE ALL NECESSARY COMPONENTS TO MEET PROJECT REQUIREMENTS.

KEY NOTES:

1. SIZE UPS AND BATTERY BASED ON UPS SPECIFICATION REQUIREMENTS.
2. SIZE BASED ON PROTECTION NEEDS.
3. VERIFY LOADS BASED ON TEMPERATURE CALCULATIONS. PROVIDE ADDITIONAL CIRCUIT IF REQUIRED.
4. INSTALL SWITCH ON OUTERMOST DOOR OF OVERLAPPING DOORS. PROVIDE ADDITIONAL SWITCHES, WIRED IN SERIES, FOR NON-OVERLAPPING DOORS.
5. SIZE BASED ON LOAD REQUIREMENT.
6. PROVIDE QUANTITY REQUIRED PER SPECIFICATIONS. SIZE RECEPTACLE FOR LAPTOP.
7. PROVIDE HARDWIRED CONNECTIONS OR RECEPTACLE/PLUG AS REQUIRED BY MAINTENANCE BYPASS SWITCH.
8. SIZE BASED ON PROTECTION NEEDS. PROVIDE SEPARATE CIRCUIT BREAKERS FOR EACH INSTRUMENT POWERED FROM THE PCM CABINET.
9. PROVIDE QUANTITY REQUIRED PER SPECIFICATIONS.
10. E-NET RIO = ETHERNET REMOTE I/O WITH SWITCH MODULE INPUT, TYPICAL.

TERMINAL BLOCK LEGEND

H	120VAC
N	NEUTRAL
G	GROUND
UL	UPS 120VAC
+	24VDC (+)
-	24VDC (-)

TAG ⟷ LOOP
* = SH ⟷ PCM-SH

REFERENCE DWG.
20N06

LOCATION LEGEND

PCM	PCM OR DCS
FLD	FIELD DEVICE

PCM-SH PANEL

1 CONTROL SCHEMATIC

REV	DATE	BY	DESCRIPTION
			BID SET

DESIGNED RDG
DRAWN DKI
CHECKED JM
DATE MAY 2026

COLORADO LICENSED PROFESSIONAL ENGINEER 55107

carollo®

THORNTON WATER PROJECT

CITY OF THORNTON - THORNTON WATER PROJECT
CHEMICAL BUILDING AND PRV VAULTS
INSTRUMENTATION
SIGNAL HILL INSTRUMENT - SCHEMATICS
PCM-SH PANEL POWER WIRING

VERIFY SCALES
BAR IS ONE INCH ON ORIGINAL DRAWING
0 1"
IF NOT ONE INCH ON THIS SHEET, ADJUST SCALES ACCORDINGLY

JOB NO. 204403
DRAWING NO. 20N04
SHEET NO. 39 OF 168

LAST SAVED BY: DCosme

PROJECT NO. 204403-100000 FILE NAME: 204403_20N04.dwg

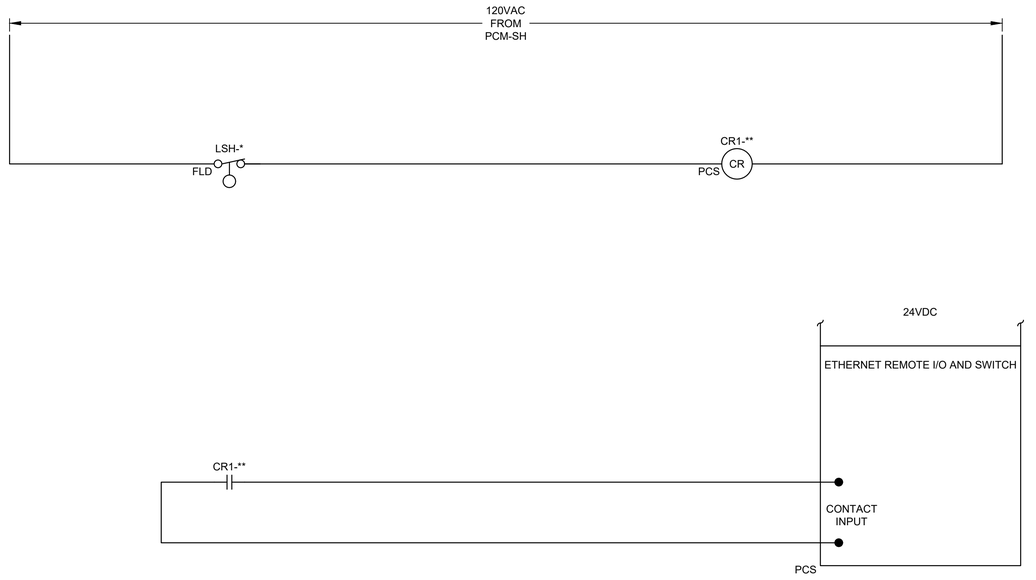

TAG ⟷ LOOP
* = 201, ** = SH ⟷ CS-1

REFERENCE DWG.
20N06

LOCATION LEGEND

PCM	PCS
FLD	FIELD DEVICE

1 CONTROL SCHEMATIC

REV	DATE	BY	DESCRIPTION
			BID SET

DESIGNED RDG
DRAWN LR
CHECKED JM
DATE MAY 2026

COLORADO LICENSED
KELLEN GROSS
55107
Digitally signed by Kellen W Gross
Distinguished Name: Carollo Engineers
Date: 2026.06.09 14:24:23 -06'00'
PROFESSIONAL ENGINEER

carollo®

THORNTON WATER PROJECT

CITY OF THORNTON - THORNTON WATER PROJECT

CHEMICAL BUILDING AND PRV VAULTS

INSTRUMENTATION

SIGNAL HILL INSTRUMENT - LEVEL SWITCH AND CONTROL RELAY WIRING DIAGRAM

VERIFY SCALES
BAR IS ONE INCH ON ORIGINAL DRAWING
0 1"
IF NOT ONE INCH ON THIS SHEET, ADJUST SCALES ACCORDINGLY

JOB NO. 204403
DRAWING NO. 20N05
SHEET NO. 40 OF 168

LAST SAVED BY: DCosme

PROJECT NO. 204403-100000 FILE NAME: 204403_20N05.dwg

KEY NOTES:

1. E-NET RIO = ETHERNET REMOTE I/O WITH SWITCH MODULE INPUT, TYPICAL.
2. DIAPHRAGM SEALS WITH FILLED CAPILLARIES CONNECTED TO PIT INSTALLED ABOVE GRADE IN A NEMA 4X, PADLOCKABLE ENCLOSURE.
3. UPMP - UNITED POWER METER PANEL.
4. PROVIDE LOOP DIAGRAMS FOR PRESSURE INDICATING TRANSMITTER INPUTS. WIRE 4 TO 10mA DC SIGNAL IN SERIES TO THE CELLULAR MODEM AND ETHERNET REMOTE I/O AND SWITCH INPUTS.

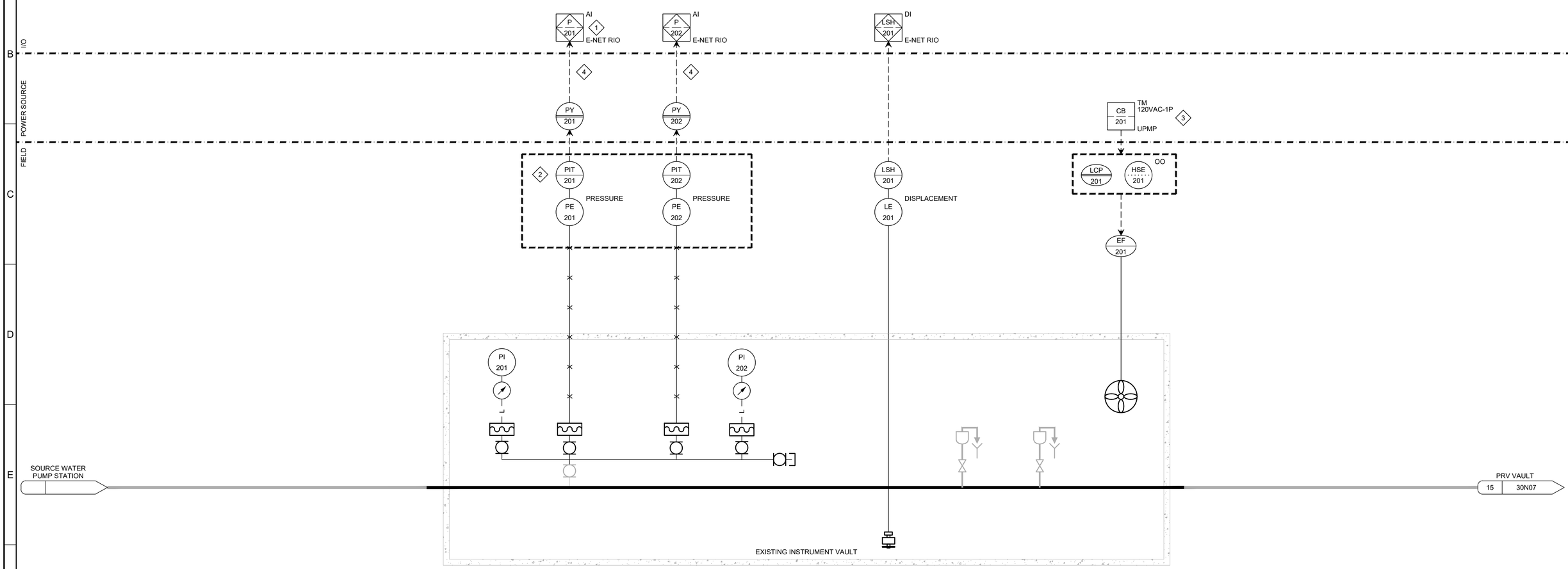

REV	DATE	BY	DESCRIPTION
			BID SET

DESIGNED RDG
DRAWN DKI
CHECKED JM
DATE MAY 2026

COLORADO LICENSED PROFESSIONAL ENGINEER 55107 KELLEN GROSS

carollo

THORNTON WATER PROJECT

CITY OF THORNTON - THORNTON WATER PROJECT

CHEMICAL BUILDING AND PRV VAULTS

INSTRUMENTATION

SIGNAL HILL INSTRUMENT - P&ID
INSTRUMENT VAULT

VERIFY SCALES
BAR IS ONE INCH ON ORIGINAL DRAWING
0 1"
IF NOT ONE INCH ON THIS SHEET, ADJUST SCALES ACCORDINGLY

JOB NO. 204403
DRAWING NO. 20N06
SHEET NO. 41 OF 168

LAST SAVED BY: DCosme

PROJECT NO. 204403-100000 FILE NAME: 204403_20N06.dwg

KEY NOTES:

1. UPMP - UNITED POWER METER PANEL.
2. E-NET RIO = ETHERNET REMOTE I/O WITH SWITCH MODULE INPUT, TYPICAL.

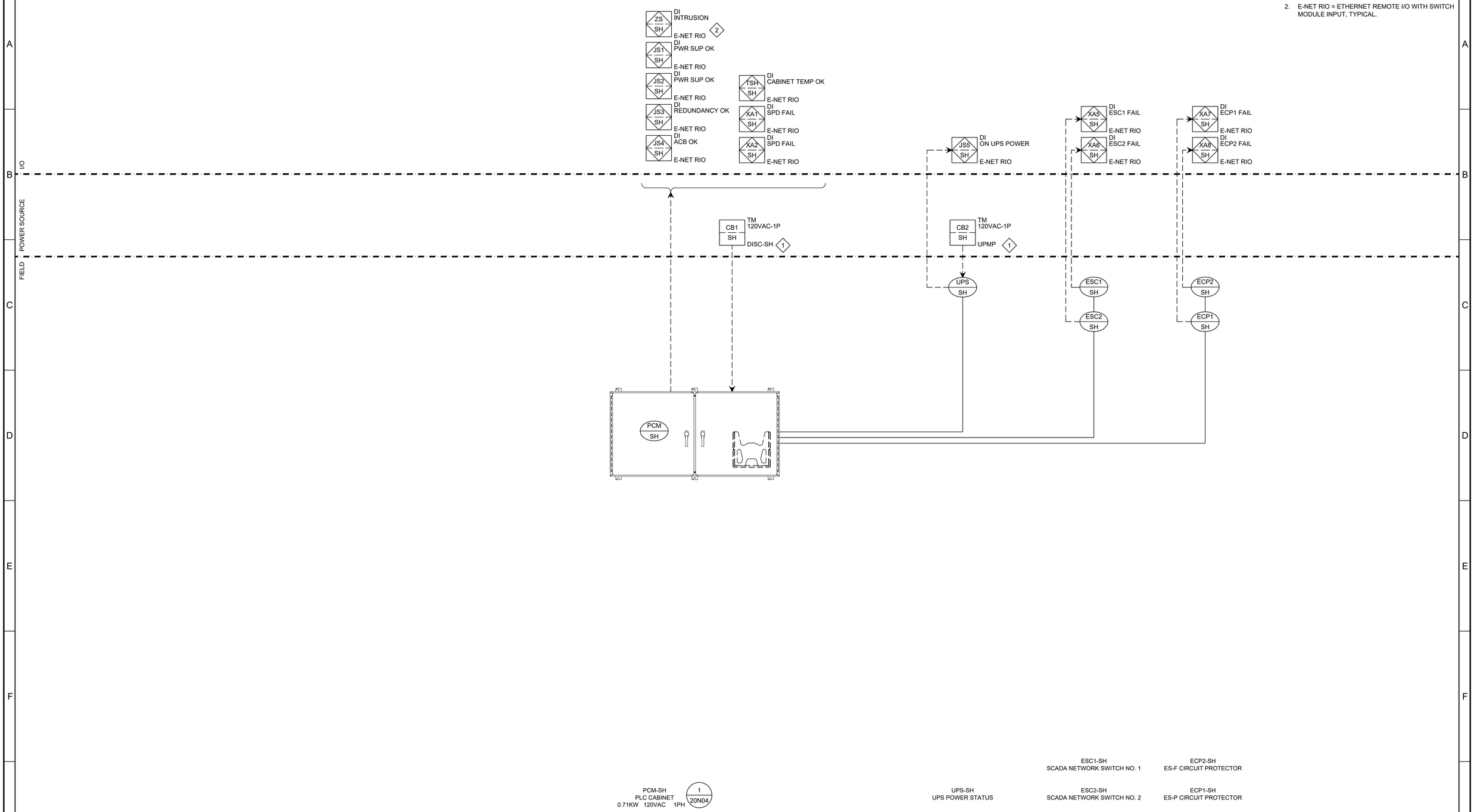

REV	DATE	BY	DESCRIPTION
			BID SET

DESIGNED RDG
DRAWN DKI
CHECKED JM
DATE MAY 2026

COLORADO LICENSED PROFESSIONAL ENGINEER KELLEN GROSS 55107 Digitally signed by Kellen W Gross Contact Info: Carollo Engineers, Inc. 2026.05.08 14:23:47 -06'00'

carollo

THORNTON WATER PROJECT

CITY OF THORNTON - THORNTON WATER PROJECT

CHEMICAL BUILDING AND PRV VAULTS

INSTRUMENTATION

SIGNAL HILL INSTRUMENT - P&ID
PCM-SH CABINET

VERIFY SCALES
BAR IS ONE INCH ON ORIGINAL DRAWING
0 1"
IF NOT ONE INCH ON THIS SHEET, ADJUST SCALES ACCORDINGLY

JOB NO. 204403
DRAWING NO. 20N07
SHEET NO. 42 OF 168

LAST SAVED BY: CRollins

PROJECT NO. 204403-100000 FILE NAME: 204403_20N07.dwg

KEY NOTES:

1. ESTIMATED SIZE, FINAL SIZE BY CONTRACTOR.

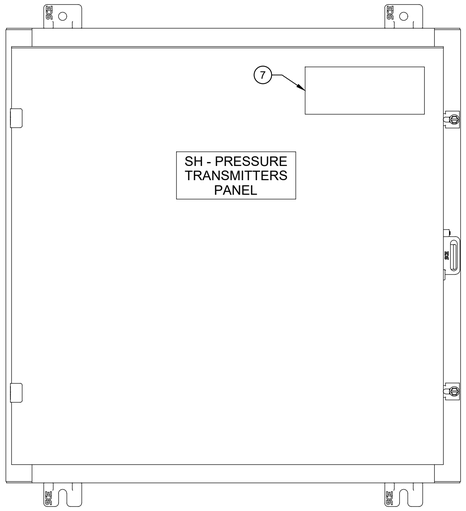

EXTERIOR

FRONT VIEW

SCALE: 3" = 1' - 0"

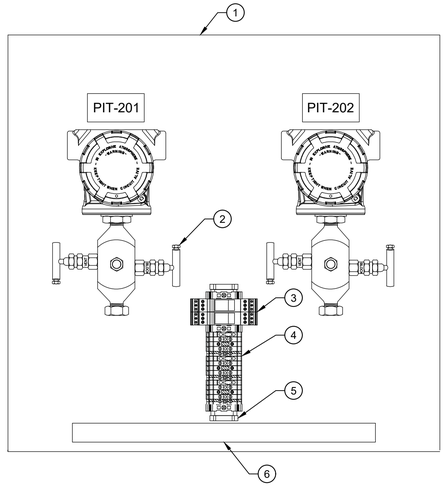

INTERIOR

FRONT VIEW

SCALE: 3" = 1' - 0"

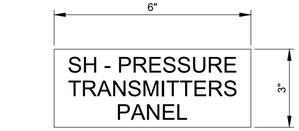

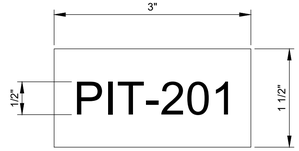

NAMEPLATE SCHEDULE
PIT-201
PIT-202

MAJOR EQUIPMENT SCHEDULE	
ITEM	DESCRIPTION
1	NEMA 4X SST, PADLOCKABLE ENCLOSURE AND BACK PANEL
2	PRESSURE INDICATING TRANSMITTER; TYP.
3	24VDC SURGE PROTECTOR (QUANTITY AS REQUIRED)
4	ANALOG TERMINAL BLOCKS (QUANTITY AS REQUIRED)
5	DIN RAIL (QUANTITY AS REQUIRED)
6	GROUND BAR
7	MANUFACTURER'S LABEL

REV	DATE	BY	DESCRIPTION
			BID SET

DESIGNED RG
DRAWN DBC
CHECKED JM
DATE MAY 2026

COLORADO LICENSED
KRISTEN GROAT
55107
PROFESSIONAL ENGINEER

CITY OF THORNTON - THORNTON WATER PROJECT

CHEMICAL BUILDING AND PRV VAULTS

INSTRUMENTATION

SIGNAL HILL INSTRUMENT - PRESSURE TRANSMITTERS PANEL ELEVATIONS

VERIFY SCALES
BAR IS ONE INCH ON ORIGINAL DRAWING
0 1"
IF NOT ONE INCH ON THIS SHEET, ADJUST SCALES ACCORDINGLY

JOB NO. 204403
DRAWING NO. 20N08
SHEET NO. 43 OF 168

LAST SAVED BY: DCosme

PROJECT NO. 204403-100000 FILE NAME: 204403_20N08.dwg

Plot Date: 5/4/2026 6:41:33 AM

E 100TH AVE
PUBLIC RIGHT-OF-WAY
WIDTH VARIES

40' ROW
40' ROW
30' ROW
40' ROW

CENTURYLINK (LUMEN) 100 PAIR PHONE
12" RCP INV= 5065.01
12" RCP INV= 5064.69
COMM FLAGS BY OTHERS FROM 811 RESPONSE – NO UTILITY RECORDS FOUND
8" NON-POTABLE IRRIGATION LINE
4" PE XCEL ENERGY GAS
THORNTON FIBER
42" POTABLE WATER
36" NON-POTABLE WATER
8" POTABLE WATER
STORM MANHOLE
RIM=5069.02
48" CMP INV =5062.7
36" RAW WATERLINE
12" CMP INV= 5064.18
EX-36" NPW
EX-54" SD
EX-8" PW
EX-36" LCC RW
EX-12" DR
STORM MANHOLE
RIM=5069.28
36" RCP INV =5061.6
UNDERDRAIN MANHOLE
RIM=5069.32
12" PVC INV OUT (E)=5059.62
12" PVC INV OUT (S)=5059.82
UNDERDRAIN MANHOLE
RIM=5068.60
12" PVC INV IN (W)=5056.80
12" PVC INV OUT (S)=5056.60
EX. SOIL-BENTONITE SLURRY WALL
42" TWP SEG A
CITY OF THORNTON
PN #0172117002001

GENERAL NOTES:

1. BASIS OF SURVEY: NAD 1983/2011 AND NAVD88. SEE SURVEY CONTROL DIAGRAM FOR MORE DETAILED DESCRIPTION.

KEY NOTES:

1. CLEAR AND GRUB EXISTING VEGETATION TO LIMITS SHOWN.
2. REMOVE AND REINSTALL FENCE.
3. REMOVE AND REINSTALL SIGNS AT LOCATION DEPICTED ON DRAWING 30C02.
4. SAWCUT EXISTING ASPHALT.
5. REMOVE EXISTING ACCESS ROAD.
6. PROTECT FENCE AND GATE IN PLACE.

811 Know what's below. Call before you dig.

Call before you Overhead

KEY MAP

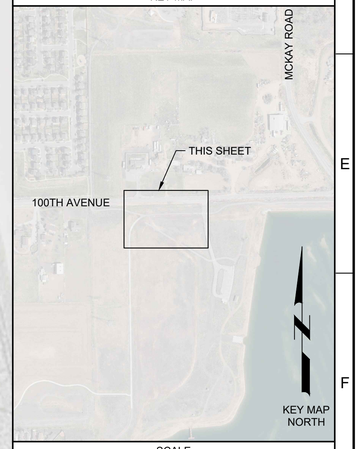

SCALE

0 10' 20' 40'
SCALE: 1" = 20' (HORIZ)

REV	DATE	BY	DESCRIPTION
			BID SET

DESIGNED CDH
DRAWN CDH
CHECKED JJK
DATE MAY 2026

COLORADO LICENSED
COURTNEY D. HUNTER
55165
Digitally signed by D. Courtney Hunter
Date: 2026.05.04 13:33:06-06'00'
PROFESSIONAL ENGINEER

carollo

THORNTON WATER PROJECT

CITY OF THORNTON - THORNTON WATER PROJECT
CHEMICAL BUILDING AND PRV VAULTS
CIVIL
LCC PRV - CIVIL SITE AND YARD PIPING DEMOLITION PLAN

VERIFY SCALES
BAR IS ONE INCH ON ORIGINAL DRAWING
0 1"
IF NOT ONE INCH ON THIS SHEET, ADJUST SCALES ACCORDINGLY

JOB NO. 204403
DRAWING NO. 30C01
SHEET NO. 44 OF 168

LAST SAVED BY: CHusted

PROJECT NO. 200417-100000 FILE NAME: 204403_30C01.dwg

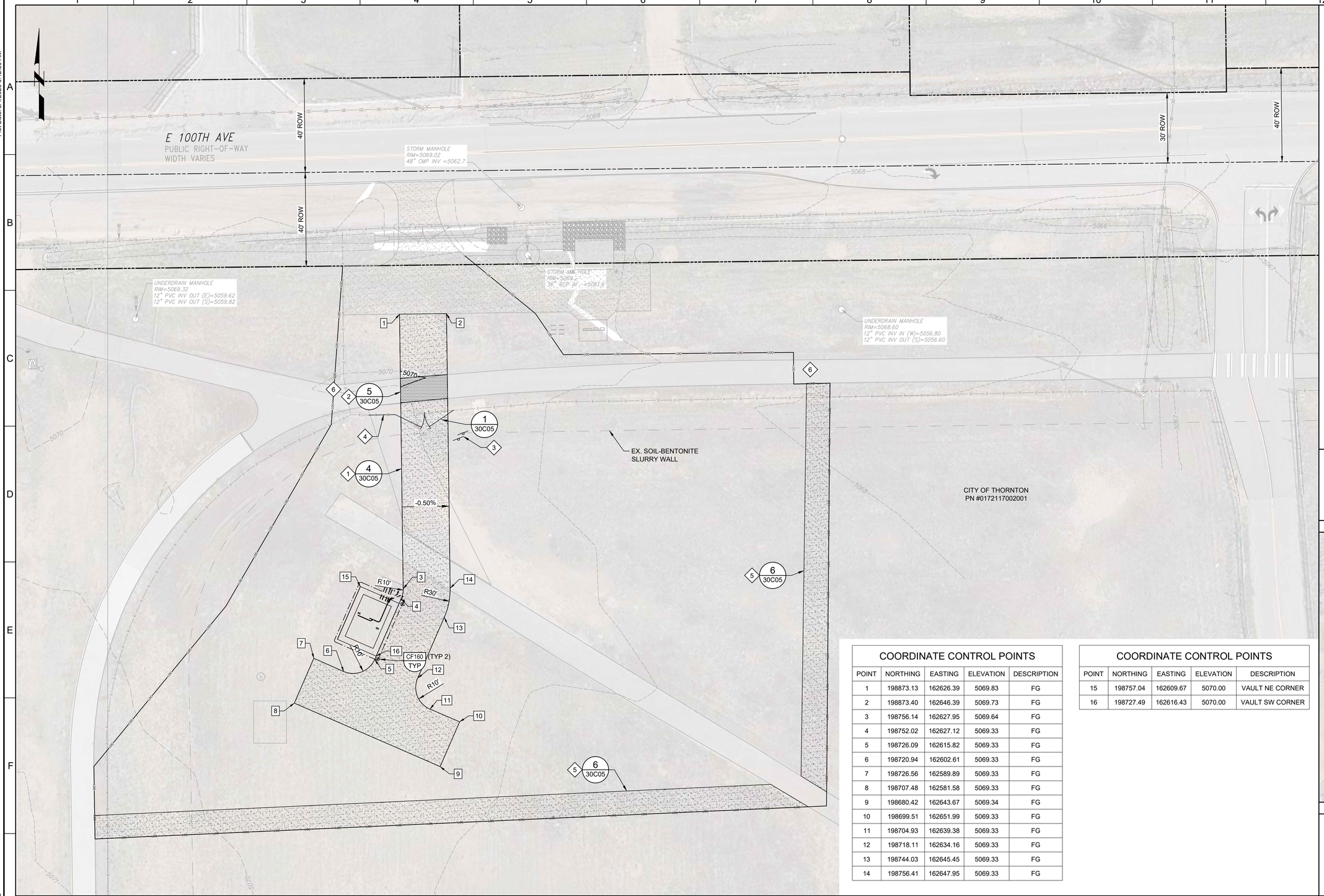

GENERAL NOTES:

1. BASIS OF SURVEY: NAD 1983/2011 AND NAVD88. SEE SURVEY CONTROL DIAGRAM FOR MORE DETAILED DESCRIPTION.
2. SEE ELECTRICAL PLANS FOR ELECTRICAL EQUIPMENT DETAILS.

KEY NOTES:

1. PERMANENT RECYCLED ASPHALT ACCESS ROAD.
2. REPAIR ASPHALT PATH TO MATCH EXISTING CONDITIONS.
3. REINSTALL SIGNS.
4. EXTEND FENCE TO EDGE OF ROADWAY.
5. INSTALL TEMPORARY REGIONAL TRAIL REROUTE WITH DETOUR SIGNAGE, TEMPORARY FENCING, AND OTHER ITEMS AS REQUIRED BY CITY OF THORNTON PARKS DEPARTMENT. PROVIDE REROUTING PLAN TO CITY FOR APPROVAL.
6. INSTALL TRAIL CLOSED SIGN.

Know what's below. Call before you dig.

Call before you Overhead

KEY MAP

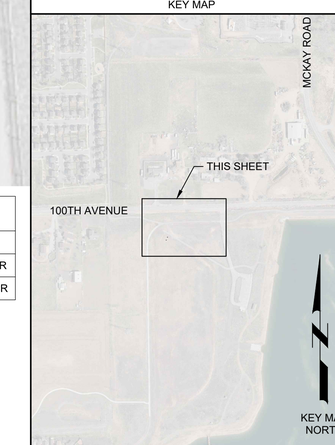

SCALE

0 10' 20' 40'

SCALE: 1" = 20' (HORIZ)

COORDINATE CONTROL POINTS

POINT	NORTHING	EASTING	ELEVATION	DESCRIPTION
1	198873.13	162626.39	5069.83	FG
2	198873.40	162646.39	5069.73	FG
3	198756.14	162627.95	5069.64	FG
4	198752.02	162627.12	5069.33	FG
5	198726.09	162615.82	5069.33	FG
6	198720.94	162602.61	5069.33	FG
7	198726.56	162589.89	5069.33	FG
8	198707.48	162581.58	5069.33	FG
9	198680.42	162643.67	5069.34	FG
10	198699.51	162651.99	5069.33	FG
11	198704.93	162639.38	5069.33	FG
12	198718.11	162634.16	5069.33	FG
13	198744.03	162645.45	5069.33	FG
14	198756.41	162647.95	5069.33	FG

COORDINATE CONTROL POINTS

POINT	NORTHING	EASTING	ELEVATION	DESCRIPTION
15	198757.04	162609.67	5070.00	VAULT NE CORNER
16	198727.49	162616.43	5070.00	VAULT SW CORNER

REV	DATE	BY	DESCRIPTION
			BID SET

DESIGNED RJF
DRAWN RJF
CHECKED JJK
DATE MAY 2026

COLORADO LICENSED PROFESSIONAL ENGINEER 55165 Digitally signed by Courtney D. Husted Date: 2026.04.15 13:33:28-06'00'

carollo

THORNTON WATER PROJECT

CITY OF THORNTON - THORNTON WATER PROJECT

CHEMICAL BUILDING AND PRV VAULTS

CIVIL

LCC PRV -
GRADING, PAVING, AND DRAINAGE PLAN

VERIFY SCALES
BAR IS ONE INCH ON ORIGINAL DRAWING
0 1"
IF NOT ONE INCH ON THIS SHEET, ADJUST SCALES ACCORDINGLY

JOB NO. 204403
DRAWING NO. 30C02
SHEET NO. 45 OF 168

Plot Date: 5/4/2026 6:42:30 AM

LAST SAVED BY: CHusted

PROJECT NO. 200417-100000 FILE NAME: 204403_30C02.dwg

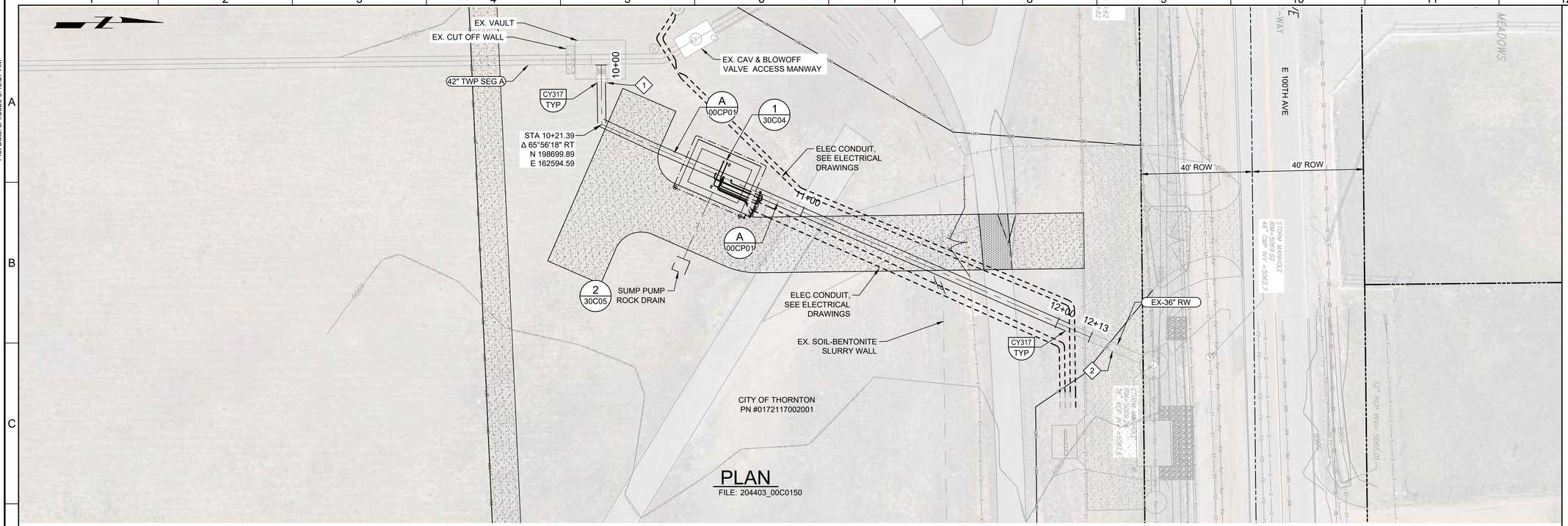

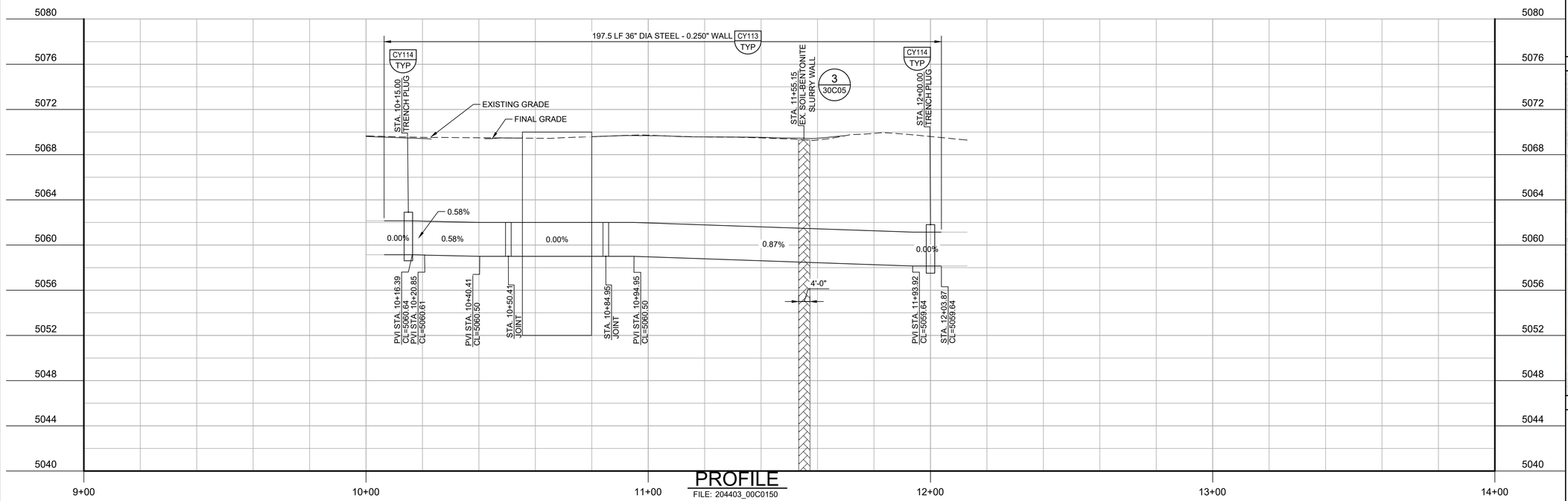

GENERAL NOTES:

1. BASIS OF SURVEY: NAD 1983/2011 AND NAVD88. SEE SURVEY CONTROL DIAGRAM FOR MORE DETAILED DESCRIPTION.
2. SEE ELECTRICAL PLANS FOR ELECTRICAL EQUIPMENT AND CONDUIT DETAILS.

KEY NOTES:

1. VERIFY EXISTING FLANGE ISOLATION KITS AND CP TEST STATION COMPONENTS ARE PRESENT AND FUNCTIONING CORRECTLY ON EXISTING 36" VAULT AND STUB-OUT. NOTIFY OWNER OF ANY DAMAGED COMPONENTS PER TWP WORK PACKAGE A DRAWINGS.
2. PROTECT EXISTING CP TEST STATION AND ANODES. REPLACE ANY DAMAGED COMPONENTS PER DETAIL A, SHEET 00CP01.

811 Know what's below. Call before you dig.

Call before you Overhead

KEY MAP

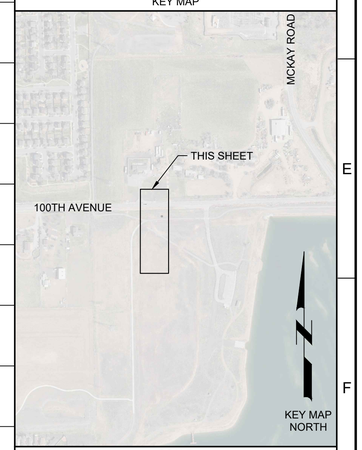

SCALE

0 10' 20' 40'
SCALE: 1" = 20' (HORIZ)

0 2.5' 5' 10'
SCALE: 1" = 5' (VERT)

REV	DATE	BY	DESCRIPTION
			BID SET

DESIGNED CDH
DRAWN CDH
CHECKED JJK
DATE MAY 2026

COLORADO LICENSED COURTNEY D. HARRIS 55165 Digitally signed by Courtney D. Harris Date: 2026.05.04 16:33:44-06'00' PROFESSIONAL ENGINEER

carollo

THORNTON WATER PROJECT

CITY OF THORNTON - THORNTON WATER PROJECT

CHEMICAL BUILDING AND PRV VAULTS

CIVIL

LCC PRV - YARD PIPING PLAN AND PROFILE

VERIFY SCALES
BAR IS ONE INCH ON ORIGINAL DRAWING
0 1"
IF NOT ONE INCH ON THIS SHEET, ADJUST SCALES ACCORDINGLY

JOB NO. 204403
DRAWING NO. 30C03
SHEET NO. 46 OF 168

LAST SAVED BY: CHusted

PROJECT NO. 200417-100000 FILE NAME: 204403_30C03.dwg

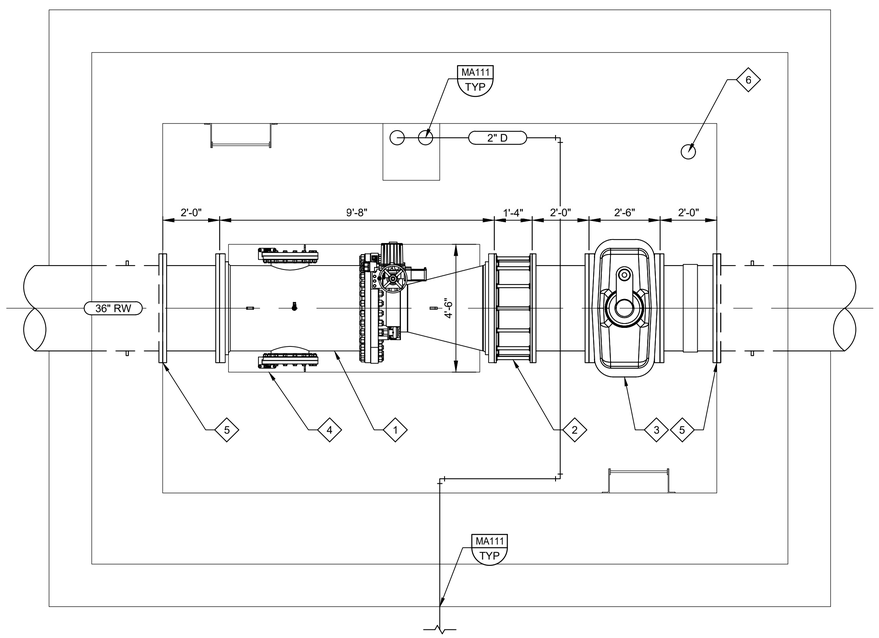

PLAN

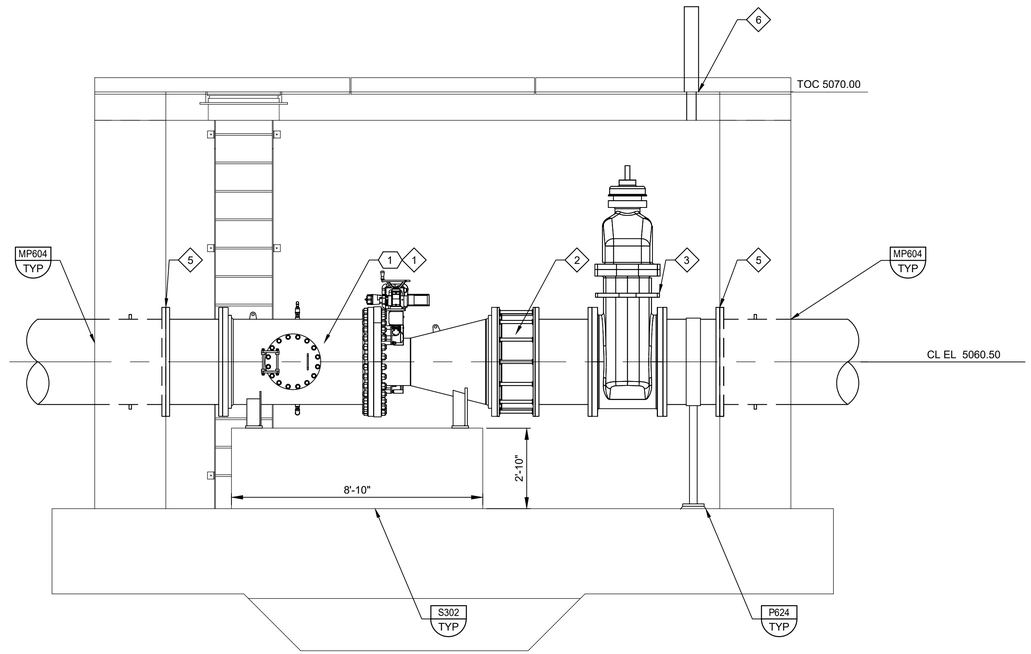

SECTION

PRV VAULT

1 30C03 **DETAIL**

0 2' 4' 6'

SCALE: 3/8" = 1'-0"

GENERAL NOTES:

1. ALL PIPING FLANGES SHALL BE AWWA C207 CLASS D, UNLESS OTHERWISE INDICATED.
2. PIPE WALL THICKNESS OF PIPING WITHIN VAULT SHALL MATCH THAT OF ADJACENT BURIED PIPING.
3. FIELD ROUTE AND PROVIDE PIPE SUPPORTS AT A MAXIMUM SPACING OF 3-FEET FOR ALL DRAIN PIPING.

X KEY NOTES:

1. 36" SLEEVE VALVE W/ 18" MODULATING SLEEVE AND 18" STATIC SLEEVE.
2. 42 INCH DMJ, LAY LENGTH BASED ON ROMAC DJ400. CONTRACTOR TO TO MODIFY PIPE SPOOL LENGTH TO ACCOMMODATE OTHER SPECIFIED MANUFACTURERS.
3. 36" NRS GATE VALVE WITH SPUR GEAR.
4. SLEEVE VALVE CONCRETE SUPPORT.
5. FLANGE ISOLATION KIT PER DETAIL B, SHEET 00CO02.
6. AIR VENT PER CITY OF THORNTON TYPICAL DETAIL 200-20, SEE ELECTRICAL DRAWINGS FOR FAN INSTALLATION.

KEY TAGS:

1 VAL-300

811 Know what's below. Call before you dig. usanorth811.org

REV	DATE	BY	DESCRIPTION
			BID SET

DESIGNED MEP
DRAWN MEP
CHECKED BLG
DATE MAY 2026

COLORADO LICENSED PROFESSIONAL ENGINEER 43662 Digitally signed by Bart L. Gates Reason: I am the author of this document Date: 2026.05.06 15:27:36 -06'00'

carollo

THORNTON WATER PROJECT

CITY OF THORNTON - THORNTON WATER PROJECT

CHEMICAL BUILDING AND PRV VAULTS

CIVIL

PRV VAULT DETAILS

VERIFY SCALES
BAR IS ONE INCH ON ORIGINAL DRAWING
0 1"
IF NOT ONE INCH ON THIS SHEET, ADJUST SCALES ACCORDINGLY

JOB NO. 204403
DRAWING NO. 30C04
SHEET NO. 47 OF 168

LAST SAVED BY: AEvans

PROJECT NO. 204403-100000 FILE NAME: 204403_30C04.dwg

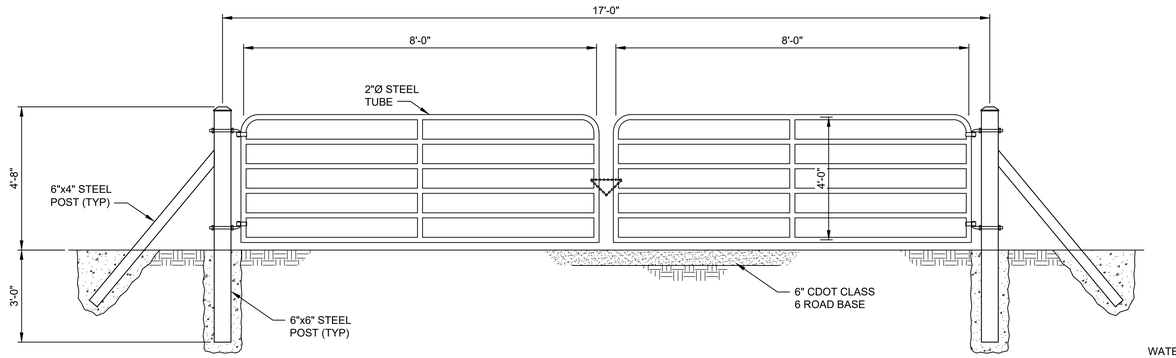

NOTES:

1. DETAILED GATE DESIGN SHALL BE PROVIDED BY GATE MANUFACTURER.
2. FURNISH GATE CHAIN FOR LOCKING GATE, MINIMUM GAUGE 10 MM. OWNER TO PROVIDE PADLOCK.
3. PAINT GATE IN ACCORDANCE WITH MANUFACTURE RECOMMENDATIONS. COORDINATE WITH CONSTRUCTION MANAGER REGARDING ANY SPECIAL COLOR REQUIREMENTS FROM PROPERTY OWNER.
4. CONTRACTOR TO TIE INTO EXISTING WIRE FENCE.
5. DUAL SWING GATE TO BE RANCH DITY PRIEFERT 2" BULL GATE OR APPROVED EQUAL.

1 DUAL SWING STEEL GATE

SCALE: NTS
FILE: 204403_00C0136

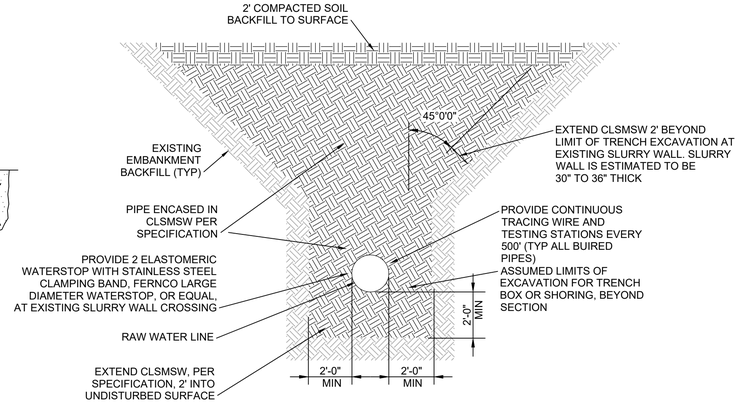

3 SHALLOW SLURRY WALL CROSSING

30C02
SCALE: NTS
FILE: 204403_00C0136

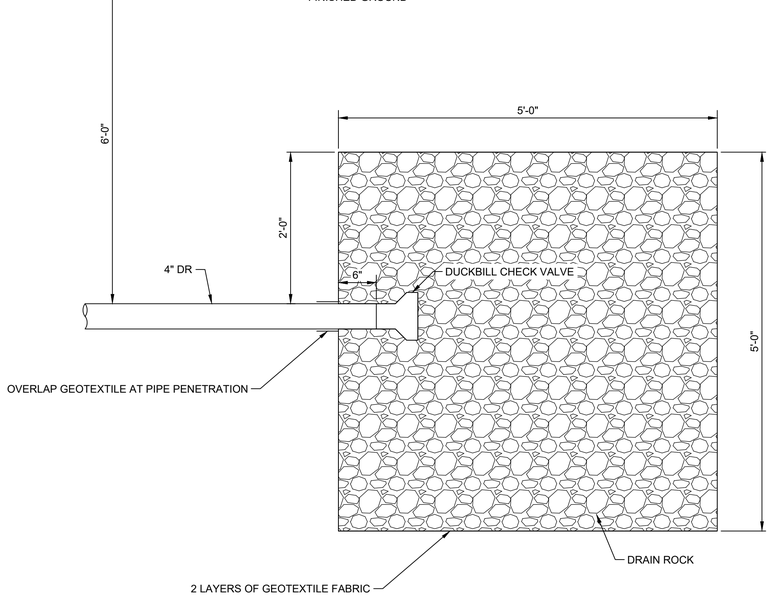

2 SUMP PUMP ROCK DRAIN

SCALE: NTS
FILE: 204403_00C0136

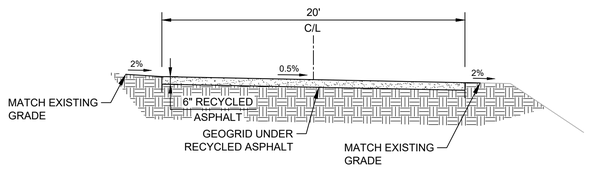

4 20' RECYCLED ASPHALT ROAD

SCALE: 1" = 5'
FILE: 204403_00C0136

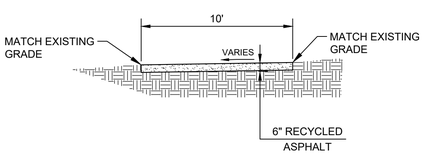

6 10' TEMPORARY RECYCLED ASPHALT TRAIL

SCALE: 1" = 5'
FILE: 204403_00C0136

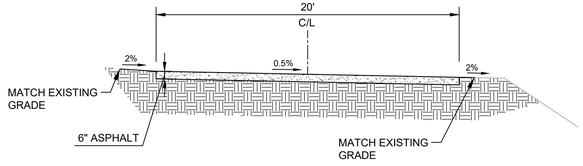

5 20' ASPHALT ROAD

SCALE: 1" = 5'
FILE: 204403_00C0136

REV	DATE	BY	DESCRIPTION
			BID SET

DESIGNED CDH
DRAWN CDH
CHECKED JJK
DATE MAY 2026

COLORADO LICENSED COURTNEY D. HUNTER 55165 PROFESSIONAL ENGINEER

CITY OF THORNTON - THORNTON WATER PROJECT
CHEMICAL BUILDING AND PRV VAULTS
CIVIL
LCC PRV - CIVIL DETAILS

VERIFY SCALES
BAR IS ONE INCH ON ORIGINAL DRAWING
0 1"
IF NOT ONE INCH ON THIS SHEET, ADJUST SCALES ACCORDINGLY

JOB NO. 204403
DRAWING NO. 30C05
SHEET NO. 48 OF 168

LAST SAVED BY: Chusted

PROJECT NO. 200417-100000 FILE NAME: 204403_30C05.dwg

Plot Date: 5/4/2026 6:45:02 AM

CITY OF THORNTON EROSION AND SEDIMENT CONTROL NOTES:

1. CONTROL MEASURES SHALL BE INSTALLED BEFORE ANY EARTH DISTURBING ACTIVITIES COMMENCE.
2. THE OWNER/CONTRACTOR SHALL NOTIFY THE THORNTON INSPECTOR ONCE ALL INITIAL CONTROL MEASURES HAVE BEEN INSTALLED FOR AN INITIAL INSPECTION AT LEAST FORTY EIGHT (48) HOURS PRIOR TO THE INSPECTION. CONSTRUCTION ACTIVITY CANNOT BEGIN UNTIL A PASSING INITIAL INSPECTION HAS OCCURRED.
3. ALL CONTROL MEASURES SHALL BE INSTALLED PER THE APPROVED PLAN. SHOULD ALTERNATIVE CONTROL MEASURES BE DESIRED AT ANY POINT, A RESPONSIBLE PARTY SHALL NOTIFY THE CITY FOR APPROVAL.
4. STORMWATER DISCHARGES FROM CONSTRUCTION ACTIVITIES SHALL NOT CAUSE, HAVE THE REASONABLE POTENTIAL TO CAUSE, OR MEASURABLY CONTRIBUTE TO EXCEED ANY WATER QUALITY STANDARD.
5. CONSTRUCTION SHALL BE PHASED IN A MANNER TO LIMIT EARTH DISTURBING ACTIVITIES (I.E. THE ENTIRE PROJECT SITE SHOULD NOT BE DISTURBED IF CONSTRUCTION WILL ONLY BE OCCURRING IN ONE PARTICULAR SECTION).
6. SEDIMENT CAUSED BY ACCELERATED SOIL EROSION SHALL BE REMOVED FROM RUNOFF WATER BEFORE IT LEAVES THE CONSTRUCTION SITE.
7. BULK STORAGE STRUCTURES FOR PETROLEUM PRODUCTS AND ANY OTHER CHEMICALS SHALL HAVE SECONDARY CONTAINMENT OR EQUIVALENT PROTECTION TO CONTAIN ALL SPILLS AND PREVENT ANY SPILLED MATERIAL FROM ENTERING THE MS4 OR STATE WATERS.
8. A COPY OF THE SWMP AND EROSION AND SEDIMENT CONTROL (ESC) PLANS MUST BE AVAILABLE AT ALL TIMES ON THE CONSTRUCTION SITE UNLESS OTHERWISE APPROVED BY CDPHE OR THORNTON.
9. THE SWMP AND EC PLAN SHALL BE CONTINUOUSLY UPDATED TO REFLECT NEW OR REVISED CONTROL MEASURES (CM) DUE TO CHANGES IN DESIGN, CONSTRUCTION, OPERATION, OR MAINTENANCE OF THE CONSTRUCTION SITE. UPDATES MUST BE MADE WITHIN 72-HOURS FOLLOWING THE CHANGE IN CONTROL MEASURES.
10. THE OWNER/CONTRACTOR SHALL INSPECT THE CONSTRUCTION SITE (INCLUDING ALL CONTROL MEASURES, STORAGE CONTAINERS, AND CONSTRUCTION EQUIPMENT) AT A MINIMUM OF EVERY 7 CALENDAR DAYS OR EVERY 14 CALENDAR DAYS. IF ON THE 14 DAY FREQUENCY A 24-HOUR POST STORM INSPECTION MUST BE CONDUCTED AFTER A PRECIPITATION EVENT OR SNOW MELT. INSPECTIONS SHALL CONTINUE UNTIL AN INACTIVATION NOTICE IS FILED WITH CDPHE.
11. THE OWNER/CONTRACTOR SHALL KEEP A RECORD OF ALL INSPECTIONS ON SITE AND AVAILABLE FOR REVIEW BY CDPHE OR CITY STAFF. INSPECTION REPORTS MUST IDENTIFY ANY INCIDENTS OF NON-COMPLIANCE WITH THE TERMS AND CONDITIONS OF THE PERMIT.
12. CONTROL MEASURES REQUIRING MAINTENANCE OR ADJUSTMENT SHALL BE REPAIRED IMMEDIATELY AFTER OBSERVATION OF THE FAILING CONTROL MEASURE.
13. SILT FENCE PATCHING: PATCHING IS ONLY ALLOWED ON THE TOP HALF OF THE FENCE. NOT MORE THAN TWO (2) PATCHES PER SECTION OF FENCE. SILT FENCE WITH HOLES OR DETERIORATION ON THE LOWER HALF OF THE FENCE MUST BE REPLACED. REPAIR TYPICALLY INVOLVES REPLACING THE SILT FENCE TO MAINTAIN THE CMS EFFECTIVENESS TO DRAIN SLOWLY AND FUNCTION AS ORIGINALLY DESIGNED.
14. REINFORCED OR SUPPLEMENTED CONTROL MEASURES ARE REQUIRED ALONG ALL DRAINAGEWAYS OR CONVEYANCES.
15. FOR ALL INSTANCES OF NONCOMPLIANCE BASED ON ENVIRONMENTAL HAZARDS AND CHEMICAL SPILLS AND RELEASES, ALL NEEDED INFORMATION MUST BE PROVIDED ORALLY TO CDPHE SPILL REPORTING LINE (24-HOUR NUMBER FOR ENVIRONMENTAL HAZARDS AND CHEMICAL SPILLS AND RELEASES: 1-877-518-5608) WITHIN 24-HOURS FROM THE TIME THE OWNER/CONTRACTOR BECOMES AWARE OF THE CIRCUMSTANCES.
16. STRAW BALES SHALL NOT BE USED FOR PRIMARY EROSION OR SEDIMENT CONTROL (I.E. STRAW BALES MAY BE USED FOR REINFORCEMENT BEHIND ANOTHER BMP SUCH AS SILT FENCE).
17. CONTROL MEASURES REFERRED TO AS "CUTBACK CURB" ARE NOT ALLOWED. THE CUTBACK CURB MAY BECOME INEFFECTIVE AND MAY ALSO COMPROMISE THE INTEGRITY OF THE CURB AND IN MOST CASES DOES NOT PROVIDE ANY WATER QUALITY BENEFIT FOR FILTERING OUT SEDIMENT.
18. INLET PROTECTION AND VEGETATIVE BUFFER CONTROL MEASURES SHALL NOT BE USED AS STANDALONE CMS. THESE METHODS MUST BE UTILIZED WITH AT LEAST ONE ADDITIONAL CM.
19. CONTROL MEASURES INTENDED FOR SHEET FLOW SEDIMENT RUNOFF SHALL BE PLACED PARALLEL TO THE SLOPE.
20. ALL CONTROL MEASURES SHALL BE CLEANED WHEN SEDIMENT LEVELS ACCUMULATE TO HALF THE DESIGN OF THE CM UNLESS OTHERWISE SPECIFIED.
21. A VEHICLE TRACKING CONTROL (VTC) SHALL BE PLACED AT ALL ENTRANCES/EXITS FROM THE SITE AS WELL AS ANY EGRESS FROM EXPOSED DIRT TO PAVED AREAS TO PREVENT TRACK-OUT ONTO STREETS. IF TRACK-OUT DOES OCCUR, THE OWNER/CONTRACTOR SHALL IMMEDIATELY SWEEP THE STREET OF DEBRIS. RECYCLED CRUSHED CONCRETE OR ASPHALT SHALL NOT BE USED FOR VEHICLE TRACKING PADS.
22. FOR RESIDENTIAL PROJECTS, BACK OF CURB PROTECTION IS REQUIRED ALONG ALL INTERIOR LOTS.
23. ALL SEDIMENT COLLECTED IN CONTROL MEASURES SHALL BE REMOVED UPON INITIAL ACCEPTANCE.
24. USAGE OF RECYCLED CONCRETE IS PROHIBITED THROUGHOUT THE SITE. THIS INCLUDES BUT IS NOT LIMITED TO ANY USAGE IN THE VICINITY OF A TREATMENT FEATURE, STAGING OR TEMPORARY ROADWAY MATERIAL, OR AS PART OF MAINTENANCE ACCESS ROADS.
25. WIND EROSION AND DUST CONTROL MEASURES MUST BE UTILIZED TO MINIMIZE AIRBORNE PARTICULATE DUST. CONTROL MEASURES MAY INCLUDE MINIMIZING DISTURBED AREAS, WATERING, AND/OR PROVIDING TEMPORARY STABILIZATION.
26. FOR ALL USAGE OF ROLLED EROSION CONTROL PRODUCTS, ONLY BIODEGRADABLE NETTING AND STAKES SHALL BE USED.
27. PERMANENT EROSION CONTROL MEASURES FOR SLOPES, CHANNELS, DITCHES, OR ANY DISTURBED LAND AREA SHALL BE COMPLETED WITHIN 14 CALENDAR DAYS AFTER FINAL GRADING OR THE FINAL EARTH DISTURBANCE HAS BEEN COMPLETED. WHEN IT IS NOT POSSIBLE TO PERMANENTLY STABILIZE A DISTURBED AREA AFTER AN EARTH DISTURBANCE HAS BEEN COMPLETED OR WHERE SIGNIFICANT EARTH DISTURBANCE ACTIVITY CEASES, TEMPORARY SOIL EROSION CONTROL MEASURES SHALL BE IMPLEMENTED WITHIN 14 CALENDAR DAYS. TEMPORARY EROSION CONTROL MEASURES SHALL BE MAINTAINED UNTIL PERMANENT SOIL EROSION MEASURES ARE IMPLEMENTED.
28. FINAL STABILIZATION HAS BEEN ACHIEVED WHEN ALL EARTH DISTURBING ACTIVITIES AT THE SITE HAVE BEEN COMPLETED, AND UNIFORM VEGETATIVE COVER HAS BEEN ESTABLISHED WITH AN INDIVIDUAL PLANT DENSITY OF AT LEAST 70 PERCENT OF PRE-DISTURBANCE LEVELS, OR EQUIVALENT PERMANENT, PHYSICAL EROSION REDUCTION METHODS HAVE BEEN EMPLOYED.
29. CITY OF THORNTON RECOMMENDS TEMPORARY OR PERMANENT IRRIGATION WHERE APPROPRIATE TO ACHIEVE FUNCTIONALITY.
30. ALL TEMPORARY CONTROL MEASURES SHALL BE REMOVED FROM THE SITE UPON SUBMITTING THE INACTIVATION NOTICE.
31. ALL SITE WASTES (INCLUDING TRASH AND BUILDING MATERIALS) MUST BE PROPERLY MANAGED TO PREVENT POTENTIAL POLLUTION DISCHARGES TO THE MS4 OR STATE WATERS.
32. STREET REPAIR OPERATIONS SUCH AS ROTOR MILLING, SLURRY SEAL AND CHIP SEAL. THE MINIMUM CMS REQUIRED ARE; INLET PROTECTION, CURB SOCKS AND STREET SWEEPING.

CITY OF THORNTON BMP LEGEND:

CF		CONSTRUCTION FENCE
CW	LOC	CONCRETE WASHOUT/ LIQUID WASTE WASHOUT LIMITS OF CONSTRUCTION
LOC		
SCL		SEDIMENT CONTROL LOG
SM		SEEDING AND MULCHING
SSA		STABILIZED STAGING AREA
VTC		VEHICLE TRACKING CONTROL

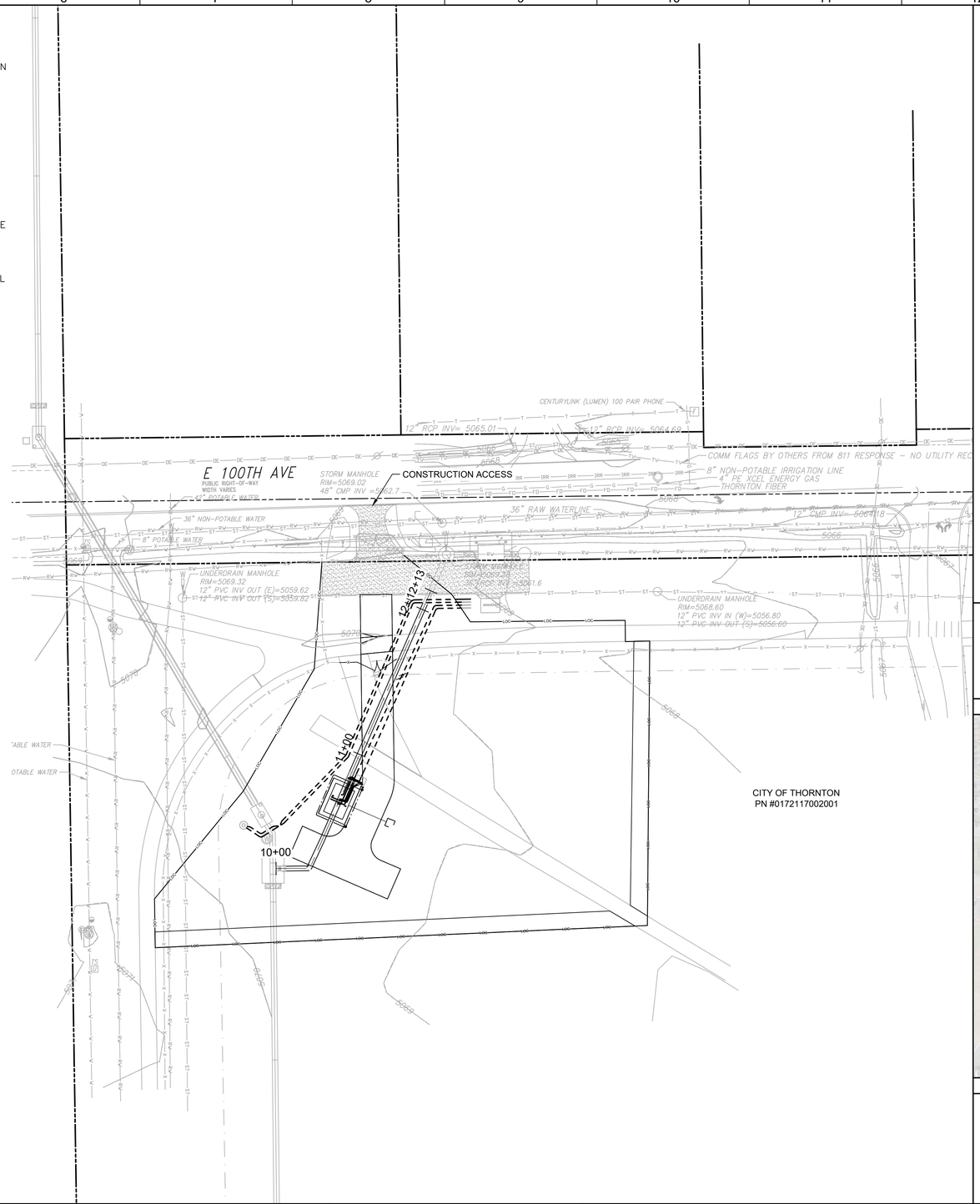

GENERAL NOTES:

1. BASIS OF SURVEY: NAD 1983/2011 AND NAVD88. SEE SURVEY CONTROL DIAGRAM FOR MORE DETAILED DESCRIPTION.

811 Know what's below. Call before you dig.

Call before you Overhead

KEY MAP

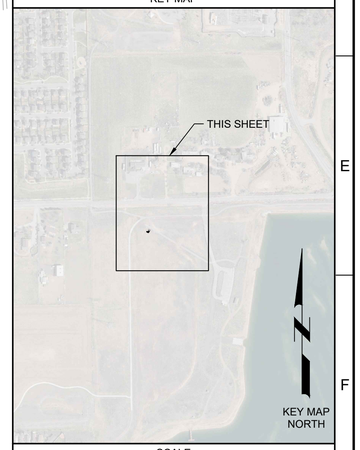

SCALE

0 10' 20' 40'

SCALE: 1" = 20' (HORIZ)

REV	DATE	BY	DESCRIPTION
			BID SET

DESIGNED RJF
DRAWN RJF
CHECKED JJK
DATE MAY 2026

COLORADO LICENSED COURTNEY D. HUSTED 55165 Digitally signed by Courtney D Husted Date: 2026.05.04 09:40:51 -06'00' PROFESSIONAL ENGINEER

carollo

THORNTON WATER PROJECT

CITY OF THORNTON - THORNTON WATER PROJECT

CHEMICAL BUILDING AND PRV VAULTS

CIVIL

LCC PRV - EROSION CONTROL NOTES, LEGEND, AND ACCESS MAP

VERIFY SCALES
BAR IS ONE INCH ON ORIGINAL DRAWING
0 1"
IF NOT ONE INCH ON THIS SHEET, ADJUST SCALES ACCORDINGLY

JOB NO. 204403
DRAWING NO. 30EC01
SHEET NO. 49 OF 168

LAST SAVED BY: CHusted

PROJECT NO. 200417-100000 FILE NAME: 204403_30EC01.dwg

Plot Date: 5/4/2026 6:46:26 AM

E 100TH AVE
PUBLIC RIGHT-OF-WAY
WIDTH VARIES

CENTURYLINK (LUMEN) 100 PAIR PHONE
12" RCP INV= 5065.01
12" RCP INV= 5064.69
COMM FLAGS BY OTHERS FROM 811 RESPONSE – NO UTILITY RECORDS FOUND
8" NON-POTABLE IRRIGATION LINE
4" PE XCEL ENERGY GAS
THORNTON FIBER
42" POTABLE WATER
36" NON-POTABLE WATER
8" POTABLE WATER
STORM MANHOLE
RIM=5069.02
48" CMP INV =5062.7
36" RAW WATERLINE
12" CMP INV= 5064.18
INITIAL/INTERIM
VTC
INITIAL/INTERIM
CW
UNDERDRAIN MANHOLE
RIM=5069.32
12" PVC INV OUT (E)=5059.62
12" PVC INV OUT (S)=5059.82
STORM MANHOLE
RIM=5069.28
36" RCP INV =5061.6
UNDERDRAIN MANHOLE
RIM=5068.60
12" PVC INV IN (W)=5056.80
12" PVC INV OUT (S)=5056.60
12+13
12+00
11+00
10+00
INITIAL/INTERIM
CF
EX. SOIL-BENTONITE
SLURRY WALL
INITIAL/INTERIM
SSA
CONSTRUCTION
STAGING AREA
100'x100'
INITIAL/INTERIM
SCL
FLOW (TYP)
INITIAL/INTERIM
SCL
CITY OF THORNTON
PN #0172117002001

GENERAL NOTES:

1. BASIS OF SURVEY: NAD 1983/2011 AND NAVD88. SEE SURVEY CONTROL DIAGRAM FOR MORE DETAILED DESCRIPTION.

X KEY NOTES:

1. INSTALL TRAIL CLOSED SIGN WITH BARRIER FENCE.

811 Know what's below. Call before you dig.

Call before you Overhead

KEY MAP

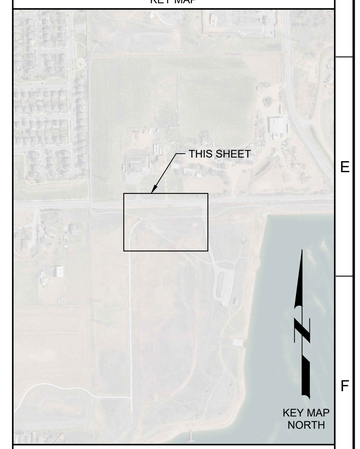

SCALE

0 10' 20' 40'
SCALE: 1" = 20' (HORIZ)

REV	DATE	BY	DESCRIPTION
			BID SET

DESIGNED RJF
DRAWN RJF
CHECKED JJK
DATE MAY 2026

COLORADO LICENSED
COURTNEY D. HUSTED
55165
PROFESSIONAL ENGINEER

carollo

THORNTON WATER PROJECT

CITY OF THORNTON - THORNTON WATER PROJECT
CHEMICAL BUILDING AND PRV VAULTS
CIVIL
LCC PRV - EROSION CONTROL PLAN
INITIAL/INTERIM

VERIFY SCALES
BAR IS ONE INCH ON ORIGINAL DRAWING
0 1"
IF NOT ONE INCH ON THIS SHEET, ADJUST SCALES ACCORDINGLY

JOB NO. 204403
DRAWING NO. 30EC02
SHEET NO. 50 OF 168

LAST SAVED BY: CHusted

PROJECT NO. 200417-100000 FILE NAME: 204403_30EC02.dwg

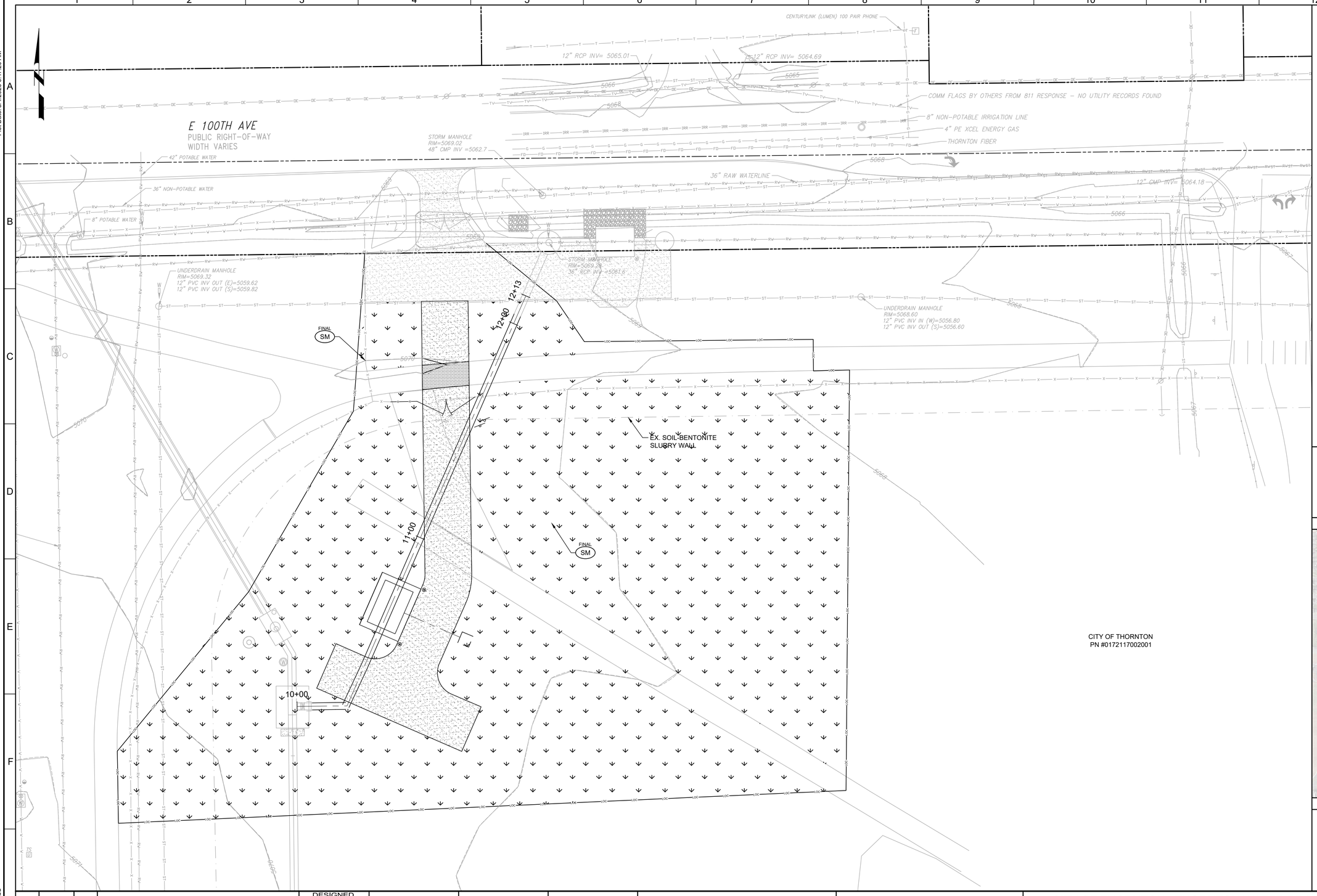

GENERAL NOTES:

1. BASIS OF SURVEY: NAD 1983/2011 AND NAVD88. SEE SURVEY CONTROL DIAGRAM FOR MORE DETAILED DESCRIPTION.

811 Know what's below. Call before you dig.

Call before you Overhead

KEY MAP

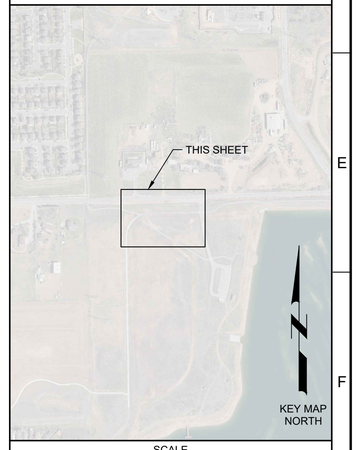

SCALE

0 10' 20' 40'

SCALE: 1" = 20' (HORIZ)

REV	DATE	BY	DESCRIPTION
			BID SET

DESIGNED RJF
DRAWN RJF
CHECKED JJK
DATE MAY 2026

COLORADO LICENSED COURTNEY D. THURSTON 55165 PROFESSIONAL ENGINEER

CITY OF THORNTON - THORNTON WATER PROJECT

CHEMICAL BUILDING AND PRV VAULTS

CIVIL

LCC PRV - EROSION CONTROL PLAN
FINAL

VERIFY SCALES
BAR IS ONE INCH ON ORIGINAL DRAWING
0 1"
IF NOT ONE INCH ON THIS SHEET, ADJUST SCALES ACCORDINGLY

JOB NO. 204403
DRAWING NO. 30EC03
SHEET NO. 51 OF 168

LAST SAVED BY: Chusted

PROJECT NO. 200417-100000 FILE NAME: 204403_30EC03.dwg

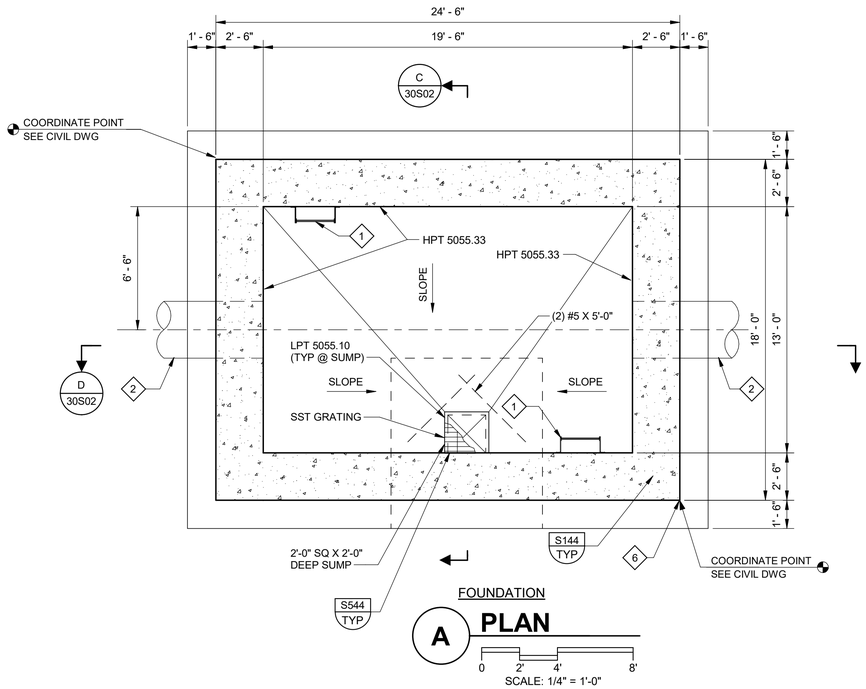

FOUNDATION

A PLAN

0 2' 4' 8'

SCALE: 1/4" = 1'-0"

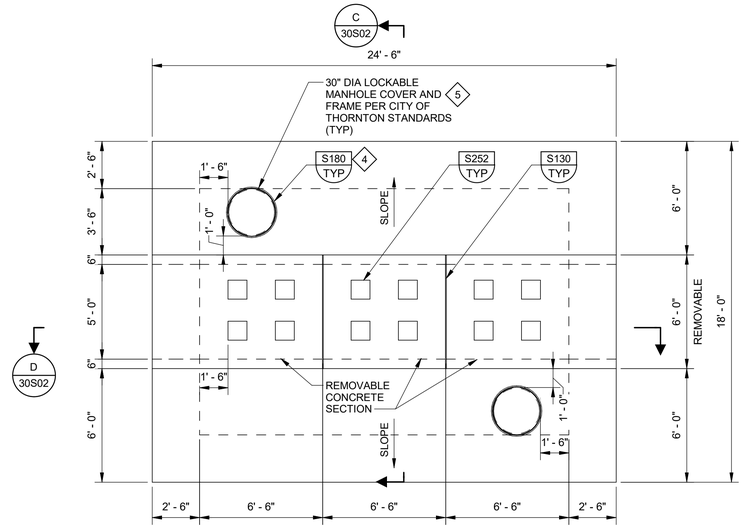

UPPER

B PLAN

0 2' 4' 8'

SCALE: 1/4" = 1'-0"

GENERAL NOTES:

1. SEE DRAWING 00GS01 FOR GENERAL STRUCTURAL NOTES.
2. REFER TO DRAWING 65C02 - FOR LOCATION OF PRV VAULT.

KEY NOTES:

1. PROVIDE SAF-T-CLIMB GUIDE RAIL AND LADDER UP SYSTEM OR EQUAL. CENTER LADDER ON MANHOLE OPENING.
2. SEE MECHANICAL DRAWING FOR SIZE AND ELEVATION OF PIPE OPENING.
3. SLOPE FLOOR IN VAULT TO DRAIN TO SUMP.
4. ADD (2) #6 REBAR T&B ON ALL SIDES OF OPENING PER DETAIL S180/TYP.
5. A LOCKING MANHOLE RING AND COVER SHALL BE INSTALLED. LOCKING LIDS SHALL BE DRILLED AND TAPPED FOR LOCKING BOLTS. LOCKING BOLTS SHALL BE MCGARD INTIMIDATOR (2 PER MANHOLE) PART NUMBER 127003.077-CITY OF THORNTON. DUE TO THE PROPRIETARY SECURE NATURE OF THE MCGARD MANLOCKS, CONTRACTOR TO COORDINATE WITH THE CITY TO ENSURE THAT PROPER BOLTS ARE PROVIDED.
6. REFER TO CIVIL PLAN SHEET 65C02 FOR THE COORDINATE CONTROL POINT OF PRV VAULT.

STRUCTURE DESIGN INFORMATION:

1. BUILDING CODE
   a. 2024 INTERNATIONAL BUILDING CODE (IBC)
   b. CITY OF THORNTON AMENDMENTS
2. STRUCTURE USE: WATER TREATMENT
3. RISK CATEGORY: IV
4. LIVE LOADS: (SEE PLANS FOR ADDL INFO.)
   a. FLOOR: UNIFORM: 150 PSF
   b. ROOF LIVE LOAD: 200 PSF
5. SEISMIC:

		0.2 SECOND	*1.0 SECOND
a.	SITE CLASS: C.		
b.	MAPPED SPECTRAL RESPONSE ACCELERATIONS	Ss = 0.18g	S1 = 0.043 g
c.	MAXIMUM CONSIDERED ACCELERATIONS:	Sms = 0.23 g	Sm1 = 0.096 g
d.	DESIGN SPECTRAL RESPONSE ACCELERATIONS: (* 5% DAMPED)	Sds = 0.15 g	Sd1 = 0.064

   e. SEISMIC IMPORTANCE FACTOR: Ie = 1.50.
   f. SEISMIC DESIGN CATEGORY: A
6. FOUNDATION
   a. LATERAL EARTH PRESSURE (UNO)

	ABOVE GWT	BELOW GWT
ACTIVE (PSF/FT)		
AT-REST (PSF/FT)	42	83
PASSIVE (PSF/FT)	63	94

   b. PRV VAULT - ALLOWABLE BEARING PRESSURE 3250
      1. 3000 PSF
      2. 1/3 INCREASE ALLOWED FOR SHORT TERM LOADING
      3. COEFFICIENT OF FRICTION: 0.4
   c. GROUNDWATER ELEV: 5087.

REV	DATE	BY	DESCRIPTION
			BID SET

DESIGNED NV
DRAWN DG
CHECKED MAK
DATE APRIL 2026

COLORADO REGISTERED MARK ALAN KELLEY 34300 PROFESSIONAL ENGINEER

Digitally signed by Mark Alan Kelley
Date: 2026.04.01 10:47:09 -06'00'

carollo®

THORNTON WATER PROJECT

CITY OF THORNTON-THORNTON WATER PROJECT

CHEMICAL BUILDING AND PRV VAULTS

STRUCTURAL

LCC PRV - VAULT
FOUNDATION AND UPPER PLAN

VERIFY SCALES
BAR IS ONE INCH ON ORIGINAL DRAWING
0 1"
IF NOT ONE INCH ON THIS SHEET, ADJUST SCALES ACCORDINGLY

JOB NO. 204403
DRAWING NO. 30S01
SHEET NO. 52 OF 168

PLOT DATE: 4/1/2026 11:50:48 AM

FILE NAME: R:\d0583920\204403_30S0801.rvt

GENERAL NOTES:

1. SEE DRAWING 00GS01 FOR GENERAL STRUCTURAL NOTES.
2. REFER TO CIVIL DRAWINGS FOR FINISH GRADE.

KEY NOTES:

1. PROVIDE GUIDE RAIL AND LADDER UP SIMILAR TO SAF-T-CLIMB LADDER SYSTEM OR EQUAL.
2. BACKFILL AROUND STRUCTURE WITH COMPACTED SELECT FILL.
3. PROVIDE 1/2" THICK NEOPRENE AT THE CONCRETE LID INTERFACE TO THE TOP OF CONCRETE ROOF SLAB.

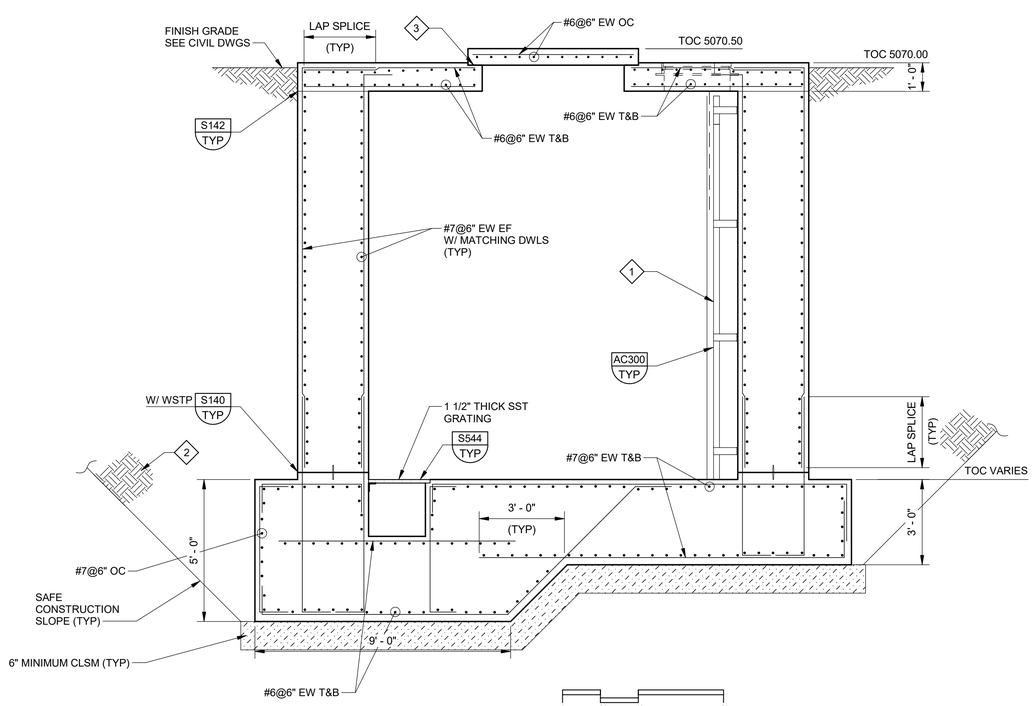

0 2' 4' 6'

SCALE: 3/8" = 1'-0"

C SECTION 30S01

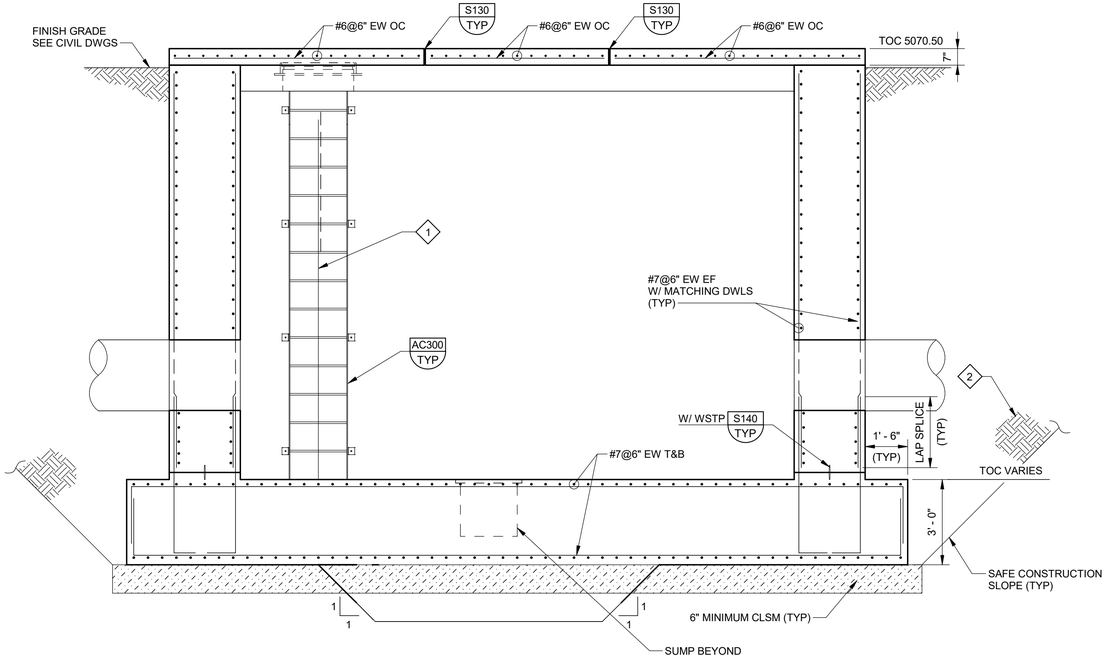

0 2' 4' 6'

SCALE: 3/8" = 1'-0"

D SECTION 30S01

REV	DATE	BY	DESCRIPTION
			BID SET

DESIGNED NV
DRAWN DG
CHECKED MAK
DATE APRIL 2026

COLORADO REGISTERED
MARK ALAN KELLER
34300
PROFESSIONAL ENGINEER

carollo®

THORNTON WATER PROJECT

CITY OF THORNTON-THORNTON WATER PROJECT

CHEMICAL BUILDING AND PRV VAULTS

STRUCTURAL

LCC PRV - VAULT
SECTIONS

VERIFY SCALES
BAR IS ONE INCH ON ORIGINAL DRAWING
0 1"
IF NOT ONE INCH ON THIS SHEET, ADJUST SCALES ACCORDINGLY

JOB NO. 204403
DRAWING NO. 30S02
SHEET NO. 53 OF 168

PLOT DATE: 4/1/2026 11:50:49 AM

FILE NAME: R:\d0583920\204403_30S0801.rvt

Plot Date: 3/25/2026 12:18:15 PM

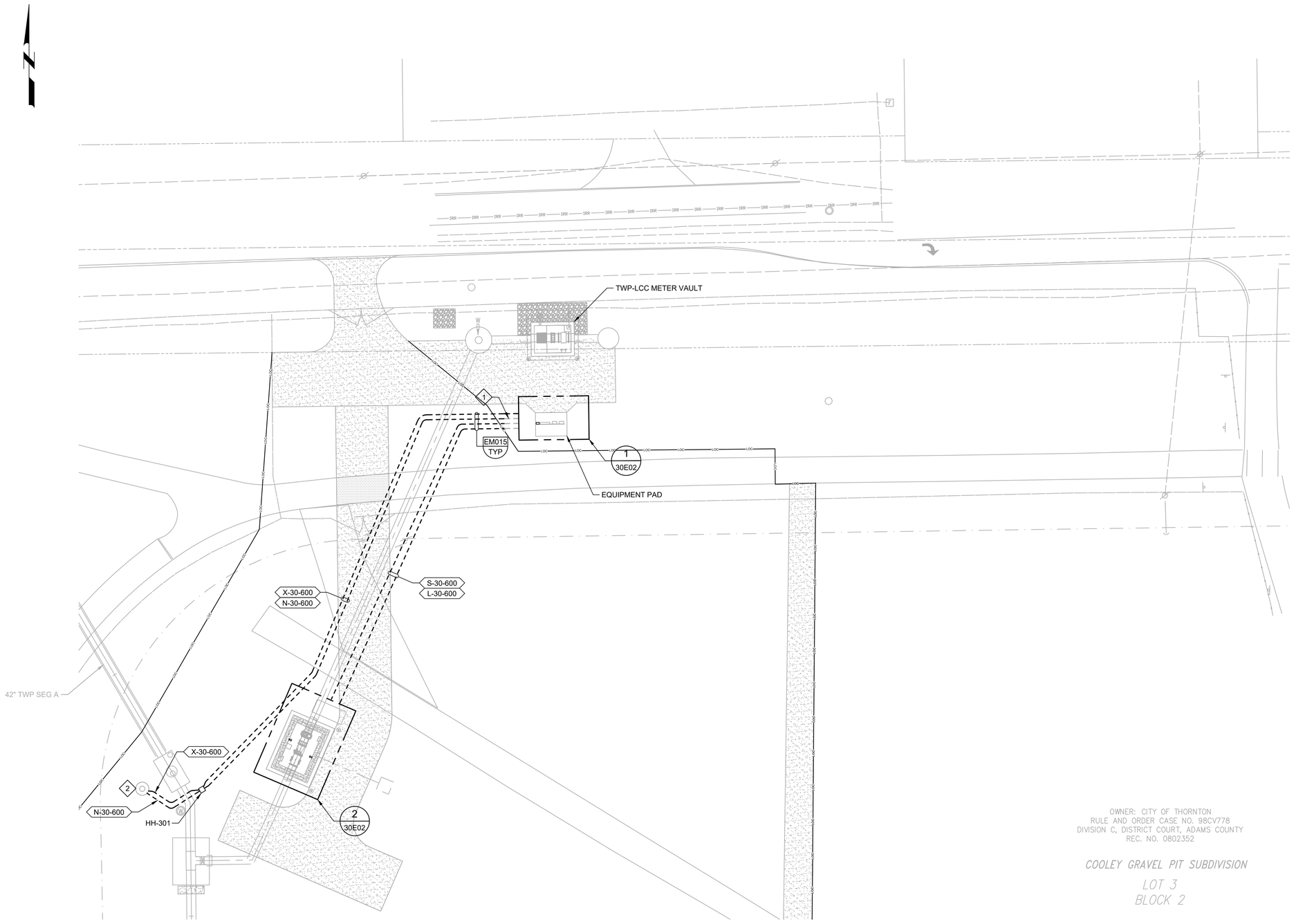

A PLAN
SCALE: 1" = 20'

KEY NOTES:

1. INTERCEPT EXISTING CONDUIT STUBOUTS NEAR THIS LOCATION.
2. PROVIDE CONDUIT TO EXISTING FIBER OPTIC HANDHOLE. FIBER CABLE AND TERMINATIONS TO BE PROVIDED BY OTHERS.

811
Know what's **below.**
Call before you dig.

KEY MAP

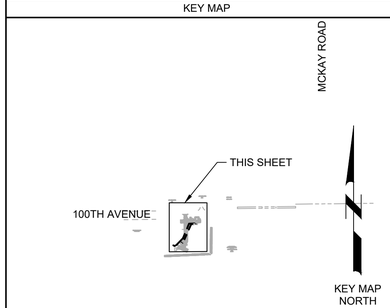

SCALE

0 10' 20' 40'
SCALE: 1" = 20'

REV	DATE	BY	DESCRIPTION
			BID SET

DESIGNED KWG
DRAWN SGH
CHECKED SLB
DATE MAY 2026

COLORADO LICENSED PROFESSIONAL ENGINEER 55107

carollo

THORNTON WATER PROJECT

CITY OF THORNTON - THORNTON WATER PROJECT
CHEMICAL BUILDING AND PRV VAULTS
ELECTRICAL
LCC PRV - ELECTRICAL SITE PLAN

VERIFY SCALES
BAR IS ONE INCH ON ORIGINAL DRAWING
0 1"
IF NOT ONE INCH ON THIS SHEET, ADJUST SCALES ACCORDINGLY

JOB NO. 204403
DRAWING NO. 30E01
SHEET NO. 54 OF 168

LAST SAVED BY: GHerrera

PROJECT NO. 204403-100000 FILE NAME: 204403_30E01.dwg

Plot Date: 5/6/2026 2:57:45 PM

GENERAL NOTES:

1. PROVIDE CONDUIT HOUSEKEEPING CURB WHERE CONDUITS PENETRATE THE EQUIPMENT SLAB, PER DETAIL EM107/TYP.
2. INSTALL JUNCTION BOXES WITH DRAIN FITTINGS. INSTALL JUNCTION BOXES AT CEILING AREA OR AT HIGHER WALLS AS APPLICABLE.
3. ROUTE EXPOSED CONDUITS IN VAULT PER DETAILS EA070/TYP AND EA075/TYP AS NECESSARY.
4. PROVIDE BELOW GRADE CONDUIT WALL PENETRATIONS PER DETAIL EM133/TYP.

KEY NOTES:

1. PROVIDE FIBER OPTIC PATCH PANEL. DISCONNECT EXISTING SPARE NETWORK CONDUIT FROM PCM AND ROUTE TO FIBER PATCH PANEL. EXTEND EQUIPMENT STAND AS NEEDED.
2. EXISTING CONDUIT STUB OUTS. CONNECT NEW CONDUIT AND ROUTE TO PRV VAULT. REFERENCE 30E01 FOR CONDUIT ROUTING.
3. ADD CONDUIT TEE TO EXISTING CONDUIT AND ROUTE TO PCM.
4. PROVIDE NEMA 4X SS ENCLOSURE FOR PITS. SIZE AS REQUIRED.
5. INSTALL SWITCH 12" BELOW HATCH OPENING.
6. INSTALL RECEPTACLE 48" ABOVE FINISHED FLOOR.
7. FILLED CAPILLARY PER SPECIFICATION 40_73_63.

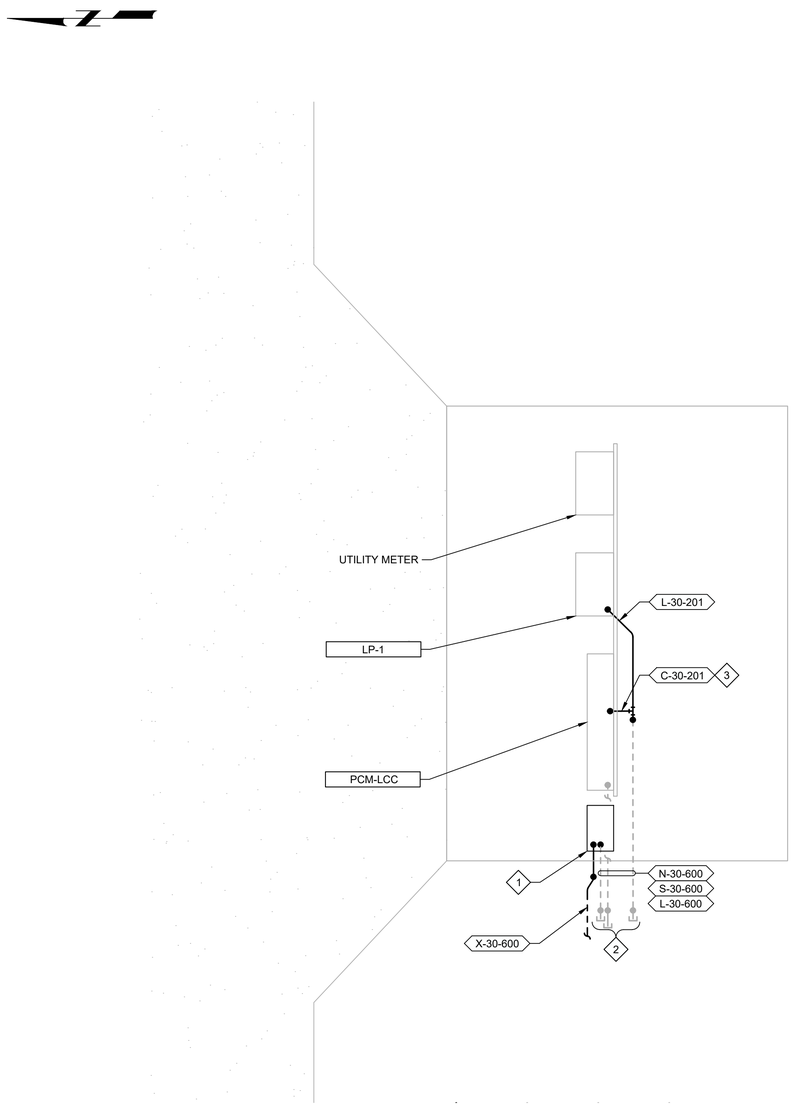

1 DETAIL
30E01
SCALE: 1/2" = 1'-0"

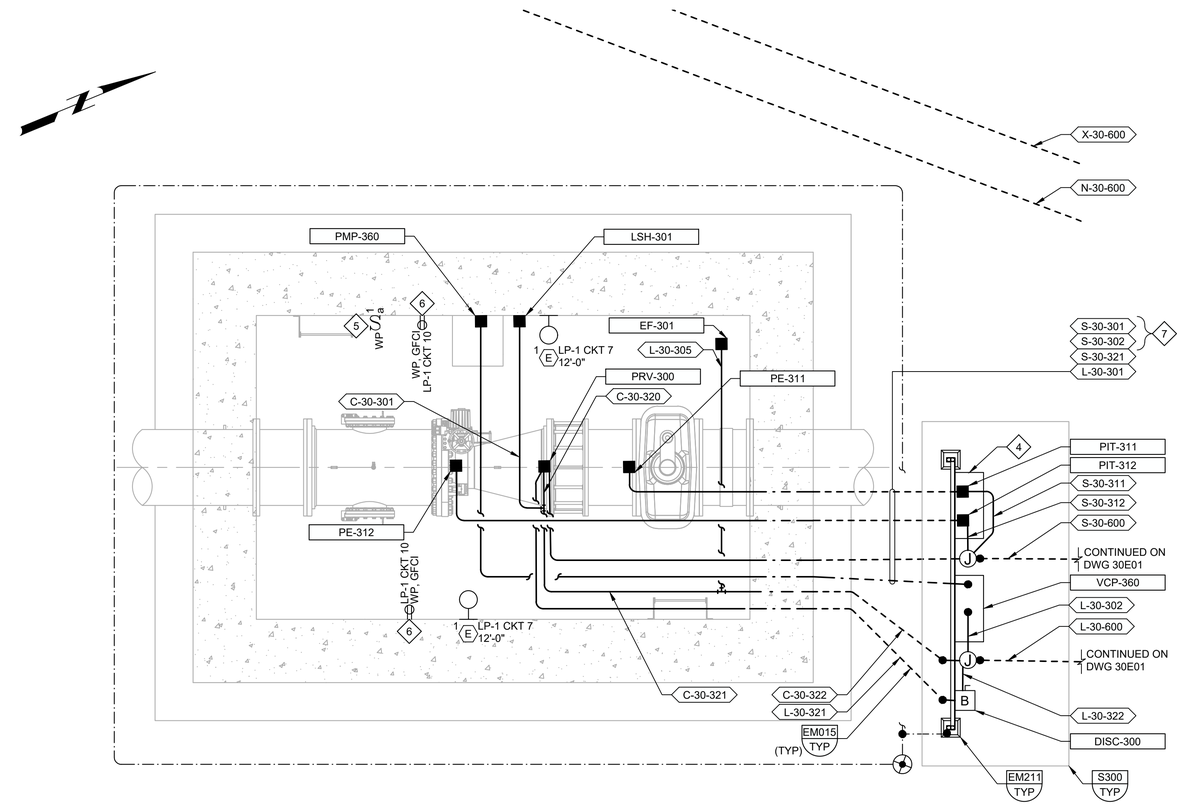

2 DETAIL
30E01
SCALE: 3/8" = 1'-0"

REV	DATE	BY	DESCRIPTION
			BID SET

DESIGNED KWG
DRAWN SGH
CHECKED SLB
DATE MAY 2026

COLORADO LICENSED PROFESSIONAL ENGINEER
55107

carollo

THORNTON WATER PROJECT

CITY OF THORNTON - THORNTON WATER PROJECT
CHEMICAL BUILDING AND PRV VAULTS
ELECTRICAL
LCC PRV -
ELECTRICAL SITE PLAN DETAIL

VERIFY SCALES
BAR IS ONE INCH ON ORIGINAL DRAWING
0 1"
IF NOT ONE INCH ON THIS SHEET, ADJUST SCALES ACCORDINGLY

JOB NO. 204403
DRAWING NO. 30E02
SHEET NO. 55 OF 168

LAST SAVED BY: FOlivares

PROJECT NO. 204403-100000 FILE NAME: 204403_30E02.dwg

Plot Date: 5/5/2026 2:37:59 PM

PANEL LP-1

5/5/2026

LOCATION:	TWP-LCC DIVERSION METER VAULT AREA	NEMA:	4X	PH A WEIGHTED VA	4345
VOLTS:	240/120	FEED:	BOTTOM	PH B WEIGHTED VA	5733
PHASE & WIRE:	1 PH 3W	MTG.	SURFACE		
INTERRUPT:	22 KAIC	BUS RATING:	100		
OPTIONS:	SPD	MAIN:	CB	EQUIP SIZING VA	11465
		MAIN RATING:	100 AF 100 AT	PANEL AMPS	47.8

I/C/S	DESCRIPTION	LOAD (VA)	BKR	CIR	Ø	CIR	BKR	LOAD (VA)	DESCRIPTION	I/C/S
C	TWP-LCC DIVERSION METER VAULT LIGHTING	140	20A-1P	1	A	2	20A-1P	360	TWP-LCC DIVERSION METER VAULT RECEPTACLES	I
C	PCM-LCC CABINET	1500	20A-1P	3	B	4	20A-1P	1500	VCP-760 - TWP-LCC DIVERSION METER SUMP PUMP CONTROL PANEL	I
I	PCM-LCC CABINET ACCESSORIES	500	20A-1P	5	A	6	20A-2P	1450	PRV-300 - SLEEVE VALVE	I
C	PRV VAULT LIGHTING	30	20A-1P	7	B	8		1450		I
I	VCP-360 - PRV VAULT SUMP PUMP CONTROL PANEL 1	1500	20A-1P	9	A	10	15A-1P	360	PRV VAULT RECEPTACLES 1	I
	SPARE		20A-1P	11	B	12	15A-1P	696	EF-301 - LCC PRV EXHAUST FAN	C
	SPARE		20A-1P	13	A	14	20A-1P		SPARE	
	SPARE		20A-1P	15	B	16	20A-1P		SPARE	
	SPARE		20A-1P	17	A	18	20A-1P		SPARE	
	SPARE		20A-1P	19	B	20	20A-1P		SPARE	
	SPARE		20A-1P	21	A	22	20A-1P		SPARE	
	SPARE		20A-1P	23	B	24	20A-1P		SPARE	

KEY NOTES:

1. TERMINATE NEW LOAD ON EXISTING CIRCUIT BREAKER.

LAST SAVED BY: FOlivares

REV	DATE	BY	DESCRIPTION
			BID SET

DESIGNED KWG
DRAWN SGH
CHECKED SLB
DATE MAY 2026

COLORADO LICENSED 55107 PROFESSIONAL ENGINEER

carollo

THORNTON WATER PROJECT

CITY OF THORNTON - THORNTON WATER PROJECT

CHEMICAL BUILDING AND PRV VAULTS

ELECTRICAL

LCC PRV - PANELBOARD SCHEDULE

VERIFY SCALES
BAR IS ONE INCH ON ORIGINAL DRAWING
0 1"
IF NOT ONE INCH ON THIS SHEET, ADJUST SCALES ACCORDINGLY

JOB NO. 204403
DRAWING NO. 30E03
SHEET NO. 56 OF 168

PROJECT NO. 204403-100000 FILE NAME: 204403_30E03.dwg

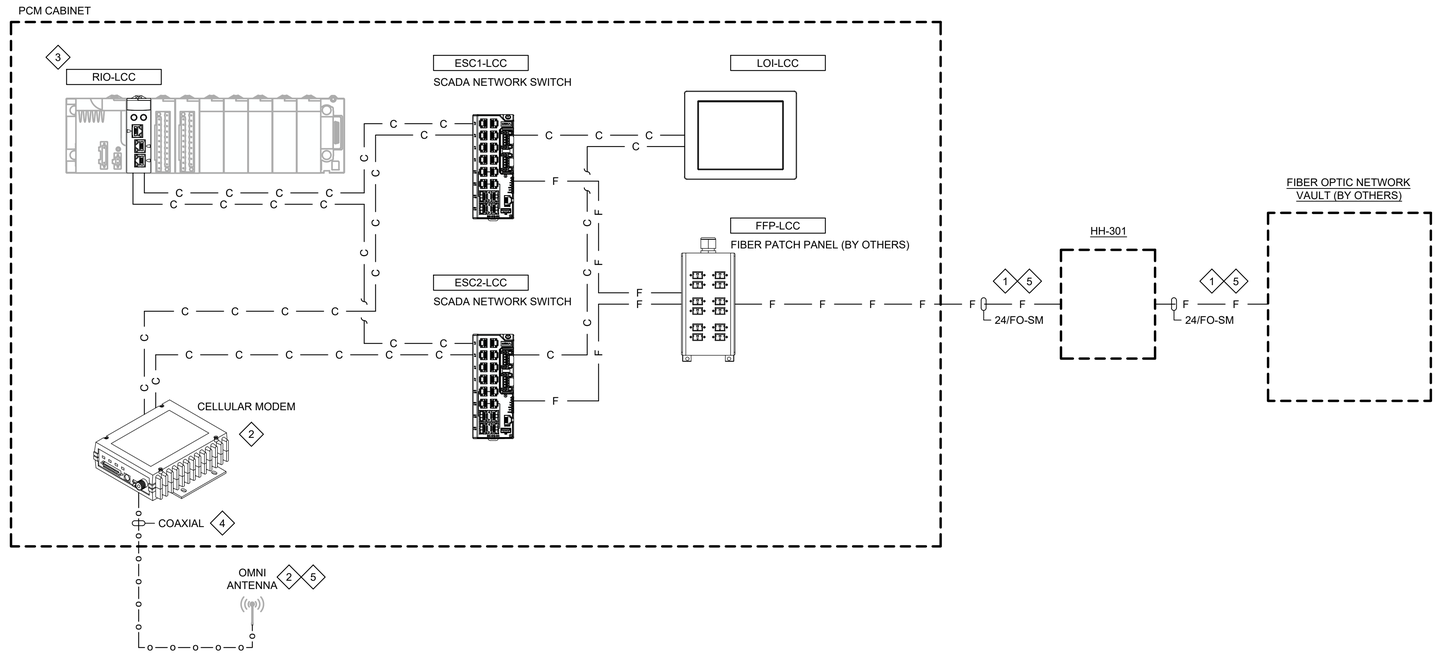

GENERAL NOTES:

1. PROVIDE ADDITIONAL HARDWARE AND CONFIGURATION AS NEEDED FOR A FULLY FUNCTIONAL SYSTEM.

KEY NOTES:

1. FIBER OPTIC NETWORK CABLES, FIBER PATCH PANEL AND TERMINATIONS PROVIDED BY OTHERS. COPPER AND FIBER OPTIC PATCH CABLES AND TERMINATIONS BETWEEN THE FIBER PATCH PANEL AND COMPONENTS INSIDE THE PCM CABINET PROVIDED BY THE CONTRACTOR.
2. SALVAGE EXISTING RADIO, CABLE AND ANTENNA (TO THE OWNER) AND REPLACE WITH NEW CELLULAR MODEM PROVIDED WITH OMNI ANTENNA. REFER TO SPECIFICATIONS FOR ADDITIONAL INFORMATION.
3. SALVAGE EXISTING MODICON M340 PLC TO THE OWNER. REPLACE WITH MODICON X80 REMOTE I/O MODULE.
4. PROVIDE SURGE PROTECTION FOR COAXIAL ANTENNA CABLE.
5. PROVIDED AND CONFIGURED BY THE OWNER, INSTALLED BY CONTRACTOR AS PART OF THE SOURCE WATER PUMP STATION AND FIBER OPTIC PROJECTS.

REV	DATE	BY	DESCRIPTION
			BID SET

DESIGNED RDG
DRAWN LR
CHECKED JM
DATE MAY 2026

COLORADO LICENSED
ALLEN GROAT
55107
Digitally signed by Kellen W Groat
Date: 2026.05.08 14:24:44 -06'00'
PROFESSIONAL ENGINEER

CITY OF THORNTON - THORNTON WATER PROJECT
CHEMICAL BUILDING AND PRV VAULTS
INSTRUMENTATION
LCC PRV - NETWORKS
NETWORK BLOCK DIAGRAM

VERIFY SCALES
BAR IS ONE INCH ON ORIGINAL DRAWING
0 1"
IF NOT ONE INCH ON THIS SHEET, ADJUST SCALES ACCORDINGLY

JOB NO. 204403
DRAWING NO. 30N01
SHEET NO. 57 OF 168

LAST SAVED BY: CRollins

PROJECT NO. 204403-100000 FILE NAME: 204403_30N01.dwg

GENERAL NOTES:

1. REFER TO ELECTRICAL PLANS FOR LOCATION OF ALL ENCLOSURES. MODIFICATIONS TO THE EXISTING PCM PANEL SHALL MEET UL AND NEC REQUIREMENTS.
2. FOLLOW ALL UL 508 AND 508A SUPPLEMENT SB REQUIREMENTS WHEN MAKING FIELD MODIFICATIONS TO THE EXISTING PCM PANEL.
3. ALL CONDUIT PENETRATIONS SHALL BE LOCATED AT THE BOTTOM OF THE ENCLOSURE. NO TOP, SIDE, FRONT, OR REAR PENETRATIONS ALLOWED.
4. ALL EXPOSED METALS TO BE PAINTED CITY OF THORNTON STANDARD MOCHA BROWN.

(#) KEY NOTES:

1. ESTIMATED SIZE, FINAL SIZE BY CONTRACTOR.

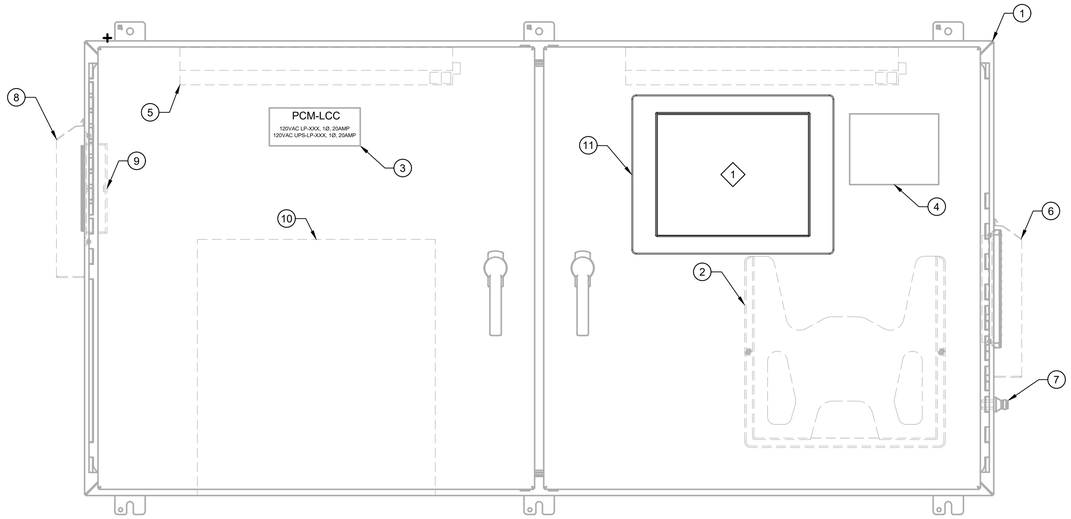

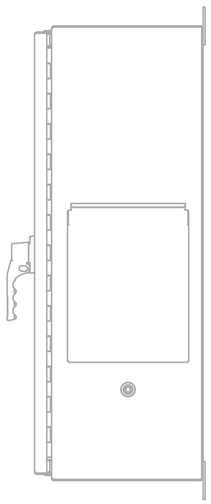

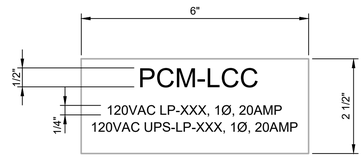

MAJOR EQUIPMENT SCHEDULE	
ITEM	DESCRIPTION
1	ENCLOSURE, NEMA 4X
2	DATA POCKET
3	NAMEPLATE
4	MANUFACTURER'S LABEL
5	LIGHT W/ INTRUSION SWITCH
6	EXHAUST SHROUD
7	SURGE PROTECTOR
8	INTAKE SHROUD
9	COOLING FAN
10	UNINTERRUPTIBLE POWER SUPPLY
11	LOCAL OPERATOR INTERFACE (LOI)

REV	DATE	BY	DESCRIPTION
			BID SET

DESIGNED RDG
DRAWN LR
CHECKED JM
DATE MAY 2026

COLORADO LICENSED KELLEN GRABB 55107 Digitally signed by Kellen W Grabb Date: 2026.03.13 10:27:04 -06'00' Professional Engineer

CITY OF THORNTON - THORNTON WATER PROJECT

CHEMICAL BUILDING AND PRV VAULTS

INSTRUMENTATION

LCC PRV - PANELS
PCM PANEL EXTERNAL ELEVATION

VERIFY SCALES
BAR IS ONE INCH ON ORIGINAL DRAWING
0 1"
IF NOT ONE INCH ON THIS SHEET, ADJUST SCALES ACCORDINGLY

JOB NO. 204403
DRAWING NO. 30N02
SHEET NO. 58 OF 168

LAST SAVED BY: DCosme

PROJECT NO. 204403-100000 FILE NAME: 204403_30N02.dwg

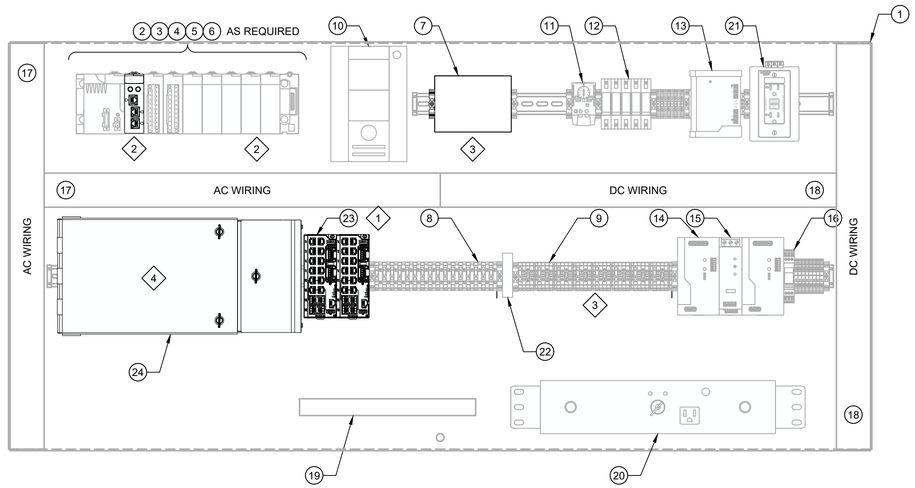

GENERAL NOTES:

1. ENCLOSURE DRAWING REPRESENTS DESIGN INTENT. CONTRACTOR TO SUPPLY AS-BUILT DRAWINGS SHOWING FINAL ENCLOSURE LAYOUT WITH ALL EQUIPMENT, MANUFACTURERS, AND PART NUMBERS.
2. REFER TO ELECTRICAL PLANS FOR LOCATION OF ALL ENCLOSURES. CONSTRUCT PANEL TO MEET THE FULL INTENT OF ARTICLE 409 OF THE NATIONAL ELECTRIC CODE.
3. FOLLOW ALL UL 508 AND 508A SUPPLEMENT SB REQUIREMENTS TO DETERMINE SHORT CIRCUIT RATINGS.
4. CIRCUIT BREAKERS SHALL BE COORDINATED TO TRIP BRANCH CIRCUIT BREAKER PRIOR TO THE MAIN PANEL CIRCUIT BREAKER.
5. ALL TIE WRAPS SHALL BE LOCATED OUTSIDE OF THE WIRE DUCTS. INSTALLATION OF ALL NYLON TIE WRAPS SHALL BE TENSIONED AND TRIMMED FLUSH.
6. ELEVATE ALL TERMINAL BLOCK DIN RAIL A MINIMUM OF 2 INCHES OFF OF BACK PANEL.
7. NO 480VAC CIRCUITS SHALL TERMINATE IN OR PASS THROUGH CONTROL CABINETS.
8. NO CAMERA OR TELEPHONE CABLES SHALL TERMINATE IN OR PASS THROUGH CONTROL CABINETS.
9. ALL CONDUIT PENETRATIONS SHALL BE LOCATED AT THE SIDE OR BOTTOM OF THE ENCLOSURE. NO TOP, FRONT, OR REAR PENETRATIONS ALLOWED.
10. QUANTITY OF COMPONENTS VARY AS REQUIRED FOR EACH CABINET.
11. REFER TO INSTRUMENTATION TYPICAL DETAILS FOR PANEL CONSTRUCTION AND WIRING REQUIREMENTS.
12. PROVIDE PANEL SURGE PROTECTION FOR ALL INSTRUMENT SIGNAL LINES LOCATED OUTDOORS OR OTHERWISE INDICATED IN THE DRAWING OR SPECIFICATIONS.
13. PROVIDE ADDITIONAL HARDWARE AND CONFIGURATION AS NEEDED FOR A FULLY FUNCTIONAL SYSTEM REARRANGE EXISTING COMPONENTS AS NEEDED TO ACCOMMODATE NEW COMPONENTS. RE-LIST EXISTING CONTROL PANEL UL LABEL AS REQUIRED.

KEY NOTES:

1. PROVIDE SCADA ETHERNET SWITCHES WITH A MINIMUM OF 2 FIBER OPTIC (FO) PORTS.
2. SALVAGE EXISTING MODICON M340 PLC TO THE OWNER. REPLACE WITH MODICON X80 REMOTE I/O MODULE. INSTALL NEW PLC INPUT AND OUTPUT MODULES, CONTROL RELAY, CIRCUIT BREAKER(S), FUSED TERMINAL BLOCK(S) AND TERMINAL BLOCKS AS REQUIRED. RELOCATE EXISTING COMPONENTS TO FACILITATE INSTALLATION OF NEW COMPONENTS. PROVIDE FIELD VERIFIED AS BUILT BILL OF MATERIALS, LAYOUT AND WIRING SCHEMATIC DRAWINGS. DOCUMENTING ALL CHANGES MADE.
3. SALVAGE EXISTING RADIO, CABLE AND ANTENNA (TO THE OWNER) AND REPLACE IT WITH NEW CELLULAR MODEM WITH FIREWALL SECURITY, OMNI ANTENNA AND CABLE.
4. AFTER REMOVING THE EXISTING RADIO, RELOCATE EXISTING DIN-RAIL MOUNTED COMPONENTS (AND ASSOCIATED WIRING, AS NEEDED) TO FACILITATE INSTALLATION OF THE FIBER PATCH PANEL.

MAJOR EQUIPMENT SCHEDULE

ITEM	DESCRIPTION
1	BACK PANEL
2	PLC BACKPLANE
3	MODICON X80 REMOTE I/O MODULE
4	PLC POWER SUPPLY
5	PLC DI MODULES
6	PLC AI MODULES
7	CELLULAR MODEM WITH FIREWALL SECURITY
8	DISCRETE TERMINAL BLOCKS
9	ANALOG TERMINAL BLOCKS
10	4-20 mA SIGNAL DUPLICATOR
11	ENCLOSURE TEMPERATURE SWITCH
12	CIRCUIT BREAKERS
13	120VAC PANEL SURGE PROTECTOR
14	24VDC POWER SUPPLY
15	REDUNDANCY MODULE
16	24VDC PANEL SURGE PROTECTOR
17	GRAY WIRE DUCT
18	WHITE WIRE DUCT
19	GROUND BAR
20	UPS MAINTENANCE BYPASS SWITCH
21	GFCI RECEPTACLE, 5A
22	SIGNAL DUPLICATOR
23	SCADA ETHERNET SWITCH
24	FIBER PATCH PANEL (BY OTHERS)

REV	DATE	BY	DESCRIPTION
			BID SET

DESIGNED RDG
DRAWN LR
CHECKED JM
DATE MAY 2026

COLORADO LICENSED
KELLEN CROSS
55107
Digitally signed by Kellen W Cross
Date: 2026.05.06 14:29:49 -06'00'
PROFESSIONAL ENGINEER

carollo

THORNTON WATER PROJECT

CITY OF THORNTON - THORNTON WATER PROJECT

CHEMICAL BUILDING AND PRV VAULTS

INSTRUMENTATION

LCC PRV - PANELS
PCM PANEL INTERNAL ELEVATION

VERIFY SCALES
BAR IS ONE INCH ON ORIGINAL DRAWING
0 1"
IF NOT ONE INCH ON THIS SHEET, ADJUST SCALES ACCORDINGLY

JOB NO. 204403
DRAWING NO. 30N03
SHEET NO. 59 OF 168

LAST SAVED BY: CRollins

PROJECT NO. 204403-100000 FILE NAME: 204403_30N03.dwg

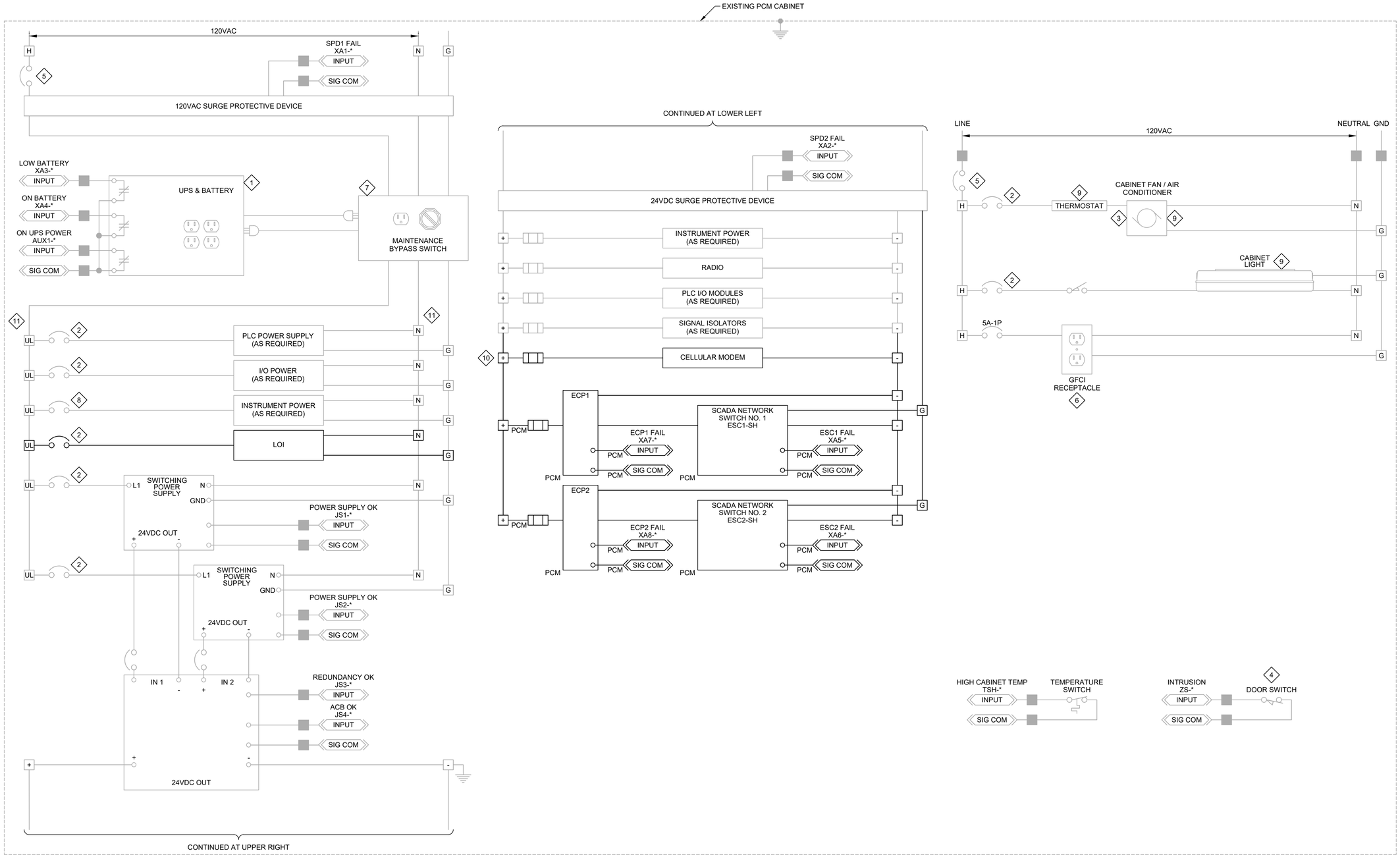

TAG ⟷ LOOP REFERENCE EXISTING DWG.
* = LCC ⟷ PCM-LCC 75N06

GENERAL NOTES:

1. SCHEMATIC ILLUSTRATES DESIGN INTENT ONLY. PROVIDE ALL NECESSARY COMPONENTS TO MEET PROJECT REQUIREMENTS.

KEY NOTES:

1. SIZE UPS AND BATTERY BASED ON UPS SPECIFICATION REQUIREMENTS.
2. SIZE BASED ON PROTECTION NEEDS.
3. VERIFY LOADS BASED ON TEMPERATURE CALCULATIONS. PROVIDE ADDITIONAL CIRCUIT IF REQUIRED.
4. INSTALL SWITCH ON OUTERMOST DOOR OF OVERLAPPING DOORS. PROVIDE ADDITIONAL SWITCHES, WIRED IN SERIES, FOR NON-OVERLAPPING DOORS.
5. SIZE BASED ON LOAD REQUIREMENT.
6. PROVIDE QUANTITY REQUIRED PER SPECIFICATIONS. SIZE RECEPTACLE FOR LAPTOP.
7. PROVIDE HARDWIRED CONNECTIONS OR RECEPTACLE/PLUG AS REQUIRED BY MAINTENANCE BYPASS SWITCH.
8. SIZE BASED ON PROTECTION NEEDS. PROVIDE SEPARATE CIRCUIT BREAKERS FOR EACH INSTRUMENT POWERED FROM THE PCM CABINET.
9. PROVIDE QUANTITY REQUIRED PER SPECIFICATIONS.
10. EXTEND EXISTING PANEL POWER CIRCUIT(S) TO NEW PLC INPUT AND OUTPUT CARDS AND NEW CONTROL RELAY AS REQUIRED. PROVIDE NEW CIRCUIT BREAKER(S) AND FUSED TERMINAL BLOCKS, SIZED BASED ON CONNECTED LOADS AND PROTECTION NEEDS, AS REQUIRED. CONFIRM AVAILABILITY AND EXISTING CONDITIONS PRIOR TO INITIAL SHOP DRAWING SUBMITTAL.

TERMINAL BLOCK LEGEND

■	PCM
H	120VAC
N	NEUTRAL
G	GROUND
UL	UPS 120VAC
+	24VDC (+)
-	24VDC (-)

1 CONTROL SCHEMATIC

REV	DATE	BY	DESCRIPTION
			BID SET

DESIGNED RDG
DRAWN LR
CHECKED JM
DATE MAY 2026

COLORADO LICENSED PROFESSIONAL ENGINEER 55107

carollo

THORNTON WATER PROJECT

CITY OF THORNTON - THORNTON WATER PROJECT
CHEMICAL BUILDING AND PRV VAULTS
INSTRUMENTATION
LCC PRV - PANELS
PCM PANEL POWER WIRING SCHEMATIC

VERIFY SCALES
BAR IS ONE INCH ON ORIGINAL DRAWING
0 1"
IF NOT ONE INCH ON THIS SHEET, ADJUST SCALES ACCORDINGLY

JOB NO. 204403
DRAWING NO. 30N04
SHEET NO. 60 OF 168

LAST SAVED BY: DCosme

PROJECT NO. 204403-100000 FILE NAME: 204403_30N04.dwg

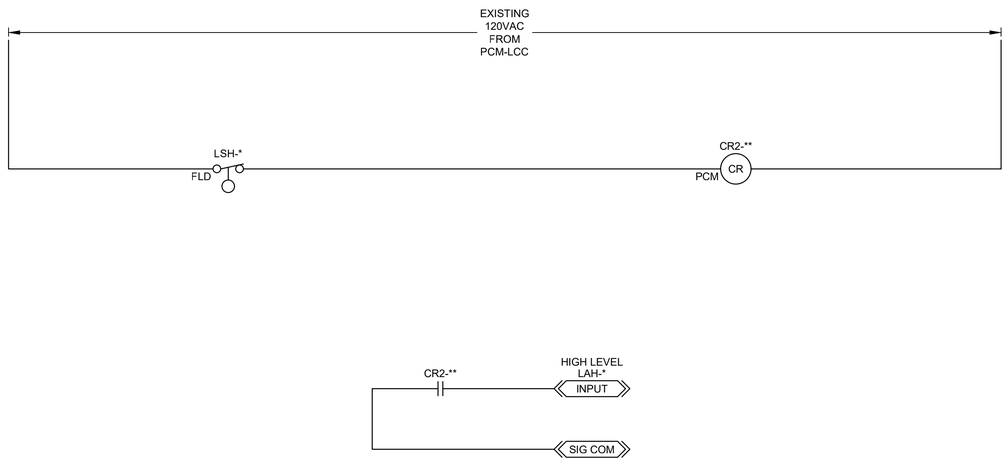

TAG ⟷ LOOP	REFERENCE DWG.	LOCATION LEGEND		
* = 301, ** = LCC ⟷ LSH-301	30N07	PCM	PCM OR DCS	
		FLD	FIELD DEVICE	

1 CONTROL SCHEMATIC

REV	DATE	BY	DESCRIPTION
			BID SET

DESIGNED RDG
DRAWN LR
CHECKED JM
DATE MAY 2026

COLORADO LICENSED PROFESSIONAL ENGINEER KELLEN GROSS 55107 Digitally signed by Kellen W Gross Date: 2026.05.08 14:30:02 -06'00'

carollo®

THORNTON WATER PROJECT

CITY OF THORNTON - THORNTON WATER PROJECT

CHEMICAL BUILDING AND PRV VAULTS

INSTRUMENTATION

LCC PRV - LEVEL SWITCH AND CONTROL RELAY WIRING DIAGRAM

VERIFY SCALES
BAR IS ONE INCH ON ORIGINAL DRAWING
0 1"
IF NOT ONE INCH ON THIS SHEET, ADJUST SCALES ACCORDINGLY

JOB NO. 204403
DRAWING NO. 30N05
SHEET NO. 61 OF 168

LAST SAVED BY: DCosme

PROJECT NO. 204403-100000 FILE NAME: 204403_30N05.dwg

KEY NOTES:

1. ESTIMATED SIZE, FINAL SIZE BY CONTRACTOR.

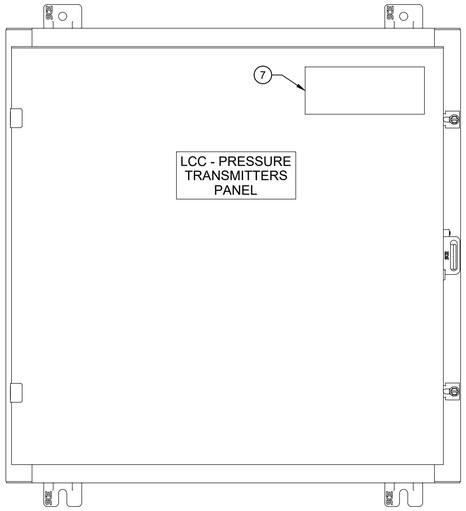

EXTERIOR

FRONT VIEW

SCALE: 3" = 1' - 0"

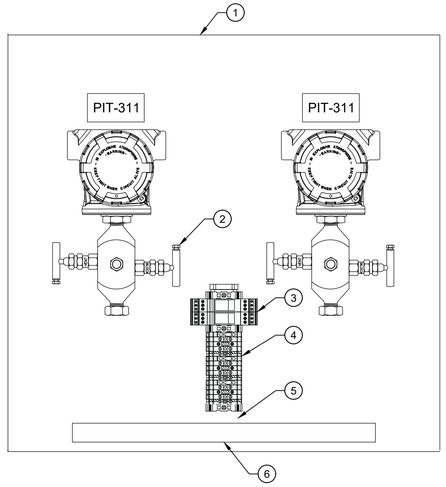

INTERIOR

FRONT VIEW

SCALE: 3" = 1' - 0"

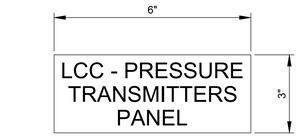

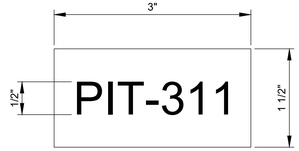

NAMEPLATE SCHEDULE
PIT-311
PIT-312

MAJOR EQUIPMENT SCHEDULE	
ITEM	DESCRIPTION
1	NEMA 4X SST, PADLOCKABLE ENCLOSURE AND BACK PANEL
2	PRESSURE INDICATING TRANSMITTER; TYP.
3	24VDC SURGE PROTECTOR (QUANTITY AS REQUIRED)
4	ANALOG TERMINAL BLOCKS (QUANTITY AS REQUIRED)
5	DIN RAIL (QUANTITY AS REQUIRED)
6	GROUND BAR
7	MANUFACTURER'S LABEL

REV	DATE	BY	DESCRIPTION
			BID SET

DESIGNED RG
DRAWN DBC
CHECKED JM
DATE MAY 2026

COLORADO LICENSED
KRISTEN GROAT
55107
PROFESSIONAL ENGINEER

CITY OF THORNTON - THORNTON WATER PROJECT

CHEMICAL BUILDING AND PRV VAULTS

INSTRUMENTATION

LCC PRV - PRESSURE TRANSMITTERS PANEL ELEVATIONS

VERIFY SCALES
BAR IS ONE INCH ON ORIGINAL DRAWING
0 1"
IF NOT ONE INCH ON THIS SHEET, ADJUST SCALES ACCORDINGLY

JOB NO. 204403
DRAWING NO. 30N06
SHEET NO. 62 OF 168

LAST SAVED BY: DCosme

PROJECT NO. 204403-100000 FILE NAME: 204403_30N06.dwg

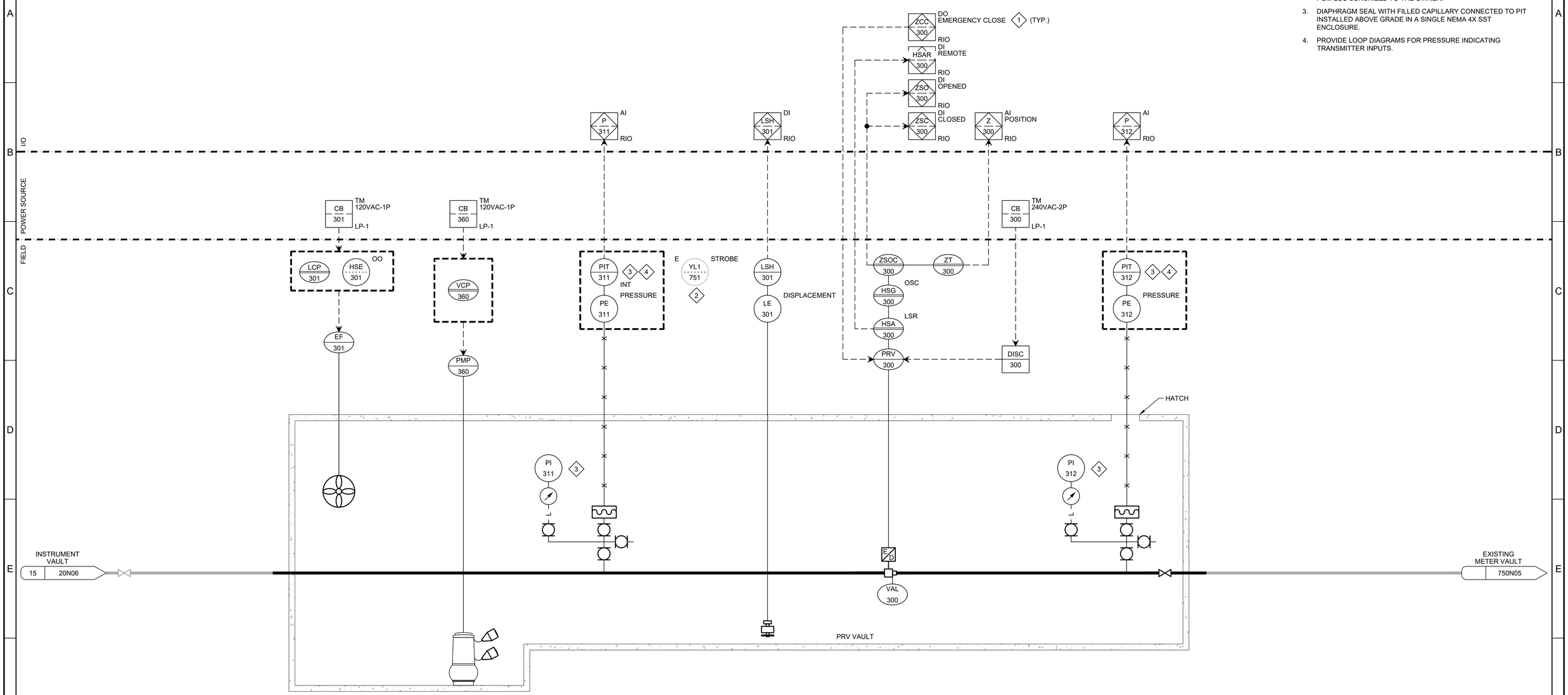

KEY NOTES:

1. PROVIDE NEW TERMINAL BLOCKS, FUSED TERMINAL BLOCKS, AND PLC INPUT/OUTPUT (I/O) MODULES (AS REQUIRED) INSIDE EXISTING PCM-LCC. USE EXISTING PANEL POWER AS REQUIRED.
2. SALVAGE EXISTING WARNING STROBE (YL1-751) ON TOP OF PCM-LCC SUNSHIELD TO THE OWNER.
3. DIAPHRAGM SEAL WITH FILLED CAPILLARY CONNECTED TO PIT INSTALLED ABOVE GRADE IN A SINGLE NEMA 4X SST ENCLOSURE.
4. PROVIDE LOOP DIAGRAMS FOR PRESSURE INDICATING TRANSMITTER INPUTS.

REV	DATE	BY	DESCRIPTION
			BID SET

DESIGNED RDG
DRAWN DKI
CHECKED JM
DATE MAY 2026

COLORADO LICENSED
KELLEN GROSS
55107
PROFESSIONAL ENGINEER

carollo®

THORNTON WATER PROJECT

CITY OF THORNTON - THORNTON WATER PROJECT

CHEMICAL BUILDING AND PRV VAULTS

INSTRUMENTATION

LCC PRV - P&ID
PRV VAULT

VERIFY SCALES
BAR IS ONE INCH ON ORIGINAL DRAWING
0 1"
IF NOT ONE INCH ON THIS SHEET, ADJUST SCALES ACCORDINGLY

JOB NO. 204403
DRAWING NO. 30N07
SHEET NO. 63 OF 168

LAST SAVED BY: CRollins

PROJECT NO. 204403-100000 FILE NAME: 204403_30N07.dwg

Plot Date: 5/4/2026 6:48:42 AM

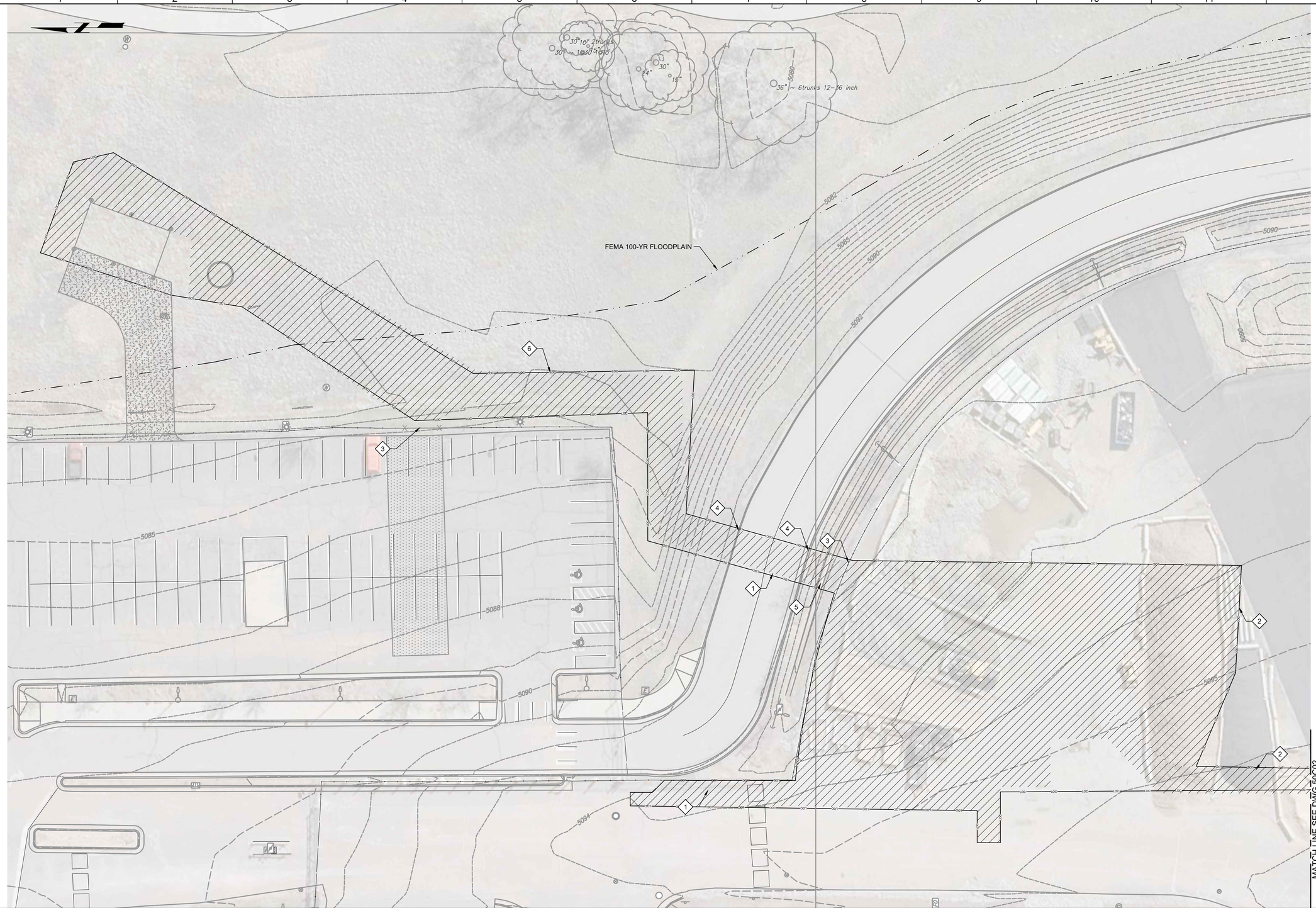

GENERAL NOTES:

1. BASIS OF SURVEY: NAD 1983/2011 AND NAVD88. SEE SURVEY CONTROL DIAGRAM FOR MORE DETAILED DESCRIPTION.

KEY NOTES:

1. REMOVE ASPHALT PAVEMENT.
2. REMOVE MATERIAL STOCK PILES, STORAGE CONTAINERS, EQUIPMENT, BLOCK WALLS, AND OTHER MATERIAL FOR CONSTRUCTION OF CHEMICAL BUILDING AND GRADING OPERATIONS. MOVE TO LOCATION DETERMINED BY OWNER.
3. REMOVE FENCE.
4. REMOVE CONCRETE CURB AND GUTTER.
5. REMOVE CONCRETE CHANNEL.
6. CLEAR AND GRUB EXISTING VEGETATION TO LIMITS SHOWN.

811 Know what's below. Call before you dig.

Call before you Overhead

KEY MAP

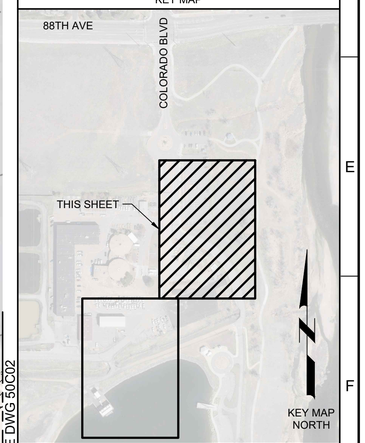

SCALE

0 10' 20' 40'

SCALE: 1" = 20' (HORIZ)

REV	DATE	BY	DESCRIPTION
			BID SET

DESIGNED CDH
DRAWN CDH
CHECKED JJK
DATE MAY 2026

COLORADO LICENSED COURTNEY D. THOMAS 55165 Digitally signed by Courtney D. Thomas Date: 2026.05.04 06:55:50 -06'00' PROFESSIONAL ENGINEER

carollo

THORNTON WATER PROJECT

CITY OF THORNTON - THORNTON WATER PROJECT

CHEMICAL BUILDING AND PRV VAULTS

CIVIL

CHEMICAL BUILDING - GRADING, PAVING & DRAINAGE DEMOLITION PLAN 1

VERIFY SCALES
BAR IS ONE INCH ON ORIGINAL DRAWING
0 1"
IF NOT ONE INCH ON THIS SHEET, ADJUST SCALES ACCORDINGLY

JOB NO. 204403
DRAWING NO. 50C01
SHEET NO. 64 OF 168

LAST SAVED BY: Chusted

PROJECT NO. 204403-100000 FILE NAME: 204403_50C01.dwg

Plot Date: 5/4/2026 6:50:06 AM

MATCH LINE SEE DWG 50C01

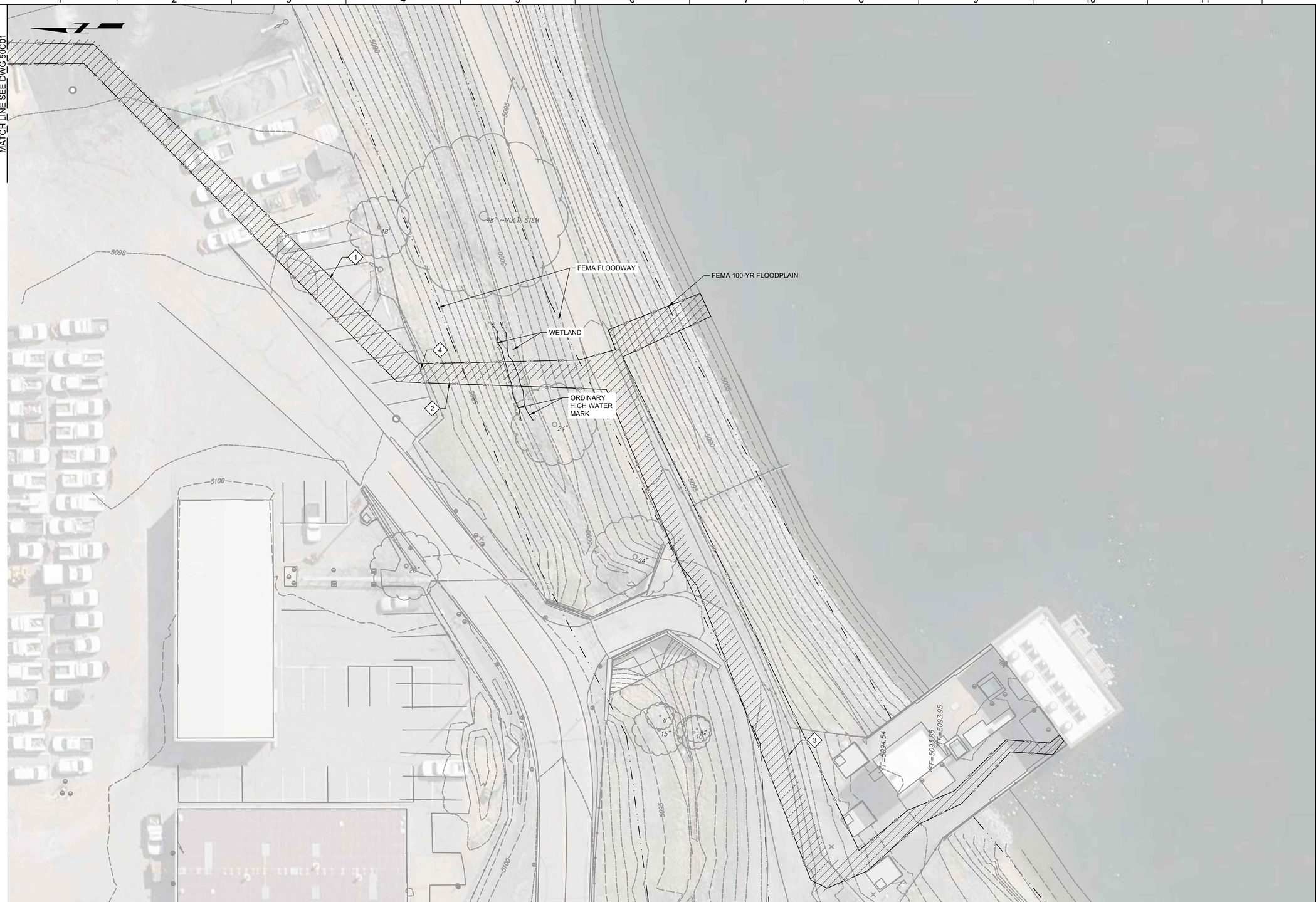

GENERAL NOTES:

1. BASIS OF SURVEY: NAD 1983/2011 AND NAVD88. SEE SURVEY CONTROL DIAGRAM FOR MORE DETAILED DESCRIPTION.

KEY NOTES:

1. REMOVE ASPHALT PAVEMENT.
2. CLEAR AND GRUB EXISTING VEGETATION TO LIMITS SHOWN
3. REMOVE GRAVEL ROAD BASE.
4. REMOVE FENCE.

811 Know what's below. Call before you dig.

Call before you Overhead

KEY MAP

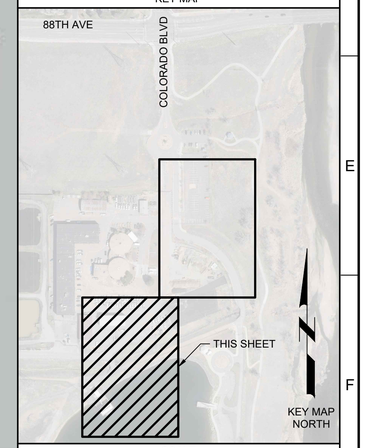

SCALE

0 10' 20' 40'

SCALE: 1" = 20' (HORIZ)

REV	DATE	BY	DESCRIPTION
			BID SET

DESIGNED CDH
DRAWN CDH
CHECKED JJK
DATE MAY 2026

COLORADO LICENSED 55165 PROFESSIONAL ENGINEER

carollo

THORNTON WATER PROJECT

CITY OF THORNTON - THORNTON WATER PROJECT

CHEMICAL BUILDING AND PRV VAULTS

CIVIL

CHEMICAL BUILDING - GRADING, PAVING & DRAINAGE DEMOLITION PLAN 2

VERIFY SCALES
BAR IS ONE INCH ON ORIGINAL DRAWING
0 1"
IF NOT ONE INCH ON THIS SHEET, ADJUST SCALES ACCORDINGLY

JOB NO. 204403
DRAWING NO. 50C02
SHEET NO. 65 OF 168

LAST SAVED BY: CHusted

PROJECT NO. 204403-100000 FILE NAME: 204403_50C02.dwg

Plot Date: 5/6/2026 12:24:34 PM

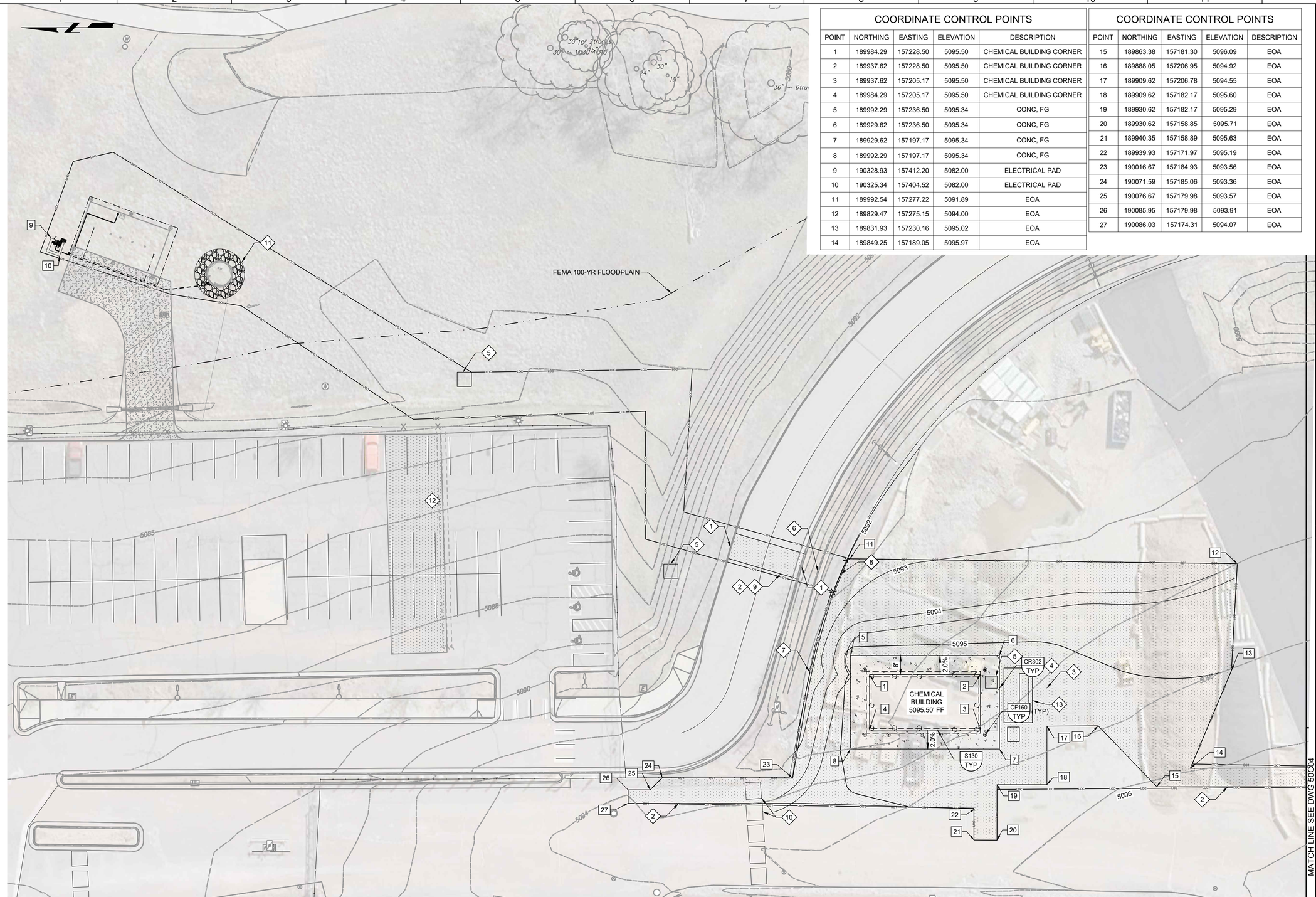

COORDINATE CONTROL POINTS

POINT	NORTHING	EASTING	ELEVATION	DESCRIPTION
1	189984.29	157228.50	5095.50	CHEMICAL BUILDING CORNER
2	189937.62	157228.50	5095.50	CHEMICAL BUILDING CORNER
3	189937.62	157205.17	5095.50	CHEMICAL BUILDING CORNER
4	189984.29	157205.17	5095.50	CHEMICAL BUILDING CORNER
5	189992.29	157236.50	5095.34	CONC, FG
6	189929.62	157236.50	5095.34	CONC, FG
7	189929.62	157197.17	5095.34	CONC, FG
8	189992.29	157197.17	5095.34	CONC, FG
9	190328.93	157412.20	5082.00	ELECTRICAL PAD
10	190325.34	157404.52	5082.00	ELECTRICAL PAD
11	189992.54	157277.22	5091.89	EOA
12	189829.47	157275.15	5094.00	EOA
13	189831.93	157230.16	5095.02	EOA
14	189849.25	157189.05	5095.97	EOA

COORDINATE CONTROL POINTS

POINT	NORTHING	EASTING	ELEVATION	DESCRIPTION
15	189863.38	157181.30	5096.09	EOA
16	189888.05	157206.95	5094.92	EOA
17	189909.62	157206.78	5094.55	EOA
18	189909.62	157182.17	5095.60	EOA
19	189930.62	157182.17	5095.29	EOA
20	189930.62	157158.85	5095.71	EOA
21	189940.35	157158.89	5095.63	EOA
22	189939.93	157171.97	5095.19	EOA
23	190016.67	157184.93	5093.56	EOA
24	190071.59	157185.06	5093.36	EOA
25	190076.67	157179.98	5093.57	EOA
26	190085.95	157179.98	5093.91	EOA
27	190086.03	157174.31	5094.07	EOA

GENERAL NOTES:

1. BASIS OF SURVEY: NAD 1983/2011 AND NAVD88. SEE SURVEY CONTROL DIAGRAM FOR MORE DETAILED DESCRIPTION.
2. ALL WORK WITHIN THE LIMITS OF THE 100-YR FLOODPLAIN OR FLOODWAY SHALL RETURN FINISHED GRADE TO MATCH EXISTING GRADE BEFORE CONSTRUCTION.

KEY NOTES:

1. INSTALL CURB AND GUTTER TO MATCH EXISTING CONDITION, INSTALL TO EXISTING LINE AND GRADE.
2. INSTALL ASPHALT PAVING TO MATCH EXISTING SECTION + 1", INSTALL TO EXISTING LINE AND GRADE.
3. 4" ASPHALT PAVEMENT OVER 8" OF CLASS 6 BASE COURSE.
4. 8' WIDE CONCRETE APRON.
5. ELECTRICAL HANDHOLE, SEE ELECTRICAL PLANS.
6. INSTALL 6" THICK CONCRETE CHANNEL TO EXISTING LINE AND GRADE.
7. INSTALL 2' ASPHALT CURB CUT, OUTLET ROOF DRAIN TO CONCRETE CHANNEL.
8. INSTALL 6" CHAIN LINK FENCE.
9. RESTORE EXISTING PAVEMENT MARKINGS.
10. INSTALL TYPE 1 SPEED CUSHION AND PAVEMENT MARKINGS PER CITY OF THORNTON DETAILS AND DRAWING NO. 500-21.
11. INSTALL AGGREGATE BASE COURSE (ABC) FOR 10-FOOT RADIUS AROUND EXISTING CHEMICAL INJECTION MANHOLE. OVEREXCAVATE BEFORE PLACEMENT OF ABC SO THAT FINISHED GRADE MATCHES EXISTING GRADE.
12. PARKING LOT CAN BE USED TO STOCKPILE MATERIAL.
13. GENERATOR PAD. SEE STRUCTURAL FOR DETAILS.

Know what's below. Call before you dig.

Call before you Overhead

KEY MAP

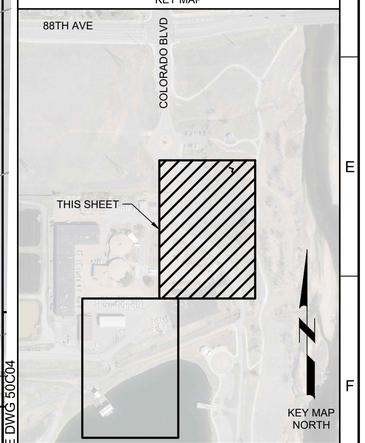

SCALE

0 10' 20' 40'

SCALE: 1" = 20' (HORIZ)

REV	DATE	BY	DESCRIPTION
			BID SET

DESIGNED CDH
DRAWN CDH
CHECKED JJK
DATE MAY 2026

COLORADO LICENSED COURTNEY D. THORSEN 55165 Digitally signed by Courtney D. Thorsen Date: 2026.05.06 15:37:15-06'00' PROFESSIONAL ENGINEER

carollo

THORNTON WATER PROJECT

CITY OF THORNTON - THORNTON WATER PROJECT

CHEMICAL BUILDING AND PRV VAULTS

CIVIL

CHEMICAL BUILDING - GRADING, PAVING, AND DRAINAGE PLAN 1

VERIFY SCALES
BAR IS ONE INCH ON ORIGINAL DRAWING
0 1"
IF NOT ONE INCH ON THIS SHEET, ADJUST SCALES ACCORDINGLY

JOB NO. 204403
DRAWING NO. 50C03
SHEET NO. 66 OF 168

LAST SAVED BY: Chusted

PROJECT NO. 200417-100000 FILE NAME: 204403_50C03.dwg

Plot Date: 5/4/2026 6:55:00 AM

MATCH LINE SEE DWG 50C03

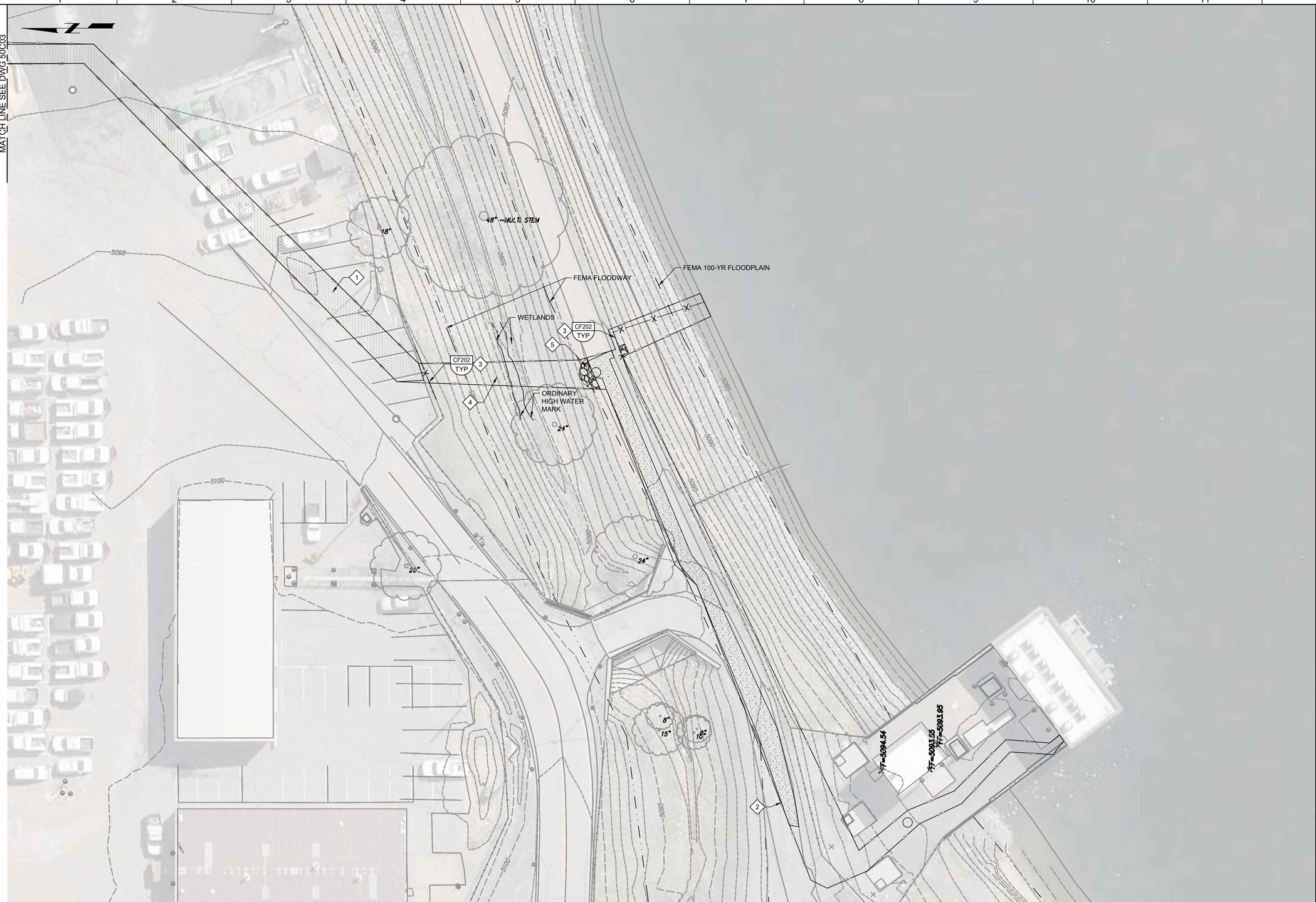

GENERAL NOTES:

1. BASIS OF SURVEY: NAD 1983/2011 AND NAVD88. SEE SURVEY CONTROL DIAGRAM FOR MORE DETAILED DESCRIPTION.
2. ALL WORK WITHIN THE LIMITS OF THE 100-YR FLOODPLAIN OR FLOODWAY SHALL RETURN FINISHED GRADE TO MATCH EXISTING GRADE BEFORE CONSTRUCTION.

X KEY NOTES:

1. INSTALL ASPHALT PAVING TO MATCH EXISTING CONDITION, INSTALL TO EXISTING LINE AND GRADE.
2. INSTALL RECYCLED ASPHALT ROAD.
3. INSTALL 6' CHAIN LINK FENCE.
4. FINAL GRADE TO BE RETURNED TO EXISTING GRADE.
5. INSTALL AGGREGATE BASE COURSE (ABC) FOR 10-FOOT RADIUS AROUND LEAK DETECTION MANHOLE WITHIN EXISTING VEGETATION AREA. OVEREXCAVATE BEFORE PLACEMENT OF ABC SO THAT FINISHED GRADE MATCHES EXISTING GRADE.

811 Know what's below. Call before you dig.

Call before you Overhead

KEY MAP

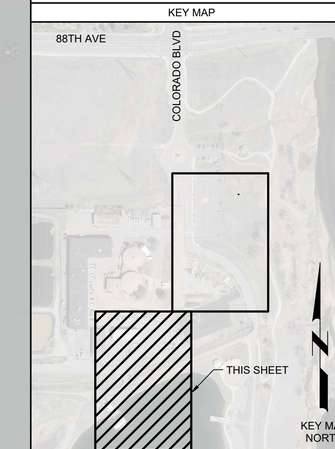

SCALE

0 10' 20' 40'

SCALE: 1" = 20' (HORIZ)

REV	DATE	BY	DESCRIPTION
			BID SET

DESIGNED CDH
DRAWN CDH
CHECKED JJK
DATE MAY 2026

COLORADO LICENSED PROFESSIONAL ENGINEER 55165 Digitally signed by Courtney D. Husted Date: 2026.05.04 15:37:56-06'00'

carollo

THORNTON WATER PROJECT

CITY OF THORNTON - THORNTON WATER PROJECT

CHEMICAL BUILDING AND PRV VAULTS

CIVIL

CHEMICAL BUILDING - GRADING, PAVING, AND DRAINAGE PLAN 2

VERIFY SCALES
BAR IS ONE INCH ON ORIGINAL DRAWING
0 1"
IF NOT ONE INCH ON THIS SHEET, ADJUST SCALES ACCORDINGLY

JOB NO. 204403
DRAWING NO. 50C04
SHEET NO. 67 OF 168

LAST SAVED BY: CHusted

PROJECT NO. 200417-100000 FILE NAME: 204403_50C04.dwg

Plot Date: 5/4/2026 6:56:29 AM

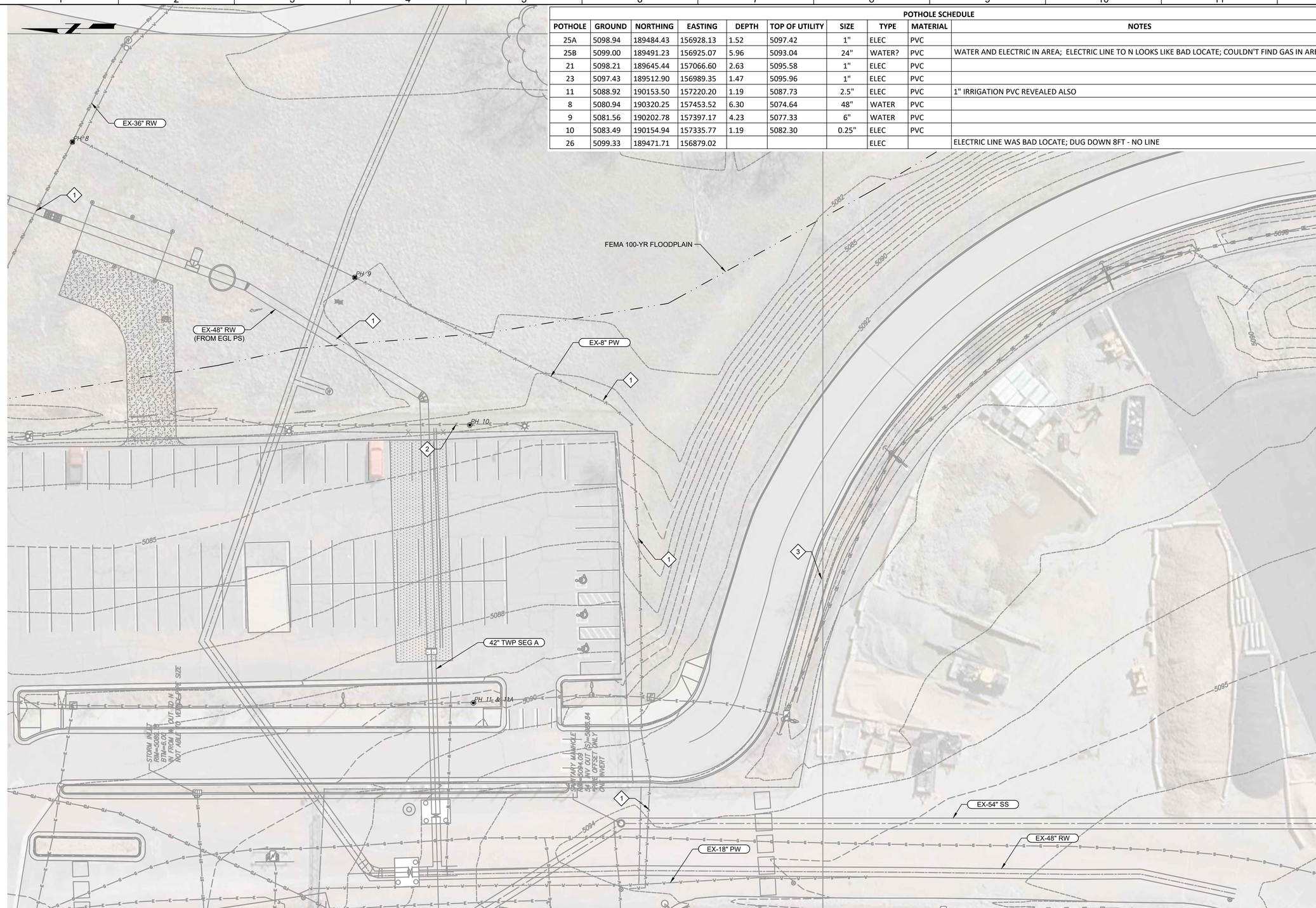

POTHOLE SCHEDULE									
POTHOLE	GROUND	NORTHING	EASTING	DEPTH	TOP OF UTILITY	SIZE	TYPE	MATERIAL	NOTES
25A	5098.94	189484.43	156928.13	1.52	5097.42	1"	ELEC	PVC	
25B	5099.00	189491.23	156925.07	5.96	5093.04	24"	WATER?	PVC	WATER AND ELECTRIC IN AREA; ELECTRIC LINE TO N LOOKS LIKE BAD LOCATE; COULDN'T FIND GAS IN AREA
21	5098.21	189645.44	157066.60	2.63	5095.58	1"	ELEC	PVC	
23	5097.43	189512.90	156989.35	1.47	5095.96	1"	ELEC	PVC	
11	5088.92	190153.50	157220.20	1.19	5087.73	2.5"	ELEC	PVC	1" IRRIGATION PVC REVEALED ALSO
8	5080.94	190320.25	157453.52	6.30	5074.64	48"	WATER	PVC	
9	5081.56	190202.78	157397.17	4.23	5077.33	6"	WATER	PVC	
10	5083.49	190154.94	157335.77	1.19	5082.30	0.25"	ELEC	PVC	
26	5099.33	189471.71	156879.02				ELEC		ELECTRIC LINE WAS BAD LOCATE; DUG DOWN 8FT - NO LINE

GENERAL NOTES:

1. BASIS OF SURVEY: NAD 1983/2011 AND NAVD88. SEE SURVEY CONTROL DIAGRAM FOR MORE DETAILED DESCRIPTION.

X KEY NOTES:

1. PROTECT EXISTING WATER LINE IN PLACE.
2. PROTECT EXISTING ELECTRICAL CONDUIT IN PLACE.
3. PROTECT IN PLACE IRRIGATION LINE.

811 Know what's below. Call before you dig.

Call before you Overhead

KEY MAP

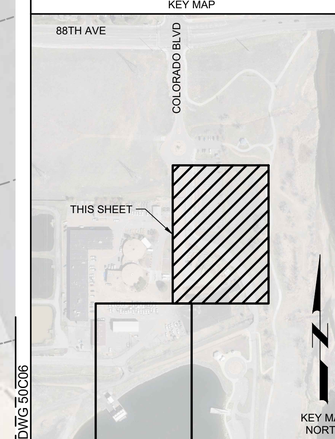

SCALE

0 10' 20' 40'

SCALE: 1" = 20' (HORIZ)

REV	DATE	BY	DESCRIPTION
			BID SET

DESIGNED CDH
DRAWN CDH
CHECKED JJK
DATE MAY 2026

COLORADO LICENSED PROFESSIONAL ENGINEER 55165

carollo

THORNTON WATER PROJECT

CITY OF THORNTON - THORNTON WATER PROJECT

CHEMICAL BUILDING AND PRV VAULTS

CIVIL

CHEMICAL BUILDING - YARD PIPING DEMOLITION PLAN 1

VERIFY SCALES
BAR IS ONE INCH ON ORIGINAL DRAWING
0 1"
IF NOT ONE INCH ON THIS SHEET, ADJUST SCALES ACCORDINGLY

JOB NO. 204403
DRAWING NO. 50C05
SHEET NO. 68 OF 168

LAST SAVED BY: CHusted

PROJECT NO. 204403-100000 FILE NAME: 204403_50C05.dwg

Plot Date: 5/4/2026 6:57:56 AM

MATCH LINE SEE DWG 50C05

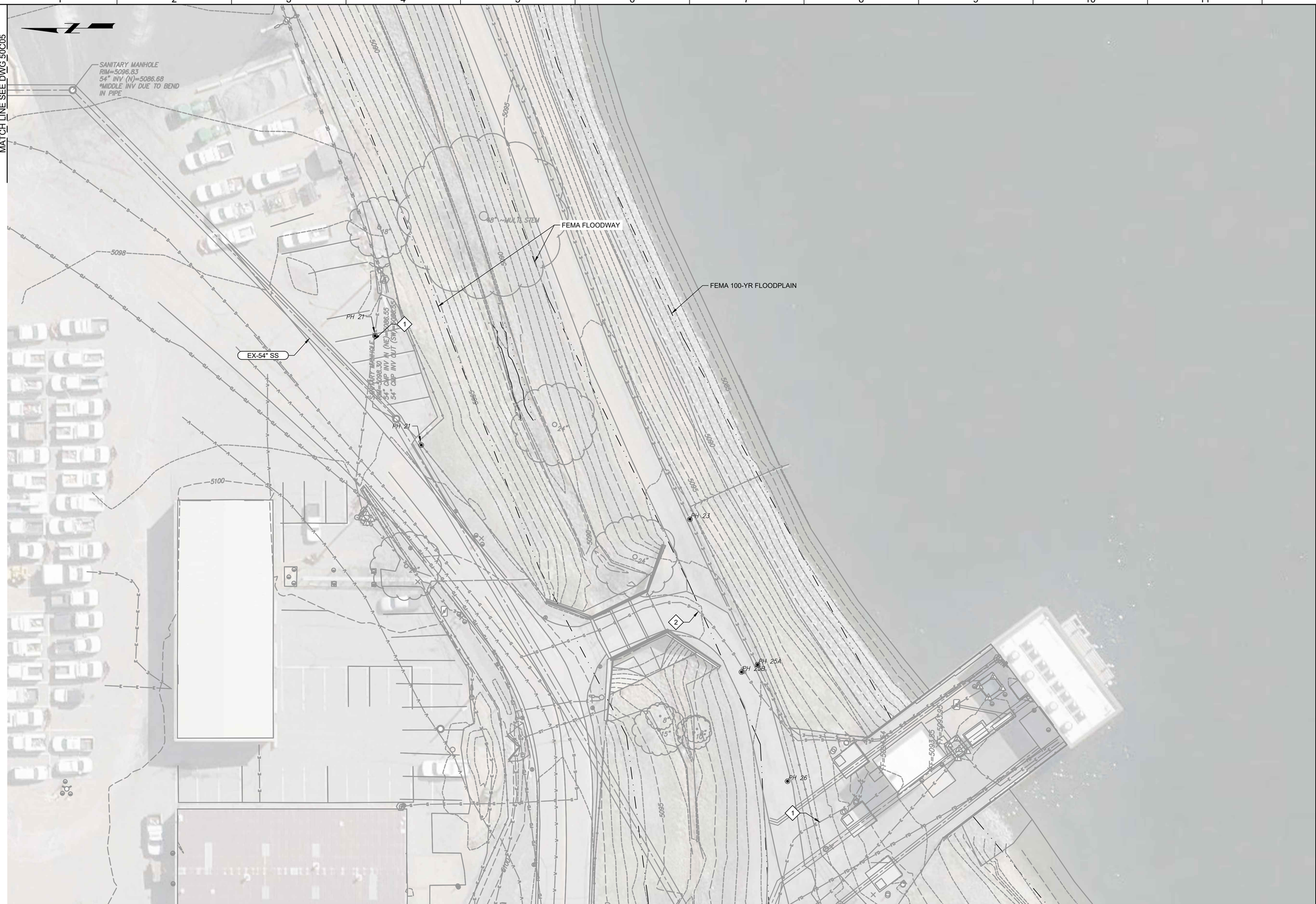

GENERAL NOTES:

1. BASIS OF SURVEY: NAD 1983/2011 AND NAVD88. SEE SURVEY CONTROL DIAGRAM FOR MORE DETAILED DESCRIPTION.

KEY NOTES:

1. PROTECT EXISTING ELECTRICAL CONDUIT IN PLACE.
2. PROTECT EXISTING GAS LINE IN PLACE.

811 Know what's below. Call before you dig.

Call before you Overhead

KEY MAP

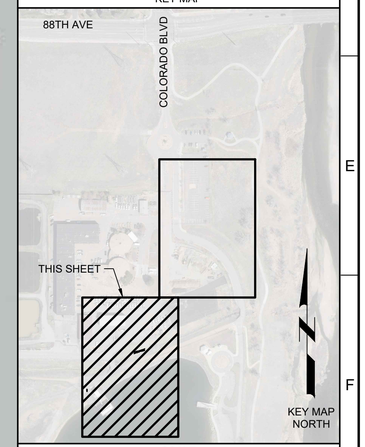

SCALE

0 10' 20' 40'

SCALE: 1" = 20' (HORIZ)

LAST SAVED BY: CHusted

REV	DATE	BY	DESCRIPTION
			BID SET

DESIGNED CDH
DRAWN CDH
CHECKED JJK
DATE MAY 2026

COLORADO LICENSED
CHRISTOPHER D. HUSTED
55165
PROFESSIONAL ENGINEER

carollo

THORNTON WATER PROJECT

CITY OF THORNTON - THORNTON WATER PROJECT

CHEMICAL BUILDING AND PRV VAULTS

CIVIL

CHEMICAL BUILDING - YARD PIPING DEMOLITION PLAN 2

VERIFY SCALES
BAR IS ONE INCH ON ORIGINAL DRAWING
0 1"
IF NOT ONE INCH ON THIS SHEET, ADJUST SCALES ACCORDINGLY

JOB NO. 204403
DRAWING NO. 50C06
SHEET NO. 69 OF 168

PROJECT NO. 204403-100000 FILE NAME: 204403_50C06.dwg

Plot Date: 5/6/2026 12:30:06 PM

COORDINATE CONTROL POINTS				
POINT	NORTHING	EASTING	ELEVATION	DESCRIPTION
1	190283.57	157422.87	5077.38	PIPE BANK C/L
2	190279.34	157421.34	5077.51	PIPE BANK C/L
3	190169.44	157334.44	5079.57	PIPE BANK C/L
4	190248.95	157400.58	5077.66	PIPE BANK C/L
5	190159.01	157347.29	5078.00	PIPE BANK C/L
7	190073.39	157344.50	5078.11	PIPE BANK C/L
8	189957.62	157237.50	5088.50	PIPE BANK C/L
9	189912.60	157237.50	5088.90	PIPE BANK C/L

COORDINATE CONTROL POINTS				
POINT	NORTHING	EASTING	ELEVATION	DESCRIPTION
10	189912.60	157215.84	5089.40	PIPE BANK C/L
11	189891.38	157215.83	5090.07	PIPE BANK C/L
12	189861.85	157186.30	5091.49	PIPE BANK C/L
13	190169.74	157344.51	5079.40	PIPE BANK C/L
14	190074.10	157289.93	5080.84	PIPE BANK C/L
15	189997.79	157267.40	5087.84	PIPE BANK C/L
16	189997.79	157211.34	5088.52	PIPE BANK C/L
18	190083.89	157177.14	5089.89	8" PW CONNECTION

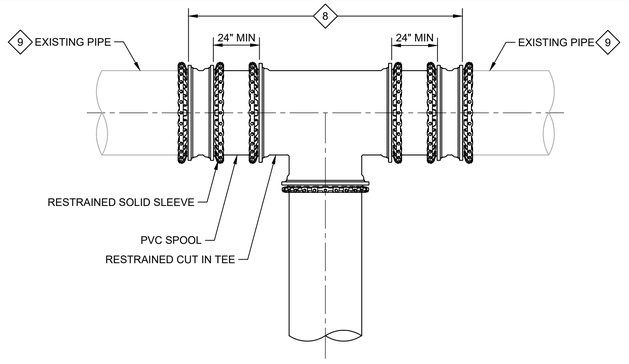

CUT IN TEE CONNECTION

1 DETAIL

SCALE: NO SCALE
FILE: NA

GENERAL NOTES:

1. BASIS OF SURVEY: NAD 1983/2011 AND NAVD88. SEE SURVEY CONTROL DIAGRAM FOR MORE DETAILED DESCRIPTION.
2. SEE ELECTRICAL PLANS FOR DUCT BANK, HAND HOLE, AND MANHOLE DETAILS.
3. UNLESS OTHERWISE SPECIFIED, ELEVATIONS ON THIS PLAN INDICATE PIPE INVERT ELEVATIONS.
4. NOTIFY METRO 48 HOURS PRIOR TO CONSTRUCTION OCCURRING IN METRO WATER RECOVERY (MWR) EASEMENT AT 720-520-1516 OR KBOCK@METROWATERRECOVERY.COM
5. NOTIFY AND INVITE METRO TO THE PRE-CONSTRUCTION MEETING AT 720-520-1516 OR KBOCK@METROWATERRECOVERY.COM+
6. ALL WORK WITHIN THE LIMITS OF THE 100-YR FLOODPLAIN OR FLOODWAY SHALL RETURN FINISHED GRADE TO MATCH EXISTING GRADE BEFORE CONSTRUCTION.

X KEY NOTES:

1. CONNECT 8" WATER SERVICE FOR CHEMICAL BUILDING TO EXISTING POTABLE WATER LINE, SHUTDOWN WATER MAIN TO INSTALL NEW CONNECTIONS. INSTALL ELECTRICAL ISOLATION AS NEEDED BETWEEN EXISTING AND NEW METALLIC PIPING (SEE CATHODIC PLANS).
2. CONNECT SAMPLE LINES TO EXISTING SAMPLE LINES.
3. MAKE CONNECTION TO 42" STEEL SEGMENT A PIPELINE, CONSTRUCTED BY OTHERS.
4. SEE SHEET 50C09 FOR PIPE CONNECTIONS IN EXISTING VAULT AND MANHOLE.
5. MAINTAIN ONE LANE OF TRAFFIC AT ALL TIMES.
6. 4", 6", AND 8" DUCTILE WATERLINES MUST CONTAIN CONTINUITY BONDING, ISOLATION DEVICES, AND ANODE TEST STATIONS. SEE CATHODIC PROTECTION SHEETS FOR MORE DETAILS.
7. PROTECT EXISTING CP TEST STATIONS AND ANODES. REPLACE ANY DAMAGED COMPONENTS PER TWP WORK PACKAGE A DRAWINGS.
8. LIMITS OF EXISTING PIPE DEMOLITION ARE DEPENDENT ON RESTRAINED COUPLING MANUFACTURER. COORDINATE REQUIRED STAB LENGTH WITH COUPLING MANUFACTURER PRIOR TO PIPE DEMOLITION. COUPLING SHALL HAVE AN APPROVED SUBMITTAL PRIOR TO DEMOLITION.
9. POTHOLE TO VERIFY EXISTING PIPE MATERIAL AND SIZE PRIOR TO ORDERING AND COORDINATE WITH ENGINEER ON COUPLING TO VERIFY PIPE COMPATIBILITY.
10. GAS LINE TO BE MINIMUM 2-FEET ABOVE METRO SEWER LINE. CONCRETE ENCASE GAS LINE WHERE LESS THAN 2-FOOT OF BURY DEPTH CAN BE ACHIEVED.

811 Know what's below. Call before you dig.

Call before you Overhead

KEY MAP

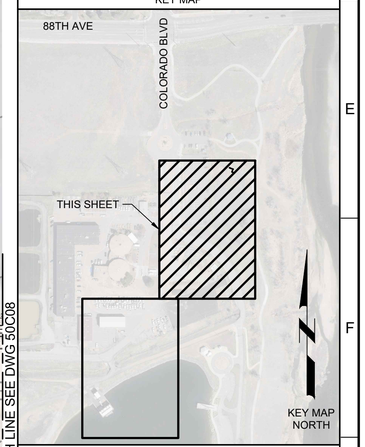

SCALE

0 10' 20' 40'

SCALE: 1" = 20' (HORIZ)

MATCH LINE SEE DWG 50C08

REV	DATE	BY	DESCRIPTION
			BID SET

DESIGNED CDH
DRAWN CDH
CHECKED JJK
DATE MAY 2026

COLORADO LICENSED COURTNEY D. HUNSELL 55165 Digitally signed by Courtney D. Hunsell Date: 2026.05.06 12:39:18-06'00' PROFESSIONAL ENGINEER

carollo

THORNTON WATER PROJECT

CITY OF THORNTON - THORNTON WATER PROJECT

CHEMICAL BUILDING AND PRV VAULTS

CIVIL

CHEMICAL BUILDING - YARD PIPING PLAN 1

VERIFY SCALES
BAR IS ONE INCH ON ORIGINAL DRAWING
0 1"
IF NOT ONE INCH ON THIS SHEET, ADJUST SCALES ACCORDINGLY

JOB NO. 204403
DRAWING NO. 50C07
SHEET NO. 70 OF 168

LAST SAVED BY: CHusted

PROJECT NO. 200417-100000 FILE NAME: 204403_50C07.dwg

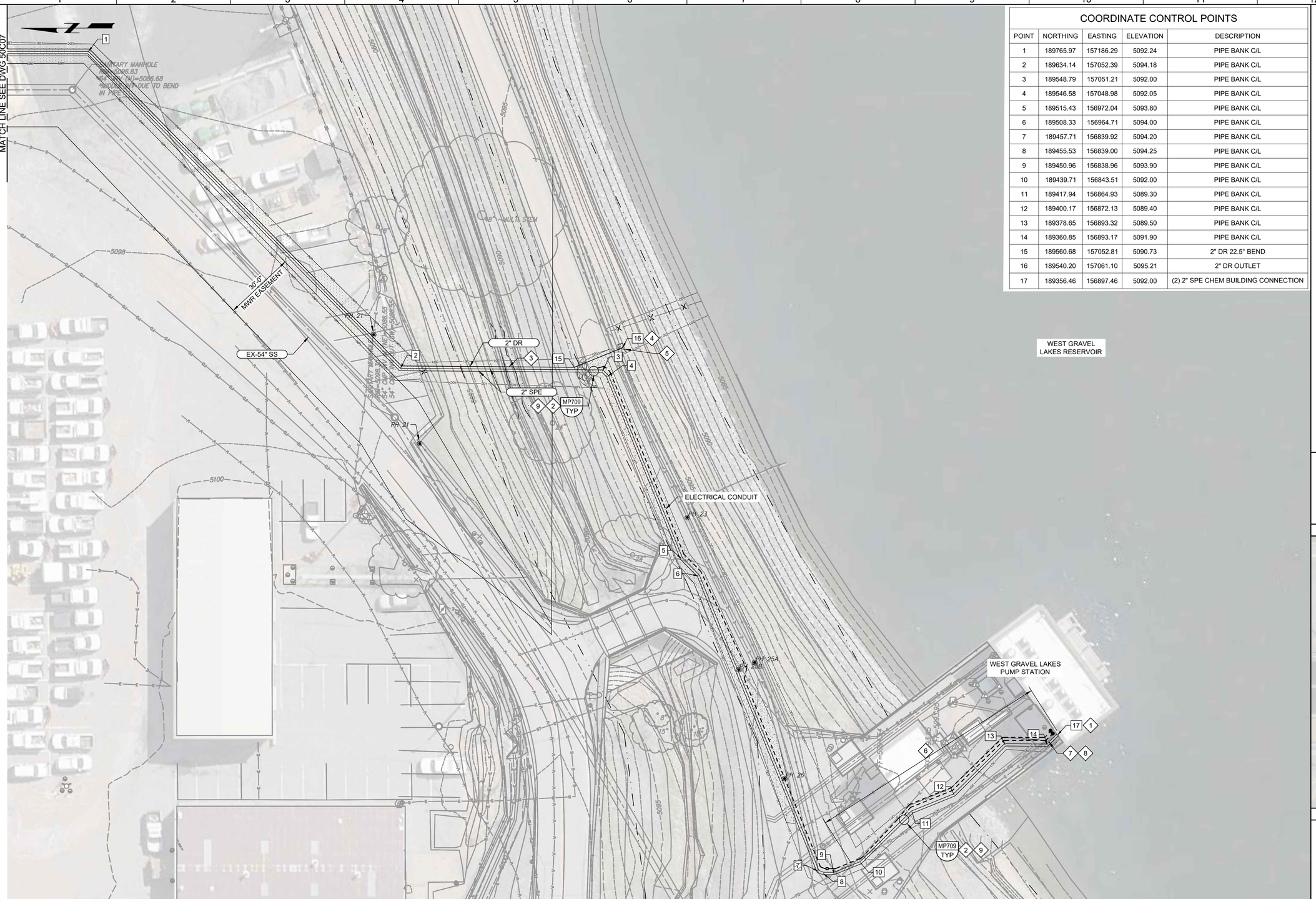

COORDINATE CONTROL POINTS

POINT	NORTHING	EASTING	ELEVATION	DESCRIPTION
1	189765.97	157186.29	5092.24	PIPE BANK C/L
2	189634.14	157052.39	5094.18	PIPE BANK C/L
3	189548.79	157051.21	5092.00	PIPE BANK C/L
4	189546.58	157048.98	5092.05	PIPE BANK C/L
5	189515.43	156972.04	5093.80	PIPE BANK C/L
6	189508.33	156964.71	5094.00	PIPE BANK C/L
7	189457.71	156839.92	5094.20	PIPE BANK C/L
8	189455.53	156839.00	5094.25	PIPE BANK C/L
9	189450.96	156838.96	5093.90	PIPE BANK C/L
10	189439.71	156843.51	5092.00	PIPE BANK C/L
11	189417.94	156864.93	5089.30	PIPE BANK C/L
12	189400.17	156872.13	5089.40	PIPE BANK C/L
13	189378.65	156893.32	5089.50	PIPE BANK C/L
14	189360.85	156893.17	5091.90	PIPE BANK C/L
15	189560.68	157052.81	5090.73	2" DR 22.5° BEND
16	189540.20	157061.10	5095.21	2" DR OUTLET
17	189356.46	156897.46	5092.00	(2) 2" SPE CHEM BUILDING CONNECTION

GENERAL NOTES:

1. BASIS OF SURVEY: NAD 1983/2011 AND NAVD88. SEE SURVEY CONTROL DIAGRAM FOR MORE DETAILED DESCRIPTION.
2. SEE ELECTRICAL PLANS FOR DUCT BANK, HAND HOLE, AND MANHOLE DETAILS.
3. UNLESS OTHERWISE SPECIFIED, ELEVATIONS ON THIS PLAN INDICATE PIPE INVERT ELEVATIONS.
4. ALL WORK WITHIN THE LIMITS OF THE 100-YR FLOODPLAIN OR FLOODWAY SHALL RETURN FINISHED GRADE TO MATCH EXISTING GRADE BEFORE CONSTRUCTION.

KEY NOTES:

1. SEE MECHANICAL SHEETS FOR CONTINUATION.
2. INSTALL LEAK DETECTION MANHOLE.
3. OPEN CUT DITCH INSTALLATION OF PIPES.
4. OUTLET 2" SUMP PUMP DRAIN LINE TO WEST GRAVEL LAKES RESERVOIR. EXTEND PIPE 2' FROM EDGE OF RIP RAP. INSTALL DUCKBILL CHECK VALVE ON END OF PIPE.
5. RESTORE RIP-RAP AFTER INSTALLATION OF 2" DR.
6. PROVIDE SLOT TRENCHING BY VACUUM EXCAVATION METHODS FOR INSTALLATION OF TWO 2" SPE PIPES IN THIS AREA. TRENCH BEDDING AND BACKFILL SHALL BE CLSM IN THIS AREA. PROTECT EXISTING UTILITIES IN PLACE.
7. PROTECT EXISTING FIBER OPTIC CABLE IN THIS LOCATION. COORDINATE 2" SPE PIPE ALIGNMENT TO AVOID FIBER OPTIC CABLE.
8. PROVIDE HEAT TRACE ON EXTERIOR 2" SPE PIPES FROM ENTRY INTO BUILDING TO WHERE PIPING HAS A MINIMUM OF 4 FEET OF COVER.
9. PROVIDE RAVEN 405, OR APPROVED EQUAL, WITH A DFT OF 125 MILS FOR LINING OF THE SODIUM PERMANGANATE LEAK DETECTION MANHOLES.

Know what's below. Call before you dig.

Call before you Overhead

KEY MAP

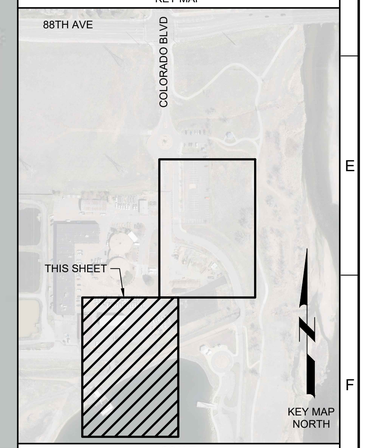

SCALE

0 10' 20' 40'

SCALE: 1" = 20' (HORIZ)

REV	DATE	BY	DESCRIPTION
			BID SET

DESIGNED CDH
DRAWN CDH
CHECKED JJK
DATE MAY 2026

COLORADO LICENSED
55165
PROFESSIONAL ENGINEER

carollo

THORNTON WATER PROJECT

CITY OF THORNTON - THORNTON WATER PROJECT

CHEMICAL BUILDING AND PRV VAULTS

CIVIL

CHEMICAL BUILDING - YARD PIPING PLAN 2

VERIFY SCALES
BAR IS ONE INCH ON ORIGINAL DRAWING
0 1"
IF NOT ONE INCH ON THIS SHEET, ADJUST SCALES ACCORDINGLY

JOB NO. 204403
DRAWING NO. 50C08
SHEET NO. 71 OF 168

LAST SAVED BY: CHusted

PROJECT NO. 200417-100000 FILE NAME: 204403_50C08.dwg

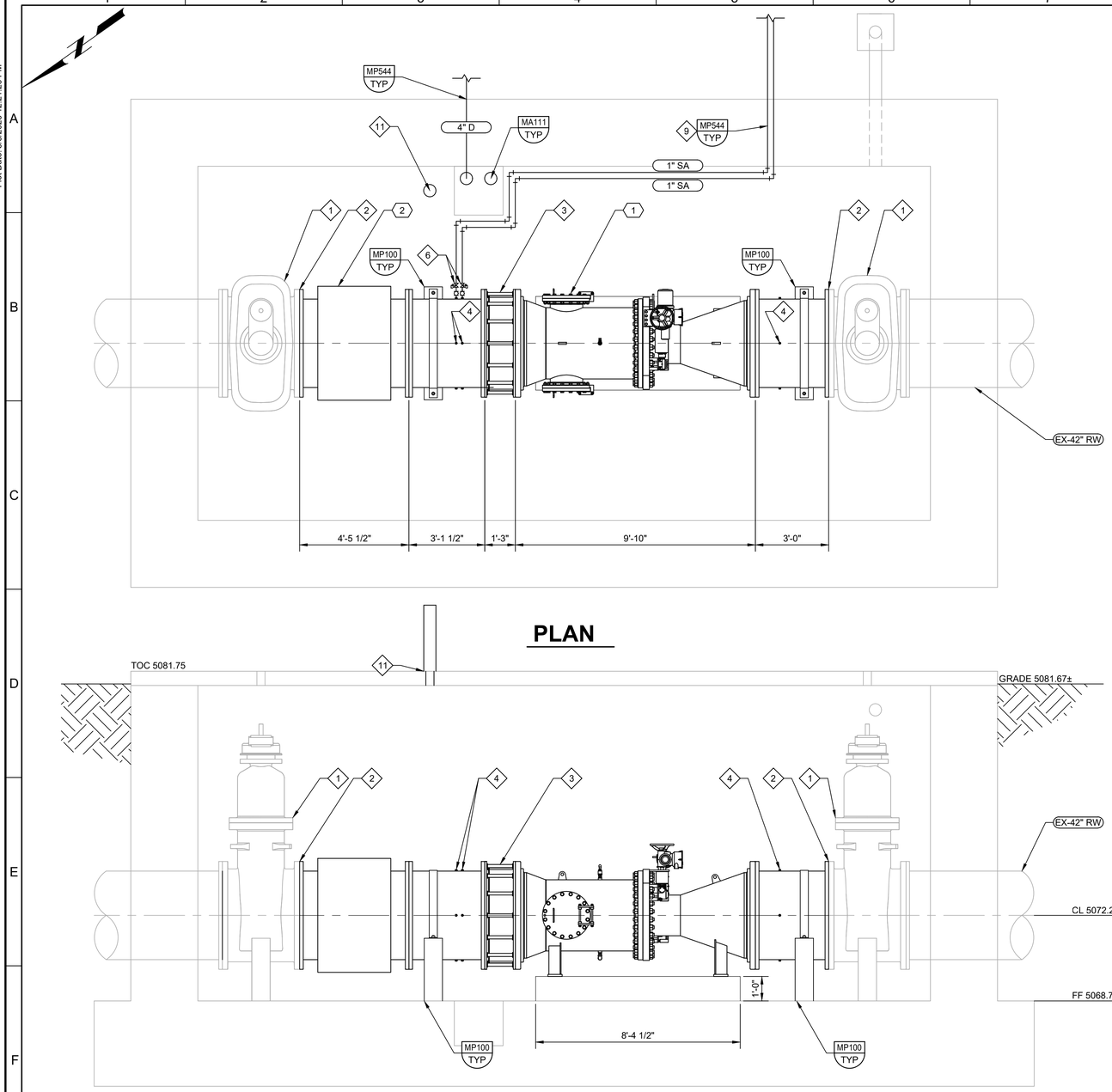

PRV VAULT

1 DETAIL 50C07

0 2' 4' 6'

SCALE: 3/8" = 1'-0"

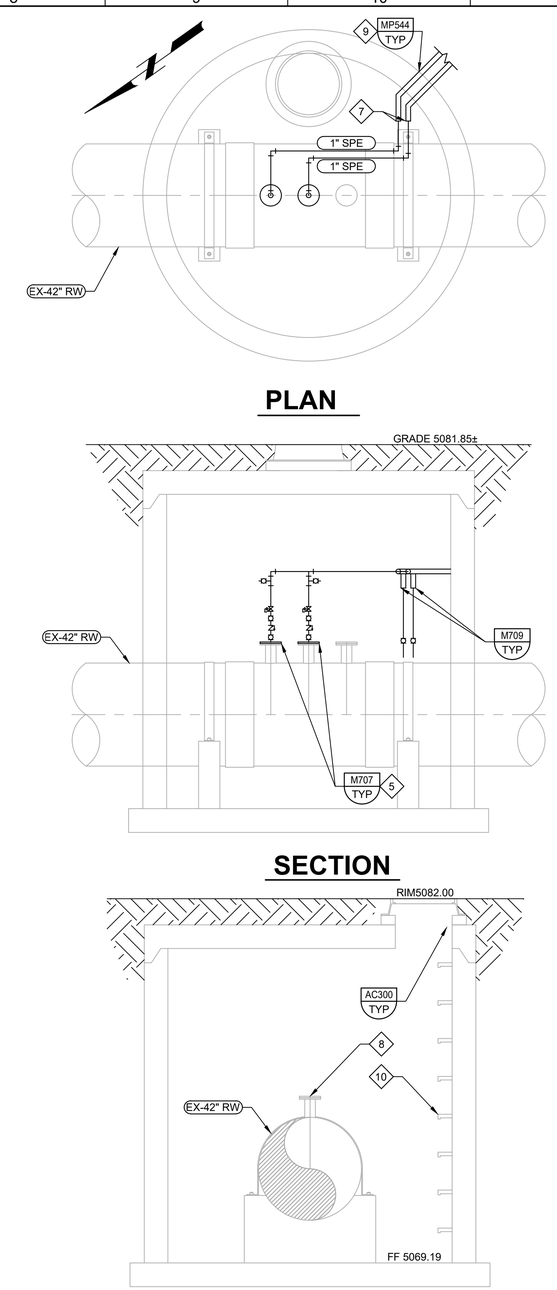

CHEMICAL INJECTION MANHOLE

2 DETAIL 50C07

0 2' 4' 6'

SCALE: 3/8" = 1'-0"

GENERAL NOTES:

1. ALL PIPING FLANGES SHALL BE AWWA C207 CLASS D.
2. PIPE WALL THICKNESS OF PIPING WITHIN VAULT SHALL MATCH THAT OF ADJACENT BURIED PIPING.
3. REMOVE 42" STEEL PIPE SPOOL BY CUTTING BUTT STRAP. PIPE SHALL BE SALVAGED AND RETURNED TO THE CITY OF THORNTON.
4. FIELD ROUTE AND PROVIDE SUPPORTS AT A MAXIMUM SPACING OF 3-FEET FOR ALL D, SA, AND SPE PIPING.

X KEY NOTES:

1. EXISTING 42 INCH AWWA RESILIENT SEAT GATE VALVE, NRS, AND VERTICAL SPUR GEAR AND 2" NUT.
2. FLANGE ISOLATION KIT PER DETAIL B, SHEET 00CP02.
3. 42 INCH DMJ, LAY LENGTH BASED ON ROMAC DJ400. CONTRACTOR TO MODIFY PIPE SPOOL LENGTHS TO ACCOMMODATE OTHER SPECIFIED MANUFACTURERS.
4. 1 INCH INTEGRALLY REINFORCED BRANCH OUTLETS AT 0, 90, 180, AND 270 DEGREES.
5. REMOVE EXISTING 4" BLIND FLANGE (TO BE SALVAGED AND RETURNED TO THE CITY OF THORNTON. INSTALL NEW SST 4 INCH TAPPED BLIND FLANGE, TAP THREADS SHALL BE NPT AND DIAMETER SHALL MATCH THAT OF THE INJECTION QUILL.
6. SAMPLE LINE PRESSURE REDUCING VALVE. SET PRESSURE TO 50 PSIG.
7. TERMINATE 3 INCH YARD CONTAINMENT PIPING AT MANHOLE AS SHOWN.
8. CHEMICAL INJECTION QUILLS/PIPING NOT SHOWN FOR CLARITY.
9. CORE PENETRATION WITH A MINIMUM 12 INCH SEPARATION.
10. PROVIDE MILLER SAF-T-CLIMB LADDER SYSTEM OR EQUAL ON EXISTING MANHOLE RUNGS.
11. AIR VENT PER CITY OF THORNTON TYPICAL DETAIL 200-20, SEE ELECTRICAL DRAWINGS FOR FAN INSTALLATION. CORE HOLE THROUGH EXISTING CONCRETE

KEY TAGS:

1	VAL-600	42" SLEEVE VALVE
2	FE-600	42" MAGNETIC FLOW METER

811 Know what's below. Call before you dig. usanorth811.org

REV	DATE	BY	DESCRIPTION
			BID SET

DESIGNED MEP
DRAWN MEP
CHECKED JJK
DATE MAY 2026

COLORADO LICENSED PROFESSIONAL ENGINEER 43662

carollo

THORNTON WATER PROJECT

CITY OF THORNTON - THORNTON WATER PROJECT

CHEMICAL BUILDING AND PRV VAULTS

CIVIL

CHEMICAL BUILDING PRV VAULT DETAILS

VERIFY SCALES
BAR IS ONE INCH ON ORIGINAL DRAWING
0 1"
IF NOT ONE INCH ON THIS SHEET, ADJUST SCALES ACCORDINGLY

JOB NO. 204403
DRAWING NO. 50C09
SHEET NO. 72 OF 168

Plot Date: 5/6/2026 12:21:26 PM

LAST SAVED BY: AEvans

PROJECT NO. 204403-100000 FILE NAME: 204403_50C09.dwg

Plot Date: 5/6/2026 12:43:22 PM

CITY OF THORNTON EROSION AND SEDIMENT CONTROL NOTES:

1. CONTROL MEASURES SHALL BE INSTALLED BEFORE ANY EARTH DISTURBING ACTIVITIES COMMENCE.
2. THE OWNER/CONTRACTOR SHALL NOTIFY THE THORNTON INSPECTOR ONCE ALL INITIAL CONTROL MEASURES HAVE BEEN INSTALLED FOR AN INITIAL INSPECTION AT LEAST FORTY EIGHT (48) HOURS PRIOR TO THE INSPECTION. CONSTRUCTION ACTIVITY CANNOT BEGIN UNTIL A PASSING INITIAL INSPECTION HAS OCCURRED.
3. ALL CONTROL MEASURES SHALL BE INSTALLED PER THE APPROVED PLAN. SHOULD ALTERNATIVE CONTROL MEASURES BE DESIRED AT ANY POINT, A RESPONSIBLE PARTY SHALL NOTIFY THE CITY FOR APPROVAL.
4. STORMWATER DISCHARGES FROM CONSTRUCTION ACTIVITIES SHALL NOT CAUSE, HAVE THE REASONABLE POTENTIAL TO CAUSE, OR MEASURABLY CONTRIBUTE TO EXCEED ANY WATER QUALITY STANDARD.
5. CONSTRUCTION SHALL BE PHASED IN A MANNER TO LIMIT EARTH DISTURBING ACTIVITIES (I.E. THE ENTIRE PROJECT SITE SHOULD NOT BE DISTURBED IF CONSTRUCTION WILL ONLY BE OCCURRING IN ONE PARTICULAR SECTION).
6. SEDIMENT CAUSED BY ACCELERATED SOIL EROSION SHALL BE REMOVED FROM RUNOFF WATER BEFORE IT LEAVES THE CONSTRUCTION SITE.
7. BULK STORAGE STRUCTURES FOR PETROLEUM PRODUCTS AND ANY OTHER CHEMICALS SHALL HAVE SECONDARY CONTAINMENT OR EQUIVALENT PROTECTION TO CONTAIN ALL SPILLS AND PREVENT ANY SPILLED MATERIAL FROM ENTERING THE MS4 OR STATE WATERS.
8. A COPY OF THE SWMP AND EROSION AND SEDIMENT CONTROL (ESC) PLANS MUST BE AVAILABLE AT ALL TIMES ON THE CONSTRUCTION SITE UNLESS OTHERWISE APPROVED BY CDPHE OR THORNTON.
9. THE SWMP AND EC PLAN SHALL BE CONTINUOUSLY UPDATED TO REFLECT NEW OR REVISED CONTROL MEASURES (CM) DUE TO CHANGES IN DESIGN, CONSTRUCTION, OPERATION, OR MAINTENANCE OF THE CONSTRUCTION SITE. UPDATES MUST BE MADE WITHIN 72-HOURS FOLLOWING THE CHANGE IN CONTROL MEASURES.
10. THE OWNER/CONTRACTOR SHALL INSPECT THE CONSTRUCTION SITE (INCLUDING ALL CONTROL MEASURES, STORAGE CONTAINERS, AND CONSTRUCTION EQUIPMENT) AT A MINIMUM OF EVERY 7 CALENDAR DAYS OR EVERY 14 CALENDAR DAYS. IF ON THE 14 DAY FREQUENCY A 24-HOUR POST STORM INSPECTION MUST BE CONDUCTED AFTER A PRECIPITATION EVENT OR SNOW MELT. INSPECTIONS SHALL CONTINUE UNTIL AN INACTIVATION NOTICE IS FILED WITH CDPHE.
11. THE OWNER/CONTRACTOR SHALL KEEP A RECORD OF ALL INSPECTIONS ON SITE AND AVAILABLE FOR REVIEW BY CDPHE OR CITY STAFF. INSPECTION REPORTS MUST IDENTIFY ANY INCIDENTS OF NON-COMPLIANCE WITH THE TERMS AND CONDITIONS OF THE PERMIT.
12. CONTROL MEASURES REQUIRING MAINTENANCE OR ADJUSTMENT SHALL BE REPAIRED IMMEDIATELY AFTER OBSERVATION OF THE FAILING CONTROL MEASURE.
13. SILT FENCE PATCHING: PATCHING IS ONLY ALLOWED ON THE TOP HALF OF THE FENCE. NOT MORE THAN TWO (2) PATCHES PER SECTION OF FENCE. SILT FENCE WITH HOLES OR DETERIORATION ON THE LOWER HALF OF THE FENCE MUST BE REPLACED. REPAIR TYPICALLY INVOLVES REPLACING THE SILT FENCE TO MAINTAIN THE CMS EFFECTIVENESS TO DRAIN SLOWLY AND FUNCTION AS ORIGINALLY DESIGNED.
14. REINFORCED OR SUPPLEMENTED CONTROL MEASURES ARE REQUIRED ALONG ALL DRAINAGEWAYS OR CONVEYANCES.
15. FOR ALL INSTANCES OF NONCOMPLIANCE BASED ON ENVIRONMENTAL HAZARDS AND CHEMICAL SPILLS AND RELEASES, ALL NEEDED INFORMATION MUST BE PROVIDED ORALLY TO CDPHE SPILL REPORTING LINE (24-HOUR NUMBER FOR ENVIRONMENTAL HAZARDS AND CHEMICAL SPILLS AND RELEASES: 1-877-518-5608) WITHIN 24-HOURS FROM THE TIME THE OWNER/CONTRACTOR BECOMES AWARE OF THE CIRCUMSTANCES.
16. STRAW BALES SHALL NOT BE USED FOR PRIMARY EROSION OR SEDIMENT CONTROL (I.E. STRAW BALES MAY BE USED FOR REINFORCEMENT BEHIND ANOTHER BMP SUCH AS SILT FENCE).
17. CONTROL MEASURES REFERRED TO AS "CUTBACK CURB" ARE NOT ALLOWED. THE CUTBACK CURB MAY BECOME INEFFECTIVE AND MAY ALSO COMPROMISE THE INTEGRITY OF THE CURB AND IN MOST CASES DOES NOT PROVIDE ANY WATER QUALITY BENEFIT FOR FILTERING OUT SEDIMENT.
18. INLET PROTECTION AND VEGETATIVE BUFFER CONTROL MEASURES SHALL NOT BE USED AS STANDALONE CMS. THESE METHODS MUST BE UTILIZED WITH AT LEAST ONE ADDITIONAL CM.
19. CONTROL MEASURES INTENDED FOR SHEET FLOW SEDIMENT RUNOFF SHALL BE PLACED PARALLEL TO THE SLOPE.
20. ALL CONTROL MEASURES SHALL BE CLEANED WHEN SEDIMENT LEVELS ACCUMULATE TO HALF THE DESIGN OF THE CM UNLESS OTHERWISE SPECIFIED.
21. A VEHICLE TRACKING CONTROL (VTC) SHALL BE PLACED AT ALL ENTRANCES/EXITS FROM THE SITE AS WELL AS ANY EGRESS FROM EXPOSED DIRT TO PAVED AREAS TO PREVENT TRACK-OUT ONTO STREETS. IF TRACK-OUT DOES OCCUR, THE OWNER/CONTRACTOR SHALL IMMEDIATELY SWEEP THE STREET OF DEBRIS. RECYCLED CRUSHED CONCRETE OR ASPHALT SHALL NOT BE USED FOR VEHICLE TRACKING PADS.
22. FOR RESIDENTIAL PROJECTS, BACK OF CURB PROTECTION IS REQUIRED ALONG ALL INTERIOR LOTS.
23. ALL SEDIMENT COLLECTED IN CONTROL MEASURES SHALL BE REMOVED UPON INITIAL ACCEPTANCE.
24. USAGE OF RECYCLED CONCRETE IS PROHIBITED THROUGHOUT THE SITE. THIS INCLUDES BUT IS NOT LIMITED TO ANY USAGE IN THE VICINITY OF A TREATMENT FEATURE, STAGING OR TEMPORARY ROADWAY MATERIAL, OR AS PART OF MAINTENANCE ACCESS ROADS.
25. WIND EROSION AND DUST CONTROL MEASURES MUST BE UTILIZED TO MINIMIZE AIRBORNE PARTICULATE DUST. CONTROL MEASURES MAY INCLUDE MINIMIZING DISTURBED AREAS, WATERING, AND/OR PROVIDING TEMPORARY STABILIZATION.
26. FOR ALL USAGE OF ROLLED EROSION CONTROL PRODUCTS, ONLY BIODEGRADABLE NETTING AND STAKES SHALL BE USED.
27. PERMANENT EROSION CONTROL MEASURES FOR SLOPES, CHANNELS, DITCHES, OR ANY DISTURBED LAND AREA SHALL BE COMPLETED WITHIN 14 CALENDAR DAYS AFTER FINAL GRADING OR THE FINAL EARTH DISTURBANCE HAS BEEN COMPLETED. WHEN IT IS NOT POSSIBLE TO PERMANENTLY STABILIZE A DISTURBED AREA AFTER AN EARTH DISTURBANCE HAS BEEN COMPLETED OR WHERE SIGNIFICANT EARTH DISTURBANCE ACTIVITY CEASES, TEMPORARY SOIL EROSION CONTROL MEASURES SHALL BE IMPLEMENTED WITHIN 14 CALENDAR DAYS. TEMPORARY EROSION CONTROL MEASURES SHALL BE MAINTAINED UNTIL PERMANENT SOIL EROSION MEASURES ARE IMPLEMENTED.
28. FINAL STABILIZATION HAS BEEN ACHIEVED WHEN ALL EARTH DISTURBING ACTIVITIES AT THE SITE HAVE BEEN COMPLETED, AND UNIFORM VEGETATIVE COVER HAS BEEN ESTABLISHED WITH AN INDIVIDUAL PLANT DENSITY OF AT LEAST 70 PERCENT OF PRE-DISTURBANCE LEVELS, OR EQUIVALENT PERMANENT, PHYSICAL EROSION REDUCTION METHODS HAVE BEEN EMPLOYED.
29. CITY OF THORNTON RECOMMENDS TEMPORARY OR PERMANENT IRRIGATION WHERE APPROPRIATE TO ACHIEVE FUNCTIONALITY.
30. ALL TEMPORARY CONTROL MEASURES SHALL BE REMOVED FROM THE SITE UPON SUBMITTING THE INACTIVATION NOTICE.
31. ALL SITE WASTES (INCLUDING TRASH AND BUILDING MATERIALS) MUST BE PROPERLY MANAGED TO PREVENT POTENTIAL POLLUTION DISCHARGES TO THE MS4 OR STATE WATERS.
32. STREET REPAIR OPERATIONS SUCH AS ROTOR MILLING, SLURRY SEAL AND CHIP SEAL. THE MINIMUM CMS REQUIRED ARE; INLET PROTECTION, CURB SOCKS AND STREET SWEEPING.

CITY OF THORNTON BMP LEGEND:

CF		CONSTRUCTION FENCE
CW	LOC	CONCRETE WASHOUT/ LIQUID WASTE WASHOUT
LOC		LIMITS OF CONSTRUCTION
SCL		SEDIMENT CONTROL LOG
SF	SF	SILT FENCE
SM		SEEDING AND MULCHING
SSA		STABILIZED STAGING AREA
VTC		VEHICLE TRACKING CONTROL

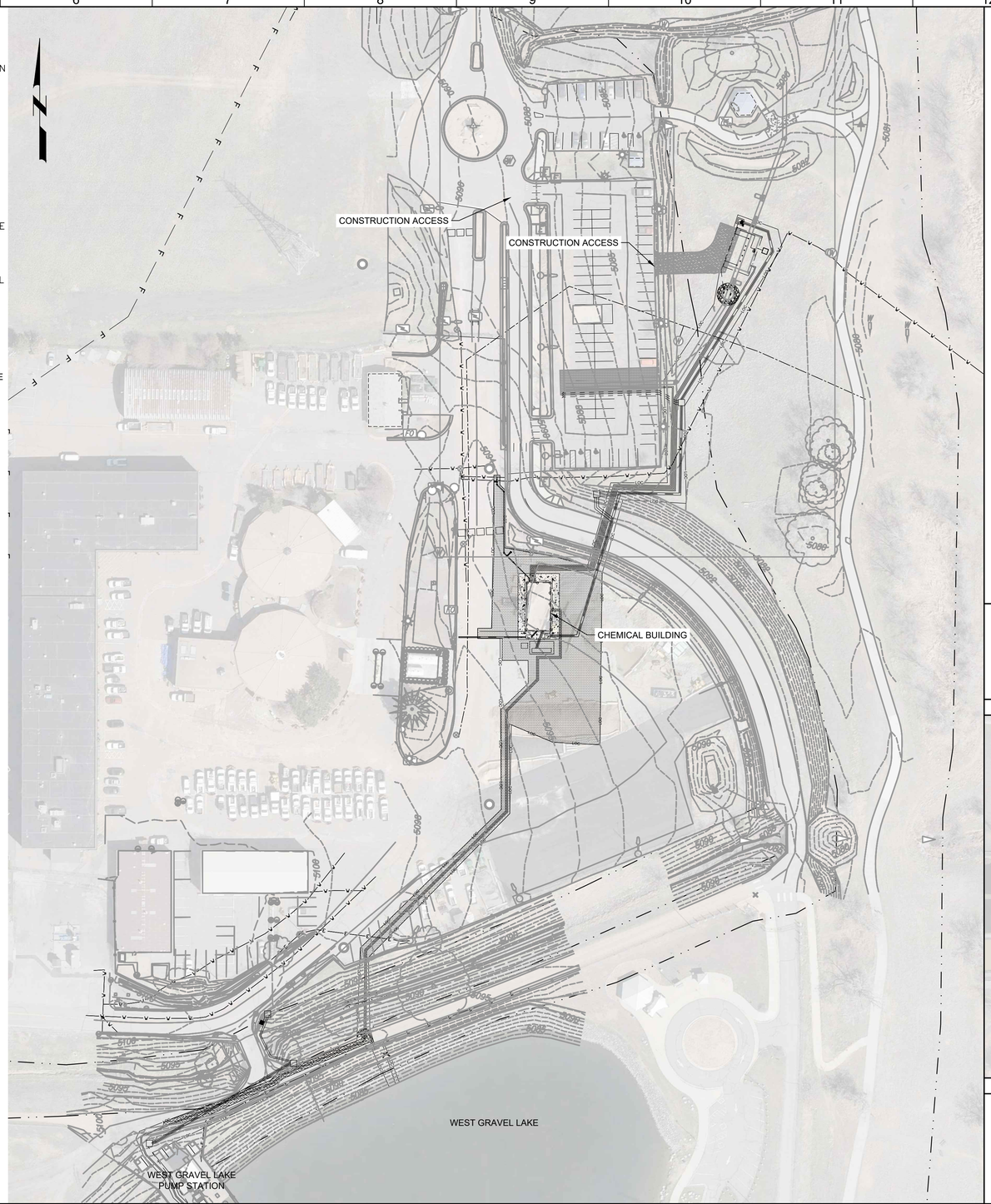

GENERAL NOTES:

1. BASIS OF SURVEY: NAD 1983/2011 AND NAVD88. SEE SURVEY CONTROL DIAGRAM FOR MORE DETAILED DESCRIPTION.

811 Know what's below. Call before you dig.

Call before you Overhead

KEY MAP

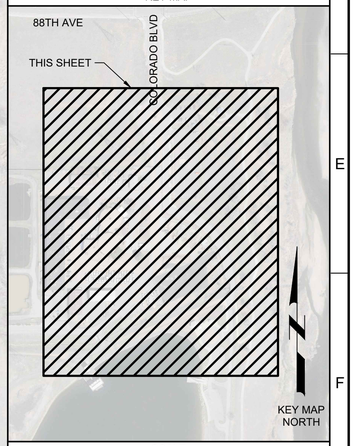

SCALE

0 30' 60' 120'

SCALE: 1" = 60' (HORIZ)

REV	DATE	BY	DESCRIPTION
			BID SET

DESIGNED CDH
DRAWN CDH
CHECKED JJK
DATE MAY 2026

COLORADO LICENSED 55165 PROFESSIONAL ENGINEER

carollo

THORNTON WATER PROJECT

CITY OF THORNTON - THORNTON WATER PROJECT

CHEMICAL BUILDING AND PRV VAULTS

CIVIL

CHEMICAL BUILDING - EROSION CONTROL NOTES, LEGEND, AND ACCESS MAP

VERIFY SCALES
BAR IS ONE INCH ON ORIGINAL DRAWING
0 1"
IF NOT ONE INCH ON THIS SHEET, ADJUST SCALES ACCORDINGLY

JOB NO. 204403
DRAWING NO. 50EC01
SHEET NO. 73 OF 168

LAST SAVED BY: CHusted

PROJECT NO. 200417-100000 FILE NAME: 204403_50EC01.dwg

Plot Date: 5/6/2026 12:47:41 PM

INITIAL/INTERIM SCL

INITIAL/INTERIM SSA

FLOW (TYP)

INITIAL/INTERIM CW

INITIAL/INTERIM VTC

INITIAL/INTERIM CW

INITIAL/INTERIM SCL

INITIAL/INTERIM SSA

FEMA 100-YR FLOODPLAIN

FEMA FLOODWAY

WEST GRAVEL LAKE

INITIAL/INTERIM VTC

INITIAL/INTERIM CF

INITIAL/INTERIM SF

WETLANDS

ORDINARY HIGH WATER MARK

GENERAL NOTES:

1. BASIS OF SURVEY: NAD 1983/2011 AND NAVD88. SEE SURVEY CONTROL DIAGRAM FOR MORE DETAILED DESCRIPTION.

811 Know what's below. Call before you dig.

Call before you Overhead

KEY MAP

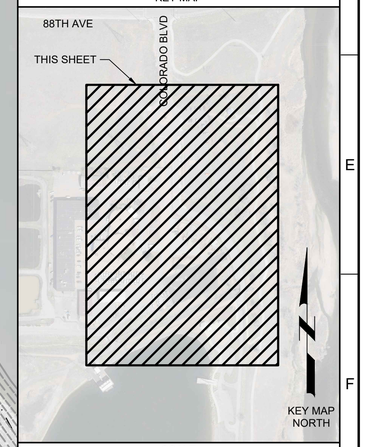

SCALE

0 20' 40' 80'

SCALE: 1" = 40' (HORIZ)

REV	DATE	BY	DESCRIPTION
			BID SET

DESIGNED CDH
DRAWN CDH
CHECKED JJK
DATE MAY 2026

COLORADO LICENSED COURTNEY D. HUNTER 55165 PROFESSIONAL ENGINEER

carollo

THORNTON WATER PROJECT

CITY OF THORNTON - THORNTON WATER PROJECT

CHEMICAL BUILDING AND PRV VAULTS

CIVIL

CHEMICAL BUILDING - EROSION CONTROL PLAN INITIAL/INTERIM

VERIFY SCALES
BAR IS ONE INCH ON ORIGINAL DRAWING
0 1"
IF NOT ONE INCH ON THIS SHEET, ADJUST SCALES ACCORDINGLY

JOB NO. 204403
DRAWING NO. 50EC02
SHEET NO. 74 OF 168

LAST SAVED BY: Chusted

PROJECT NO. 200417-100000 FILE NAME: 204403_50EC02.dwg

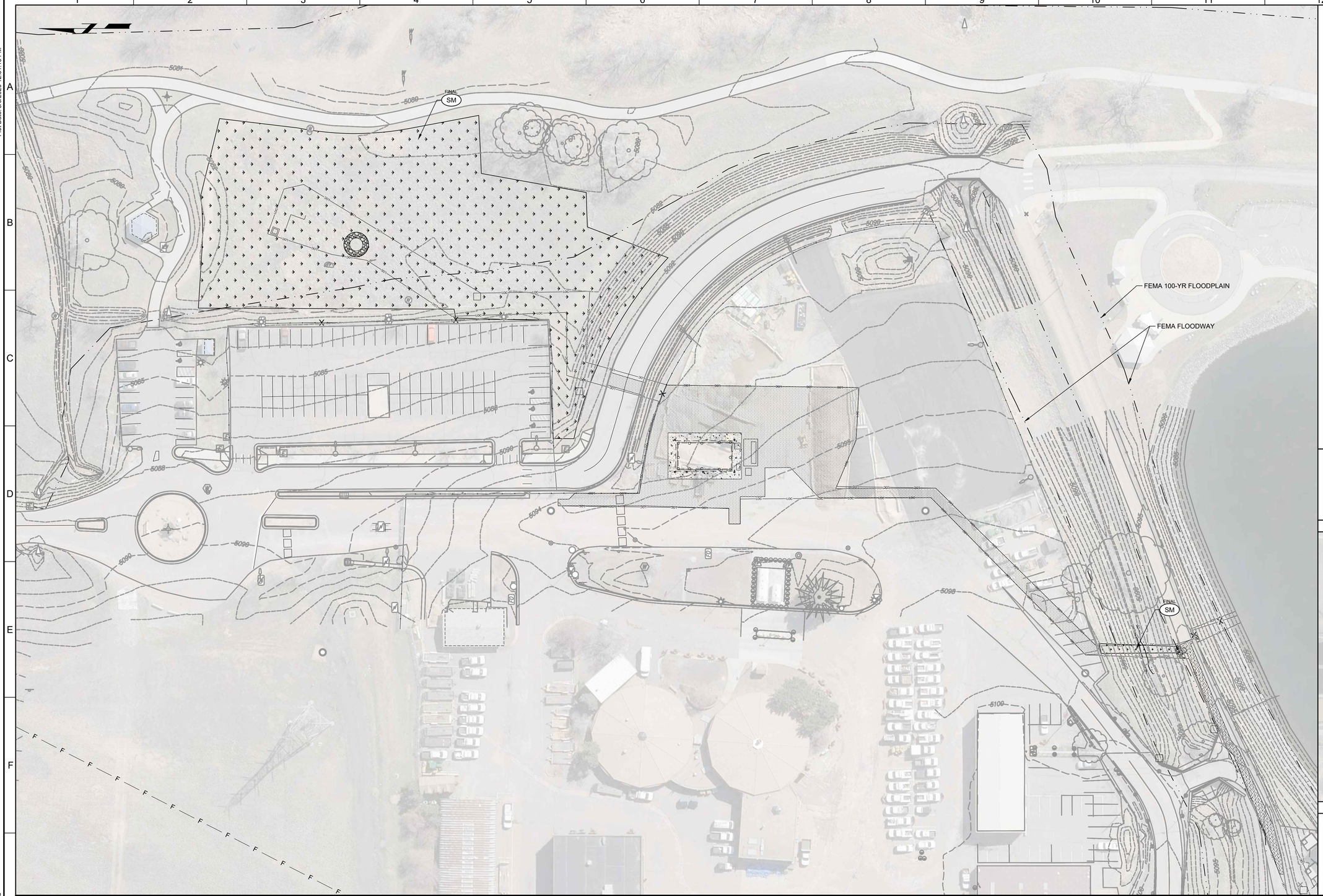

GENERAL NOTES:

1. BASIS OF SURVEY: NAD 1983/2011 AND NAVD88. SEE SURVEY CONTROL DIAGRAM FOR MORE DETAILED DESCRIPTION.

811 Know what's below. Call before you dig.

Call before you Overhead

KEY MAP

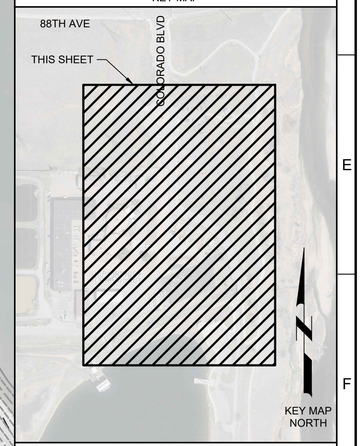

SCALE

0 20' 40' 80'

SCALE: 1" = 40' (HORIZ)

REV	DATE	BY	DESCRIPTION
			BID SET

DESIGNED CDH
DRAWN CDH
CHECKED JJK
DATE MAY 2026

COLORADO LICENSED COURTNEY D. HUNTER 55165 PROFESSIONAL ENGINEER

carollo

THORNTON WATER PROJECT

CITY OF THORNTON - THORNTON WATER PROJECT

CHEMICAL BUILDING AND PRV VAULTS

CIVIL

CHEMICAL BUILDING - EROSION CONTROL PLAN FINAL

VERIFY SCALES
BAR IS ONE INCH ON ORIGINAL DRAWING
0 1"
IF NOT ONE INCH ON THIS SHEET, ADJUST SCALES ACCORDINGLY

JOB NO. 204403
DRAWING NO. 50EC03
SHEET NO. 75 OF 168

ABBREVIATIONS

ADJ	ADJACENT
AFF	ABOVE FINISHED FLOOR
AL	ALUMINUM
ARCH	ARCHITECTURAL
BD	BOARD
BLDG	BUILDING
BM	BEAM
BO	BOTTOM OF
BOT	BOTTOM
BRG	BEARING
BRK	BRICK
BTWN	BETWEEN
BUR	BUILT UP ROOFING
CJ	CONTROL JOINT
CLG	CEILING
CLR	CLEAR
CMT	CERAMIC MOSAIC TILE
CMU	CONCRETE MASONRY UNITS
COL	COLUMN
CONC	CONCRETE
CONST	CONTINUOUS
COORD	COORDINATE
CORR	CORRIDOR
CPT	CARPET
CTR	CENTER
CWT	CERAMIC WALL TILE
DF	DRINKING FOUNTAIN
DIA	DIAMETER
DIM	DIMENSION
DN	DOWN
DP	DAMPPROOFING
DR	DOOR
DTL	DETAIL
DW	DISHWASHER
DWG	DRAWING
(E), EXIST	EXISTING
EA	EACH
ELEV	ELEVATION
EQ	EQUAL
EQPT	EQUIPMENT
EXT	EXTERIOR
FD	FLOOR DRAIN
FDN	FOUNDATION
FE	FIRE EXTINGUISHER
FEC	FIRE EXTINGUISHER CABINET
FIN	FINISH(ED)
FLASH	FLASHING
FLR	FLOOR
FRP	FIBERGLASS REINFORCED PLASTIC
FTG	FOOTING
JST	JOIST
JT	JOINT
KIT	KITCHEN
GA	GAUGE
GALV	GALVANIZED
GYP BD	GYPSUM BOARD
HC	HOLLOW CORE
HD	HEAD
HDWR	HARDWARE
HM	HOLLOW META.
HORIZ	HORIZONTAL
HT	HEIGHT
IN	INCH
INSUL	INSULATION
INT	INTERIOR
LAV	LAVATORY
MAX	MAXIMUM
MECH	MECHANICAL
MFR	MANUFACTURER
MIN	MINIMUM
MISC	MISCELLANEOUS
MO	MASONRY OPENING
MTL	METAL
NIC	NOT IN CONTRACT
NO	NUMBER
NTS	NOT TO SCALE
OC	ON CENTER
OD	OVERFLOW DRAIN
OPG	OPENING
OPP	OPPOSITE
PERIM	PERIMETER
PREFIN	PREFINISHED
PLAS LAM	PLASTIC LAMINATE
PLYWD	PLYWOOD
R	RISER
RB	RUBBER BASE
RD	ROOF DRAIN
RE:	REFER TO
REQD	REQUIRED
RM	ROOM
RND	ROUND
RO	ROUGH OPENING
R/R	REMOVE & REPLACE
SAC	SUSPENDED ACOUSTICAL CEILING
SC	SOLID CORE
SCHED	SCHEDULE
SECT	SECTION
SF	SQUARE FOOT, SQUARE FEET
SHT	SHEET
SHTG	SHEATHING
SIM	SIMILAR
SPEC	SPECIFICATION
SQ	SQUARE
SS	STAINLESS STEEL
STL	STEEL
STRUCT	STRUCTURAL
SYM	SYMMETICAL
T	TREAD
T&B	TOP & BOTTOM
TEMP	TEMPERED
T&G	TONGUE & GROOVE
TH	THICK
TO	TOP OF
TOB	TOP OF BEAM
TOC	TOP OF CONCRETE, TOP OF CURB
TOF	TOP OF FOOTING
TOJ	TOP OF JOIST
TOM	TOP OF MASONRY
TOW	TOP OF WALL
TS	TUBE STEEL
TYP	TYPICAL
TZ	TERRAZO
UNO	UNLESS NOTED OTHERWISE
VCT	VINYL COMPOSITION TILE
VERT	VERTICAL
VIF	VERIFY IN FIELD
W	WIDE
W/	WITH
WC	WATER CLOSET
WD	WOOD
W/O	WITHOUT
WP	WATERPROOFING

GENERAL NOTES

1. UNLESS OTHERWISE NOTED, PLAN DIMENSIONS ARE TO NOMINAL SURFACE OF MASONRY AND CONCRETE.
2. DIMENSIONS OF DOORS, WINDOWS & OTHER ITEMS IN WALLS ARE BASED ON NOMINAL MASONRY COURSING OR ROUGH OPENING DIMENSIONS. FIELD VERIFY AND/OR COORDINATE DIMENSIONS OF ITEMS W/MASONRY &/OR FRMG CONSTRUCTION AS REQUIRED.
3. "FINISH FLOOR" REFERS TO TOP OF CONCRETE SLABS. FOR DEPRESSED FLOOR, PADS AND CURBS, SEE STRUCT DRAWINGS. SEE BUILDING SECTIONS FOR VARYING CONDITIONS.
4. REPETITIVE FEATURES ARE NOT DRAWN IN THEIR ENTIRETY AND SHALL BE COMPLETELY PROVIDED AS IF DRAWN IN FULL.
5. VERIFY ACTUAL SIZES OF ALL EQUIPMENT TO BE PROVIDED IN THIS CONTRACT OR BY OTHERS & COORD ALL ROUGH-IN & SUBSTRATE DIMENSIONS TO DETERMINE ACTUAL REQUIRED SIZES OF & LOCATIONS OF PADS, CURBS, KNOCKOUTS, BLOCKOUTS, ETC.
6. VERIFY AND COORD SIZE AND LOCATION OF ACCESS DOORS, CURBS, PADS, WALL MOUNTED EQUIPMENT AND ACCESSORIES TO PROVIDE ALL OPENINGS THROUGH FLOORS AND WALLS AND/OR ALL BASES, ANCHORS, INSERTS & BLOCKING.
7. NOTES ON DRAWINGS INDICATE SOME OF THE ITEMS TO BE PAINTED. REFER TO SPECIFICATIONS FOR OTHER REQUIREMENTS FOR ITEMS TO BE PAINTED AND PAINT SYSTEMS FOR EACH SUBSTRATE AND/OR MATERIAL.
8. REFER TO PROCESS, ARCHITECTURAL, STRUCTURAL, MECHANICAL, ELECTRICAL AND OTHER CATEGORIES OF DRAWINGS FOR ADDITIONAL NOTES.
9. PERFORMANCE SHALL MEET REQUIREMENTS OF THE INTERNATIONAL ENERGY CONSERVATION CODE (IECC) 2021.
10. DO NOT SCALE DRAWINGS. WRITTEN DIMENSIONS SHALL ESTABLISH LOCATION OF ALL PARTITIONS, OPENINGS, EQUIPMENT, ETC.
11. LARGER SCALE DRAWINGS AND DETAILS HAVE PRIORITY OVER SMALLER SCALE DRAWINGS.
12. CONTRACTOR SHALL NOTIFY THE ARCHITECT OF ANY DISCREPANCIES OR CONFLICTS IN THE DRAWINGS AND/OR SPECIFICATIONS TO REQUEST AND RECEIVE AN INTERPRETATION OR CLARIFICATION BEFORE PROCEEDING WITH CONSTRUCTION.
13. CONTRACTOR SHALL VERIFY FIELD CONDITIONS BEFORE PROCEEDING WITH CONSTRUCTION.

BUILDING CODE ANALYSIS

BUILDING CODES:	2024 INTERNATIONAL BUILDING CODES 2024 INTERNATIONAL ENERGY CONSERVATION CODE 2024 INTERNATIONAL MECHANICAL CODE 2024 INTERNATIONAL PLUMBING CODE 2024 INTERNATIONAL FUEL GAS CODE 2023 NATIONAL ELECTRICAL CODE	
OCCUPANCY:	F-1	MODERATE HAZARD (NON-SPRINKLERED WATER/SEWER TREATMENT FACILITIES)
	H-3	HIGH HAZARD (SPRINKLERED)
CONSTRUCTION TYPE:	TYPE II-B	
ALLOWABLE AREAS:	F-1 H-3	15,500 SF (NS) 14,000 SF (S1)
ALLOWABLE HEIGHTS:	F-1 H-3	2 STORIES, 55' (NS) 2 STORIES, 55' (S1)
ACTUAL AREAS:	F-1 H-3	265 SF 825 SF
SEPARATED OCCUPANCIES:	265/15,500 + 825/14,000 = 0.076 < 1 (PER 508.4.2)	
REQUIRED SEPARATION OF OCCUPANCIES:	F-1 / H-3 = 2 HR PER TABLE 508.4	
OCCUPANT LOAD:	INDUSTRIAL AREAS: 1 OCCUPANT PER 100 GROSS SF MAIN LEVEL 1090 SF / 100 = 10 OCCUPANTS	
FIRE EXTINGUISHERS:	IBC 906.3.1: FIRE EXTINGUISHERS PROVIDED PER IBC TABLE 906.3(1)	
AUTOMATIC SPRINKLER SYSTEMS:	PER 415.4 GROUP H OCCUPANCIES SHALL BE EQUIPPED THROUGHOUT WITH AN AUTOMATIC SPRINKLER SYSTEM IN ACCORDANCE WITH SECTION 903.2.5.	
EXIT ACCESS TRAVEL DISTANCE:	PER TABLE 1017.2 H-3 OCCUPANCY = 150 FEET MAXIMUM	
COMMON PATH OF EGRESS TRAVEL:	PER TABLE 1006.2.1 H-3 OCCUPANCY = 25 FEET MAXIMUM	
REQUIRED EXITS:	MAIN LEVEL:	2 EXITS
ACTUAL EXITS:	MAIN LEVEL:	4 EXITS
THERMAL ENVELOPE COMPLIANCE:	REQUIRED THERMAL ENVELOPE WITH 2024 IECC CLIMATE ZONE: 5 ROOF INSULATION: R-30 CI MASS WALL: R-11.4 CI OPAQUE DOORS: U-0.37 GARAGE DOORS: U-0.31 UNHEATED SLABS: R-15 FOR 24" FENESTRATION: U-0.34 (FIXED)	
	PROVIDED THERMAL ENVELOPE WITH 2024 IECC CLIMATE ZONE: 5 ROOF INSULATION: R-30 CI MASS WALL: R-14 CI OPAQUE DOORS: U-0.37 GARAGE DOORS: U-0.31 UNHEATED SLABS: R-15 FOR 24" FENESTRATION: U-0.34 (FIXED)	
HAZARDOUS OCCUPANCIES:	IBC 414.3: A MANUAL SHUTOFF FOR VENTILATION EQUIPMENT IS PROVIDED OUTSIDE THE H-3 OCCUPANCY ADJACENT TO THE PRINCIPAL DOOR. IBC 414.5.2: MONITOR CONTROL EQUIPMENT IS PROVIDED. FIRE ALARM, FIRE SPRINKLER SYSTEMS WILL BE CONNECTED TO FIRE ALARM CONTROL PANEL THAT WILL CONTACT FIRE DEPARTMENT IN EMERGENCY. SECONDARY CONTAINMENT IS MONITORED BY VISUAL INSPECTION AS ALLOWED PER 2024 IFC 5004.2.2.5. IBC 414.5.3: EMERGENCY OR STANDBY POWER FOR VENTILATION SYSTEMS IS PROVIDED. FULL BUILDING EMERGENCY POWER IS PROVIDED. VENTILATION SYSTEMS AND LIGHTS ARE FIRST COMPONENTS TO SERVICE DURING A POWER OUTAGE. IBC 414.5.4: SPILL CONTROL AND CONTAINMENT IS PROVIDED. NO DRAINAGE COMPONENTS PROVIDED. ALL SECONDARY CONTAINMENT IS CONTAINED WITHIN A SUMP AND MANUALLY DISPOSED OF AFTER SITUATION STABILIZED. IBC 414.7.1: AN EMERGENCY ALARM ALERTING OCCUPANTS TO AN EMERGENCY SITUATION INVOLVING HAZARDOUS MATERIALS IS PROVIDED.	
FIRE ALARM AND DETECTION SYSTEMS:	AN APPROVED FIRE ALARM SYSTEM IN ACCORDANCE WITH NFPA 72 SHALL BE PROVIDED AND PROVIDE OCCUPANT NOTIFICATION IN ACCORDANCE WITH 907.5. A MINIMUM OF ONE MANUAL FIRE ALARM BOX SHALL BE PROVIDED TO INITIATE A FIRE ALARM SIGNAL FOR FIRE ALARM SYSTEM EMPLOYING AUTOMATIC FIRE DETECTORS.	
	PORTABLE FIRE EXTINGUISHERS (TBL 906.3(1))	
	MAX FLOOR AREA PER EXTINGUISHER = 11,250 SF	
	MAXIMUM TRAVEL DISTANCE TO EXTINGUISHER: 75 FT	
KEY BOXES:	IFC 506.1: KEY BOXES PER UL 1037 WILL BE PROVIDED IN LOCATIONS APPROVED BY THE FIRE CODE OFFICIAL	
ACCESSIBILITY:	F-1 OCCUPANCY: EXEMPT FROM ACCESSIBILITY REQUIREMENTS PER IBC 1103.2.9	
SEPARATIONS PROVIDED:	2 HR FIRE BARRIER: COMPRISED OF 12" CMU, WITH 3.2" MIN. FINISHED THICKNESS FACE-TO-FACE PER IBC TABLE 721.1(2), UNGROUTED CORES FILLED WITH EXPANDED SLAG OR PUMICE. FINISH TIGHT TO UNDERSIDE OF CONCRETE ROOF STRUCTURE AND FIRESTOP WITH A UL LISTED ASSEMBLY, TYP. RE: STRUCT	

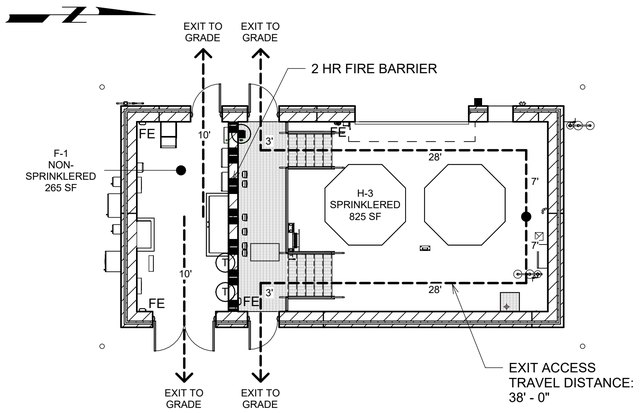

A CODE ANALYSIS

0 4' 8' 16'

SCALE: 1/8" = 1'-0"

CHEMICAL TABLE

CHEMICAL			HAZARD - GHS / OSHA							NFPA 704 IDENTIFICATION			
NAME	CAS NUMBER	FORMULA	TYPE	CLASSIFICATION	STATE	SOLUTION STRENGTH	EXEMPT AMOUNT	ACTUAL AMOUNT	CONTAINER	OCCUPANCY	HEALTH	FIRE	REACTIVITY	SPECIFIC
SODIUM PERMANGANATE	10101-50-5	NaMnO4	OXIDIZING	CATEGORY 2	LIQUID	20%	500 GAL	8,000 GALLONS	POLYETHYLENE TANKS	H-3	3	0	1	OX
			CORROSIVE	CATEGORY 1										

REV	DATE	BY	DESCRIPTION
			BID SET

DESIGNED SBA
DRAWN CC
CHECKED PB
DATE MAY 2026

STATE OF COLORADO PATRICK M. BRENNAN 400493 04/30/26 LICENSED ARCHITECT

carollo®

THORNTON WATER PROJECT

CITY OF THORNTON-THORNTON WATER PROJECT
CHEMICAL BUILDING AND PRV VAULTS
ARCHITECTURE
CHEMICAL BUILDING
BUILDING CODE ANALYSIS

VERIFY SCALES
BAR IS ONE INCH ON ORIGINAL DRAWING
0 1"
IF NOT ONE INCH ON THIS SHEET, ADJUST SCALES ACCORDINGLY

JOB NO. 204403
DRAWING NO. 50A01
SHEET NO. 76 OF 168

PLOT DATE: 5/4/2026 9:34:19 AM

FILE NAME: c:\pw_working\carollo_200000\d0583912\204403_50A0601_v24.rvt

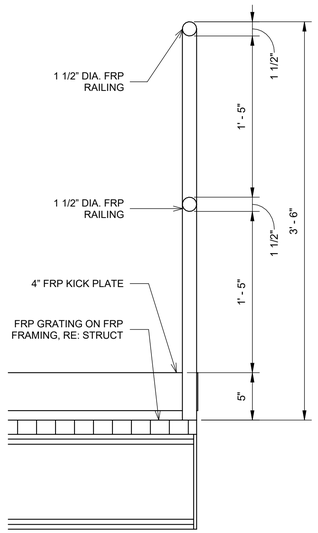

2 TYP. GUARD

0 6" 1'-0" 1'-6"

SCALE: 1 1/2" = 1'-0"

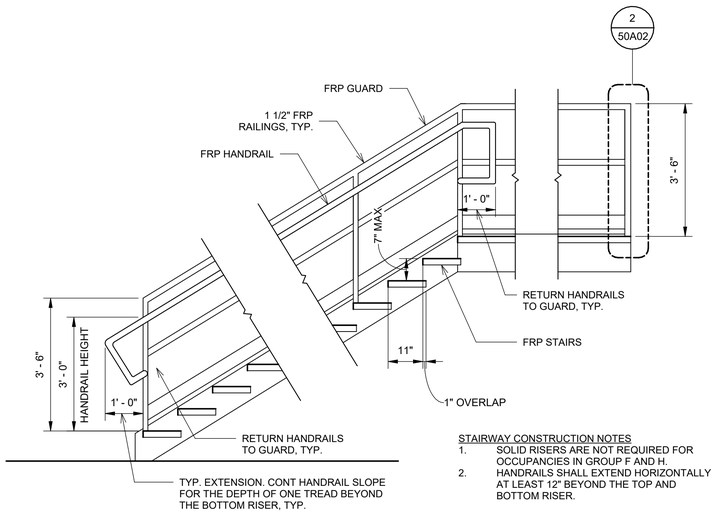

STAIRWAY CONSTRUCTION NOTES

1. SOLID RISERS ARE NOT REQUIRED FOR OCCUPANCIES IN GROUP F AND H. HANDRAILS SHALL EXTEND HORIZONTALLY AT LEAST 12" BEYOND THE TOP AND BOTTOM RISER.

1 FRP STAIR SECTION

0 1' 2' 4'

SCALE: 1/2" = 1'-0"

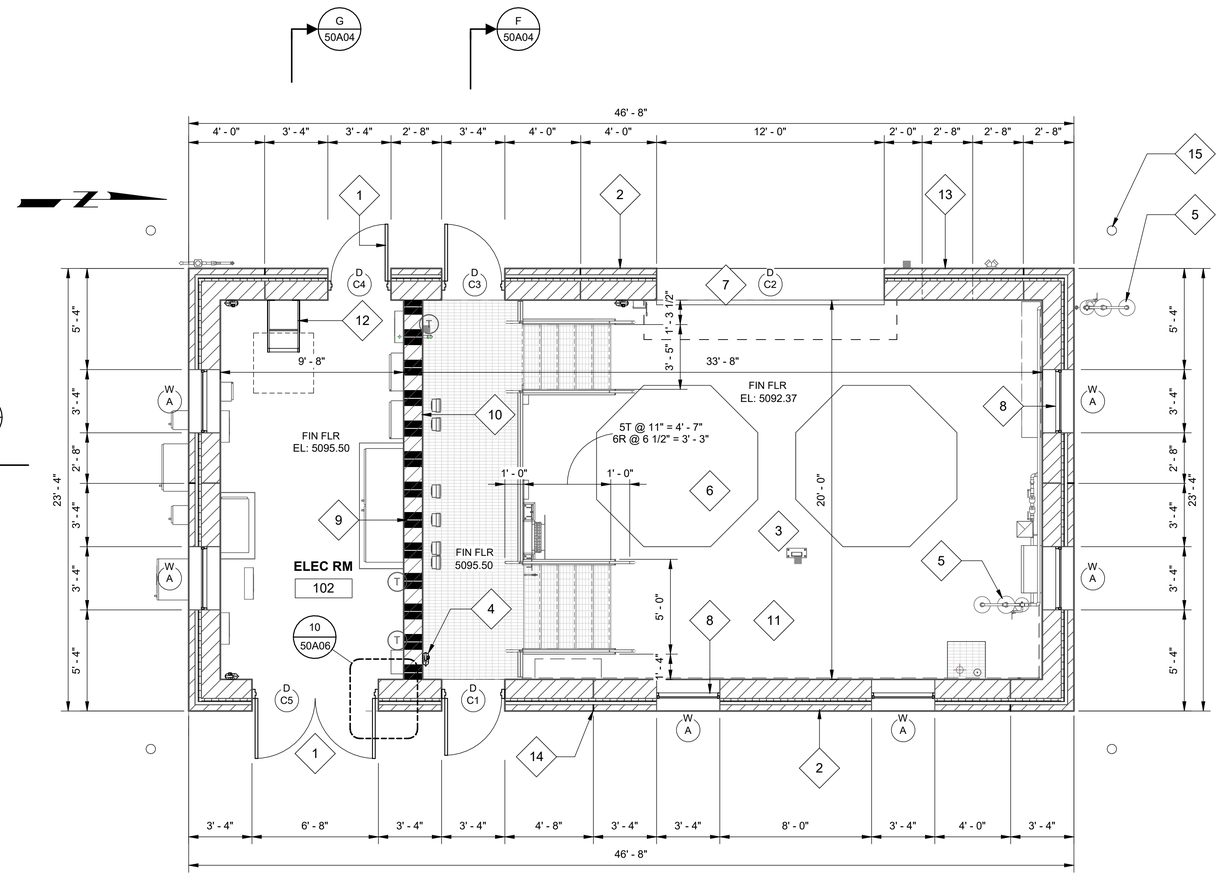

B FLOOR PLAN

0 2' 4' 8'

SCALE: 1/4" = 1'-0"

FLOOR PLAN KEY NOTES

#	
1	HM DOOR AND FRAME, TYP., RE:4&10/50A06
2	4" CMU VENEER ON AIRSPACE ON CONTINUOUS INSULATION (R-14) ON MEMBRANE AIR BARRIER ON 12" CMU WALL, RE: STRUCT, TYP.
3	CONC SLAB, RE: STRUCT., TYP.
4	FIRE EXTINGUISHER AND BRACKET, TYP.
5	EMERGENCY SHOWER AND EYEWASH, RE: MECH
6	CONC PAD BELOW TANKS, COORD WITH PROCESS AND STRUCT, TYP.
7	COILING DOOR, RE:7&8/50A06
8	ALUM WINDOW, TYP., RE:3&11/50A06
9	12" CMU WALL, RE: STRUCT
10	2 HR FIRE BARRIER: COMPRISED OF 12" CMU, WITH 3.2" MIN. FINISHED THICKNESS FACE-TO-FACE PER IBC TABLE 721.1(2), UNGROUTED CORES FILLED WITH EXPANDED SLAG OR PUMICE. FINISH TIGHT TO UNDERSIDE OF CONCRETE ROOF STRUCTURE AND FIRESTOP WITH A UL LISTED ASSEMBLY, TYP. RE: STRUCT
11	PROVIDE AUTOMATIC SPRINKLER SYSTEM THROUGHOUT HAZARDOUS OCCUPANCY, RE: STRUCT
12	METAL LADDER TO ROOF ACCESS HATCH ABOVE, RE:6&7/50A07
13	CHEMICAL FILL STATION DOOR, RE: 2/50A07
14	MOVEMENT JOINT, RE:9/50A06, TYP.
15	BOLLARD, RE: CIVIL, TYP.

REV	DATE	BY	DESCRIPTION
			BID SET

DESIGNED SBA
DRAWN CC
CHECKED PB
DATE MAY 2026

STATE OF COLORADO — PATRICK M. BRENNAN 400493 04/30/26 — LICENSED ARCHITECT

carollo®

THORNTON WATER PROJECT

CITY OF THORNTON-THORNTON WATER PROJECT
CHEMICAL BUILDING AND PRV VAULTS
ARCHITECTURE
CHEMICAL BUILDING
UPPER PLAN

VERIFY SCALES
BAR IS ONE INCH ON ORIGINAL DRAWING
0 1"
IF NOT ONE INCH ON THIS SHEET, ADJUST SCALES ACCORDINGLY

JOB NO. 204403
DRAWING NO. 50A02
SHEET NO. 77 OF 168

PLOT DATE: 5/4/2026 9:34:22 AM

FILE NAME: c:\pw_working\carollo_200000\d0583912\204403_50A0601_v24.rvt

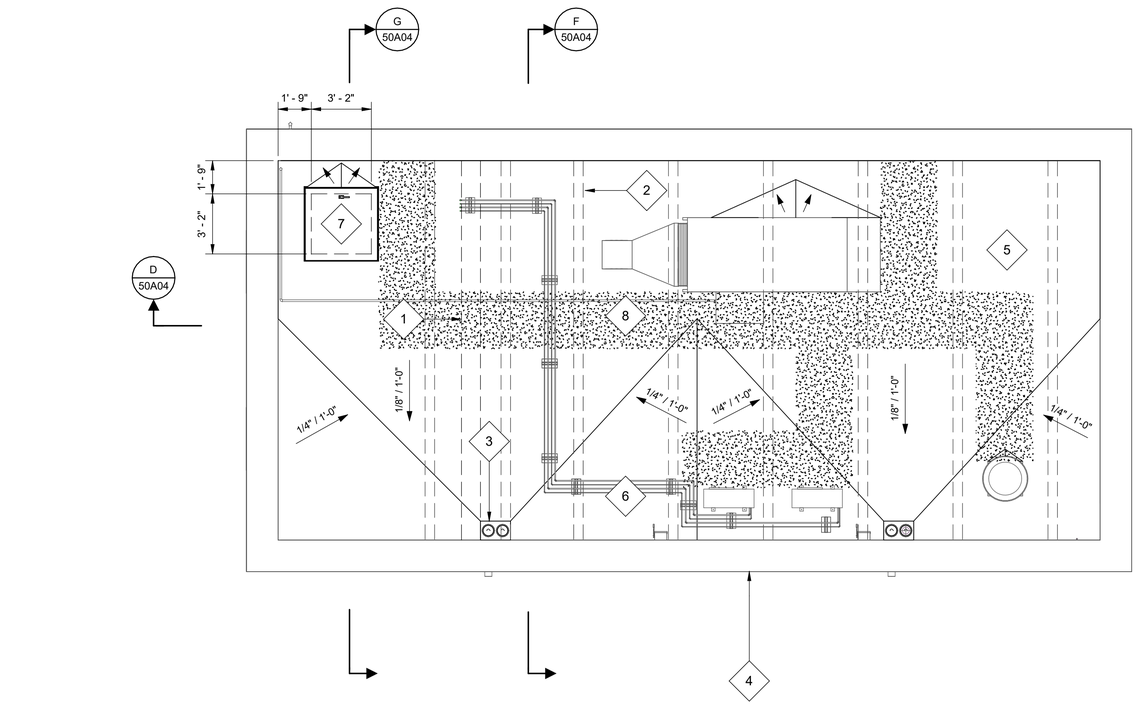

C ROOF PLAN

0 2' 4' 8'

SCALE: 1/4" = 1'-0"

ROOF PLAN KEY NOTES

#	
1	LINE OF CMU WALL BELOW, RE: STRUCT
2	LINES OF STRUCTURE BELOW, RE: STRUCT
3	ROOF DRAIN AND OVERFLOW, RE:6/50A06
4	PREFINISHED GALV METAL COPING, RE:5/50A06, TYP.
5	MEMBRANE ROOFING ON COVER BOARD ON RIGID INSULATION (R-30), TYP.
6	TAPERED INSULATION TO PROVIDE 1/4" PER 1'-0" BACK SLOPE TO ROOF DRAINS, TYP.
7	ACCESS HATCH, 3'- 0" x 3'- 0" W/LADDER-UP SAFETY POST, TYP., RE:7/50A07
8	AREA OF FLEXIBLE WALKWAY, SHOWN SHADED, TYP.

REV	DATE	BY	DESCRIPTION
			BID SET

DESIGNED SBA
DRAWN CC
CHECKED PB
DATE MAY 2026

STATE OF COLORADO
PATRICK M. BRENNAN
400493
04/30/26
LICENSED ARCHITECT

carollo®

THORNTON WATER PROJECT

CITY OF THORNTON-THORNTON WATER PROJECT
CHEMICAL BUILDING AND PRV VAULTS
ARCHITECTURE
CHEMICAL BUILDING
ROOF PLAN

VERIFY SCALES
BAR IS ONE INCH ON ORIGINAL DRAWING
0 1"
IF NOT ONE INCH ON THIS SHEET, ADJUST SCALES ACCORDINGLY

JOB NO. 204403
DRAWING NO. 50A03
SHEET NO. 78 OF 168

PLOT DATE: 5/4/2026 9:34:24 AM

FILE NAME: c:\pw_working\carollo_200000\d0583912\204403_50A0601_v24.rvt

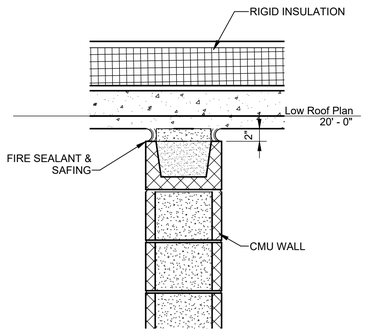

1 T.O. FIRE RATED WALL
1 / 50A04 — SCALE: 1" = 1'-0"

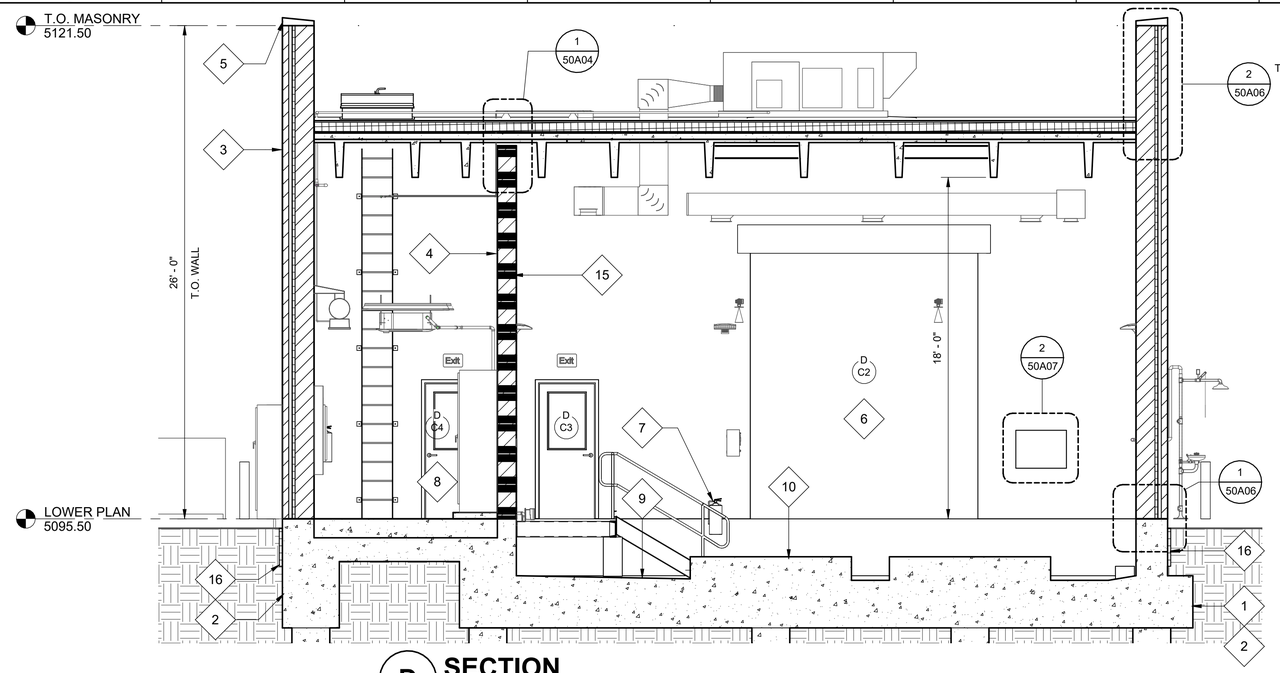

D SECTION
0 2' 4' 8' — SCALE: 1/4" = 1'-0"

#	SECTION KEY NOTES
1	CONCRETE FOUNDATION, RE: STRUCT
2	DAMPROOFING ON CONCRETE WALL W/PROTECTION COURSE, TYP.
3	4" CMU VENEER ON AIRSPACE ON CONTINUOUS INSULATION (R-14) ON MEMBRANE AIR BARRIER ON 12" CMU WALL, RE: STRUCT, TYP.
4	12" CMU WALL, RE: STRUCT
5	PREFINISHED GALV METAL COPING, RE:5/50A06, TYP.
6	COILING DOOR, RE:7&8/50A06
7	FIRE EXTINGUISHER AND BRACKET
8	HM DOOR AND FRAME, TYP., RE:4&10/50A06
9	CONC SLAB, RE: STRUCT., TYP.
10	CONC PAD BELOW TANKS, COORD WITH PROCESS AND STRUCT, TYP.
11	TAPERED INSULATION TO PROVIDE 1/4" PER 1'-0" BACK SLOPE TO ROOF DRAINS, TYP.
12	ALUM WINDOW, TYP., RE:3&11/50A06
13	FRP STAIRS AND LANDINGS, RE: STRUCT., RE: 1&2/50A02
14	MEMBRANE ROOFING ON COVER BOARD ON RIGID INSULATION (R-30), TYP.
15	2 HR FIRE BARRIER: COMPRISED OF 12" CMU, WITH 3.2" MIN. FINISHED THICKNESS FACE-TO-FACE PER IBC TABLE 721.1(2), UNGROUTED CORES FILLED WITH EXPANDED SLAG OR PUMICE. FINISH TIGHT TO UNDERSIDE OF CONCRETE ROOF STRUCTURE AND FIRESTOP WITH A UL LISTED ASSEMBLY, TYP. RE: STRUCT
16	BELOW GRADE INSULATION, R-15 FOR 24" BELOW, TYP.
17	ACCESS HATCH, 3'- 0" x 3'- 0" W/LADDER-UP SAFETY POST, TYP., RE:7/50A07

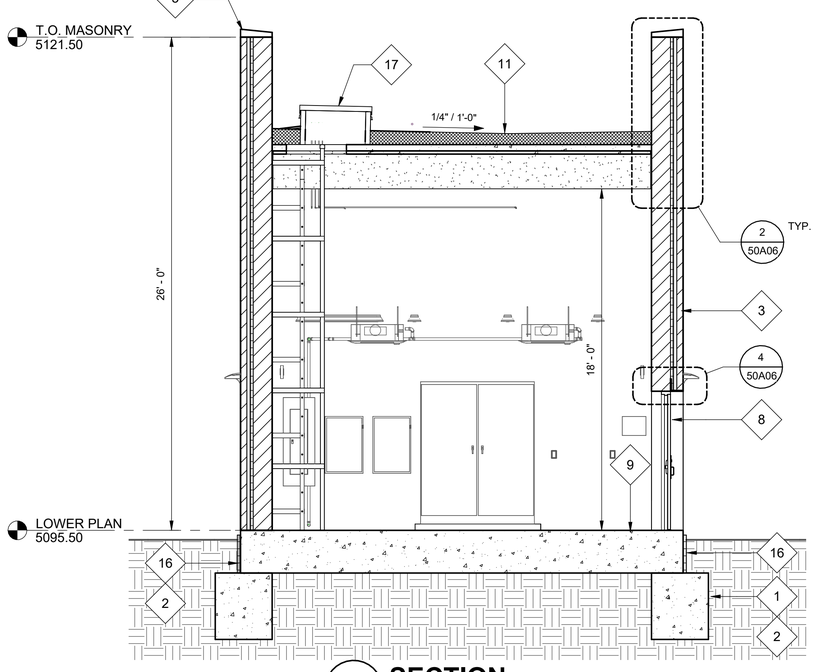

G SECTION
0 2' 4' 8' — SCALE: 1/4" = 1'-0"

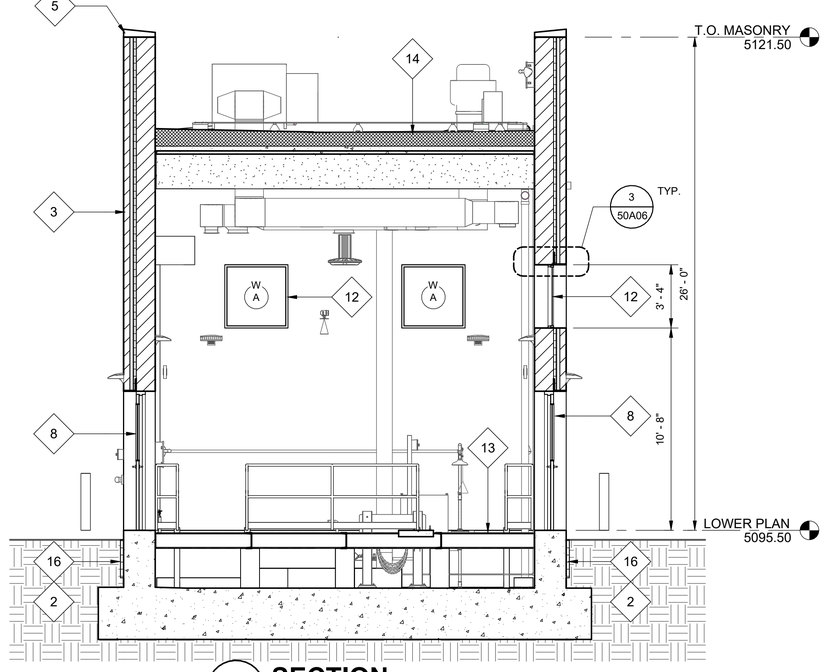

F SECTION
0 2' 4' 8' — SCALE: 1/4" = 1'-0"

REV	DATE	BY	DESCRIPTION
			BID SET

DESIGNED SBA
DRAWN CC
CHECKED PB
DATE MAY 2026

STATE OF COLORADO — CHRISTOPHER M. BRENNAN — 400493 — 04/30/26 — LICENSED ARCHITECT

carollo®

THORNTON WATER PROJECT

CITY OF THORNTON-THORNTON WATER PROJECT
CHEMICAL BUILDING AND PRV VAULTS
ARCHITECTURE
CHEMICAL BUILDING
BUILDING SECTIONS

VERIFY SCALES
BAR IS ONE INCH ON ORIGINAL DRAWING
0 1"
IF NOT ONE INCH ON THIS SHEET, ADJUST SCALES ACCORDINGLY

JOB NO. 204403
DRAWING NO. 50A04
SHEET NO. 79 OF 168

PLOT DATE: 5/4/2026 9:34:26 AM

FILE NAME: c:\pw_working\carollo_200000\d0583912\204403_50A0601_v24.rvt

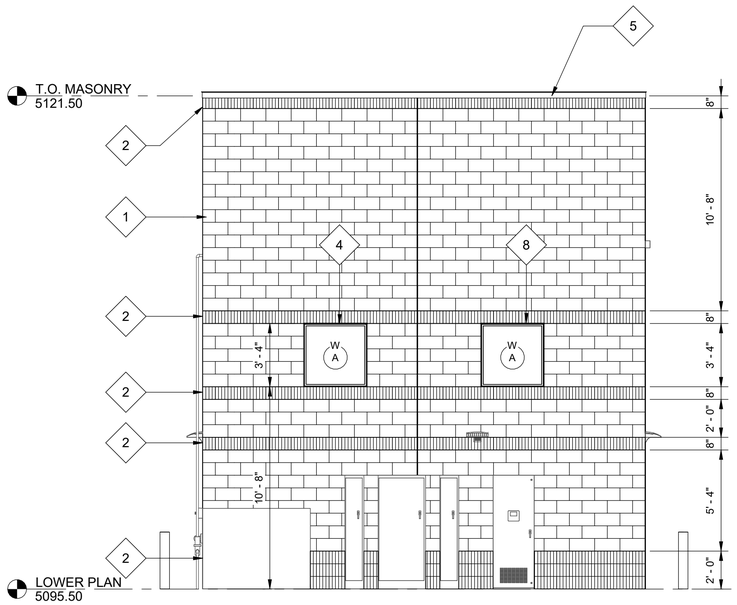

4 SOUTH ELEVATION

0 2' 4' 8'

SCALE: 1/4" = 1'-0"

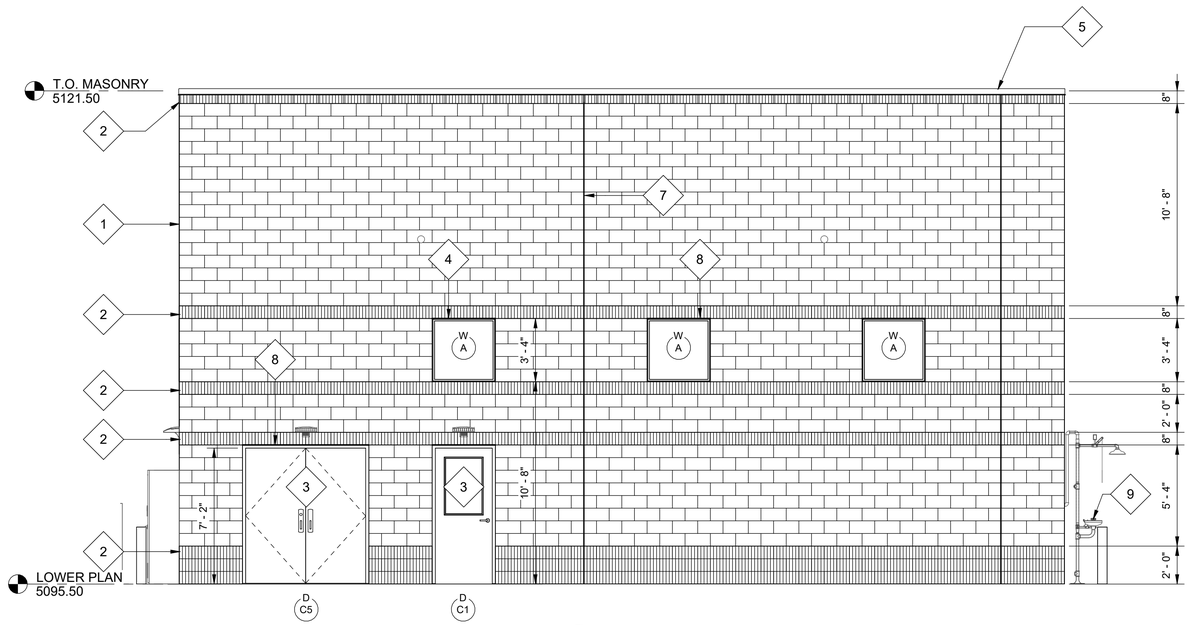

2 EAST ELEVATION

0 2' 4' 8'

SCALE: 1/4" = 1'-0"

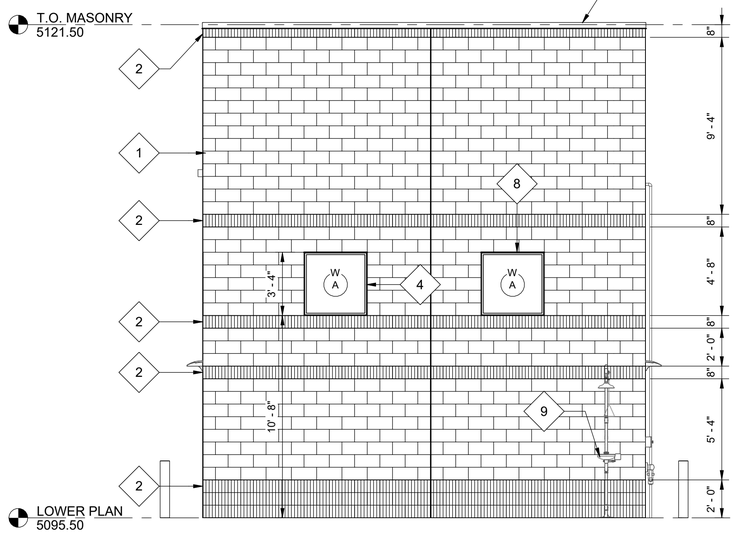

3 NORTH ELEVATION

0 2' 4' 8'

SCALE: 1/4" = 1'-0"

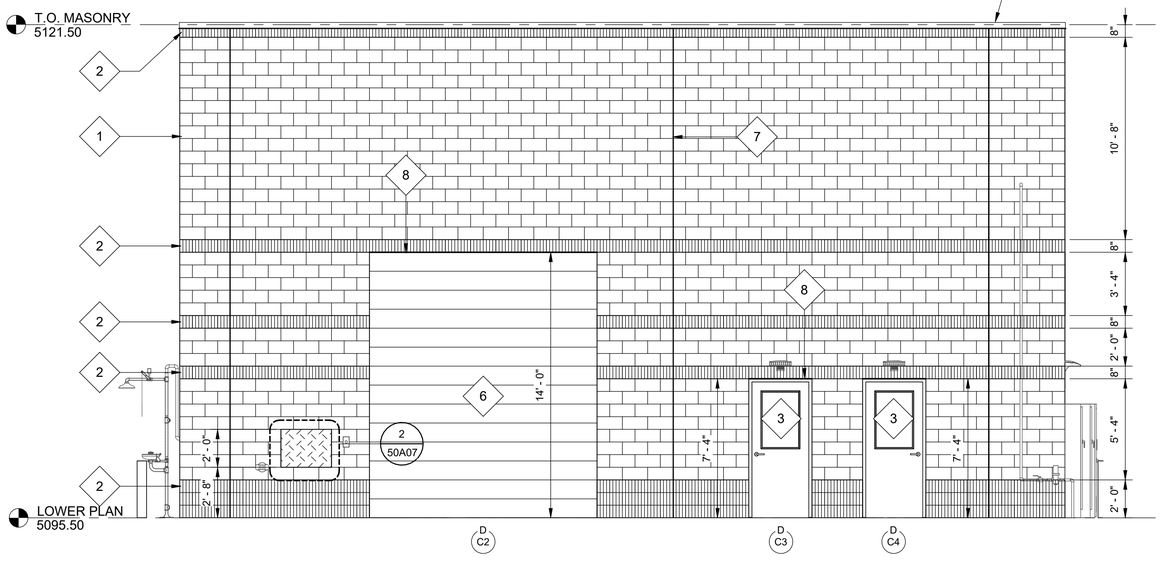

1 WEST ELEVATION

0 2' 4' 8'

SCALE: 1/4" = 1'-0"

ELEVATION KEY NOTES

1. CMU VENEER, COLOR 'A' WITH WATER REPELLENT, TYP.
2. CMU VENEER, COLOR 'B' WITH WATER REPELLENT, TYP.
3. HM DOOR AND FRAME, PAINT, RE:4&10/50A06
4. ALUM WINDOWS, RE:3&11/50A06, TYP.
5. PREFINISHED GALV METAL COPING, RE:5/50A06, TYP.
6. COILING DOOR, RE:7&8/50A06
7. MOVEMENT JOINT, RE:9/50A06, TYP.
8. GALV STEEL LINTEL, PAINT, RE: STRUCT.
9. EMERGENCY SHOWER AND EYEWASH, RE: MECH

REV	DATE	BY	DESCRIPTION
			BID SET

DESIGNED SBA
DRAWN CC
CHECKED PB
DATE MAY 2026

STATE OF COLORADO — CHRISTOPHER M. BRENNAN — 400493 — 04/30/26 — LICENSED ARCHITECT

carollo

THORNTON WATER PROJECT

CITY OF THORNTON-THORNTON WATER PROJECT
CHEMICAL BUILDING AND PRV VAULTS
ARCHITECTURE
CHEMICAL BUILDING
BUILDING ELEVATIONS

VERIFY SCALES
BAR IS ONE INCH ON ORIGINAL DRAWING
0 1"
IF NOT ONE INCH ON THIS SHEET, ADJUST SCALES ACCORDINGLY

JOB NO. 204403
DRAWING NO. 50A05
SHEET NO. 80 OF 168

PLOT DATE: 5/4/2026 9:34:33 AM

FILE NAME: c:\pw_working\carollo_200000\d0583912\204403_50A0601_v24.rvt

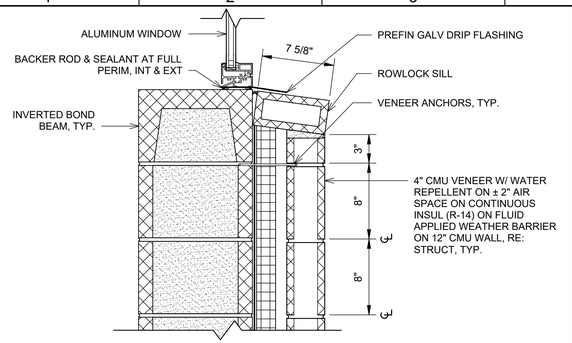

11 TYP. WINDOW SILL

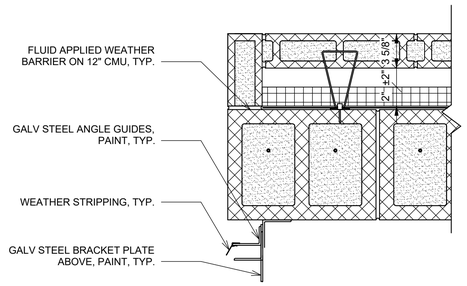

8 OVERHEAD DOOR JAMB

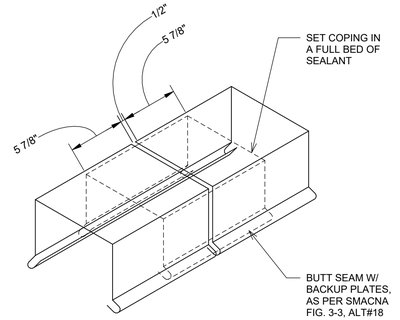

5 TYP. COPING

NOT TO SCALE

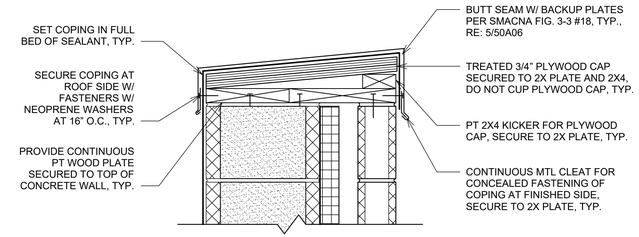

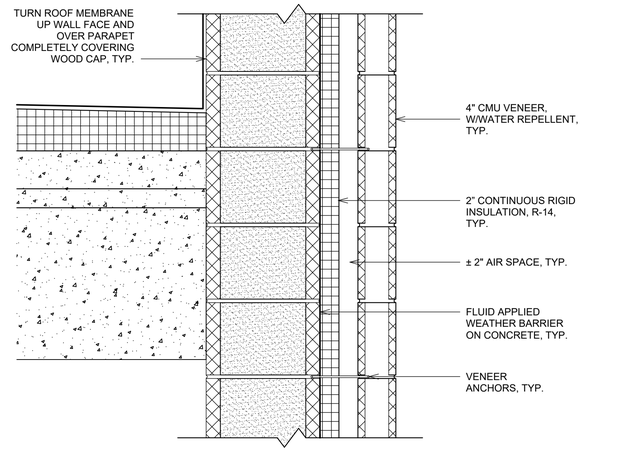

2 TYP. PARAPET

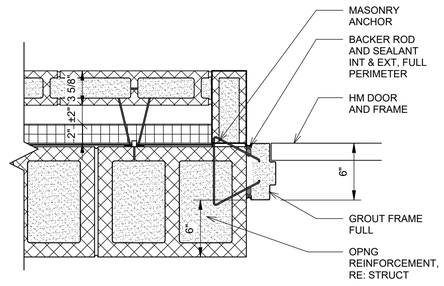

10 TYP. DOOR JAMB

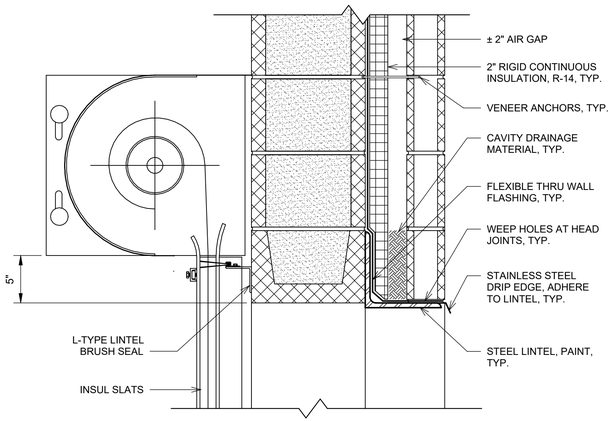

7 OVERHEAD DOOR HEAD

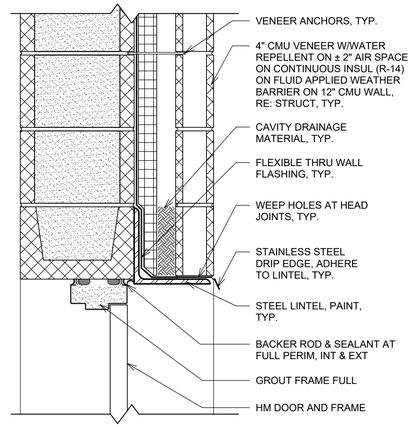

4 TYP. DOOR HEAD

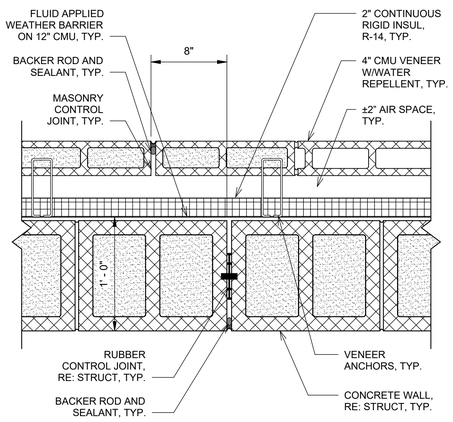

9 TYP. MOVEMENT JOINT

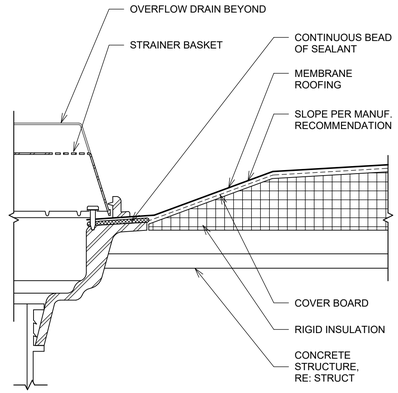

6 ROOF DRAIN

NOT TO SCALE

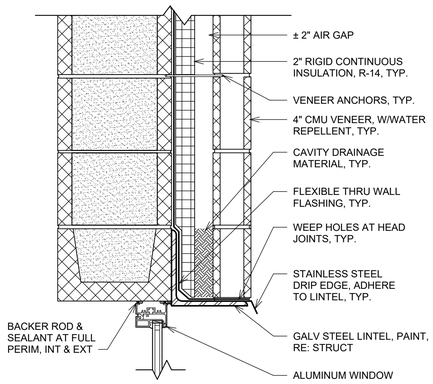

3 TYP. WINDOW HEAD

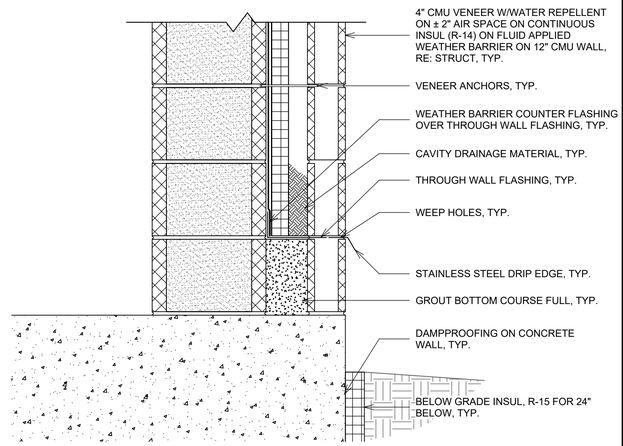

1 TYP. WALL BASE

0 6" 1'-0" 1'-6"

SCALE: 1 1/2" = 1'-0"

REV	DATE	BY	DESCRIPTION
			BID SET

DESIGNED SBA
DRAWN CC
CHECKED PB
DATE MAY 2026

STATE OF COLORADO — PATRICK M. BRENNAN — 400493 — 04/30/26 — LICENSED ARCHITECT

carollo®

THORNTON WATER PROJECT

CITY OF THORNTON-THORNTON WATER PROJECT
CHEMICAL BUILDING AND PRV VAULTS
ARCHITECTURE
CHEMICAL BUILDING
WALL SECTIONS AND DETAILS

VERIFY SCALES
BAR IS ONE INCH ON ORIGINAL DRAWING
0 1"
IF NOT ONE INCH ON THIS SHEET, ADJUST SCALES ACCORDINGLY

JOB NO. 204403
DRAWING NO. 50A06
SHEET NO. 81 OF 168

PLOT DATE: 5/4/2026 9:34:34 AM

FILE NAME: c:\pw_working\carollo_200000\d0583912\204403_50A0601_v24.rvt

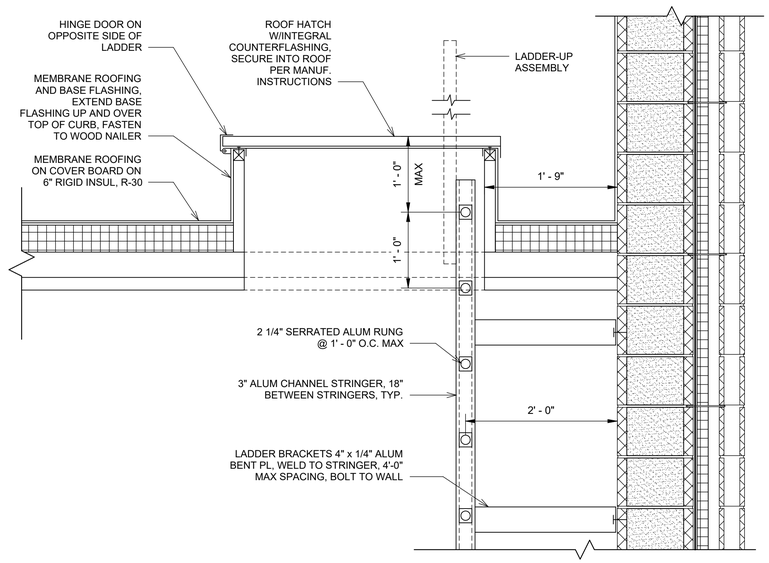

7 ROOF ACCESS HATCH

0 6" 1' 2'

SCALE: 1" = 1'-0"

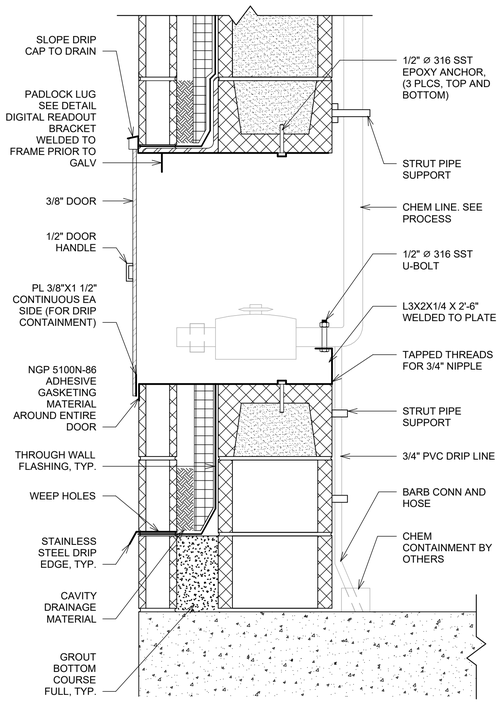

5 FILL STATION SECTION

0 6" 1'-0" 1'-6"

SCALE: 1 1/2" = 1'-0"

DOOR SCHEDULE

DOOR NO.	DOOR SIZE HEIGHT	THICKNESS	WIDTH	DOOR PANEL TYPE	MATERIAL	FINISH	DOOR FRAME MATERIAL	TYPE	FINISH	HARDWARE	FIRE RATING	COMMENTS	DETAIL HEAD	JAMB
C1	7' - 2"	0' - 1 3/4"	3' - 0"	A	HM	PAINT	HM	1	PAINT	02	N/A		3/50A06	5/50A06
C2	14' - 0"	0' - 3"	12' - 0"	B	HM	FACT FIN	-	-	-	MANUF	N/A		7/50A06	9/50A06
C3	7' - 2"	0' - 1 3/4"	3' - 0"	A	HM	PAINT	HM	1	PAINT	02	N/A		3/50A06	5/50A06
C4	7' - 2"	0' - 1 3/4"	3' - 0"	A	HM	PAINT	HM	1	PAINT	02	N/A		3/50A06	5/50A06
C5	7' - 2"	0' - 1 3/4"	6' - 4"	C	HM	PAINT	HM	2	PAINT	03	N/A		3/50A06	5/50A06

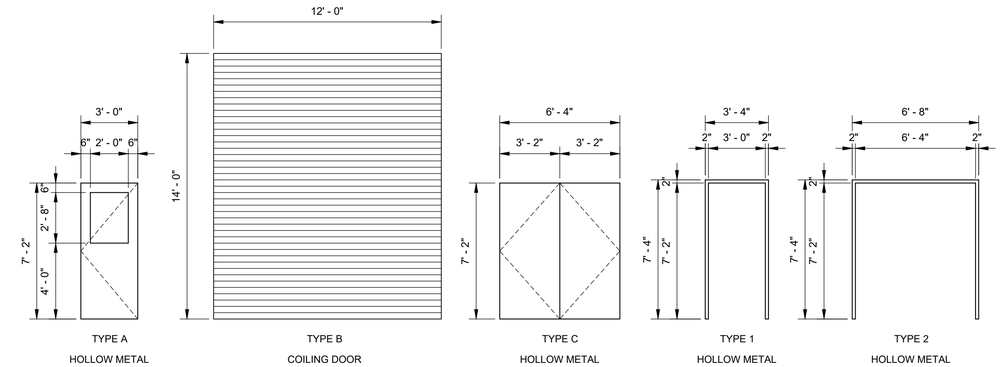

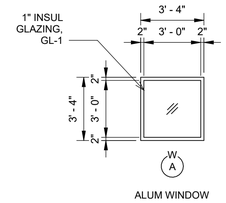

ALUM WINDOW

1 DOOR & WINDOW ELEVATIONS

0 2' 4' 8'

SCALE: 1/4" = 1'-0"

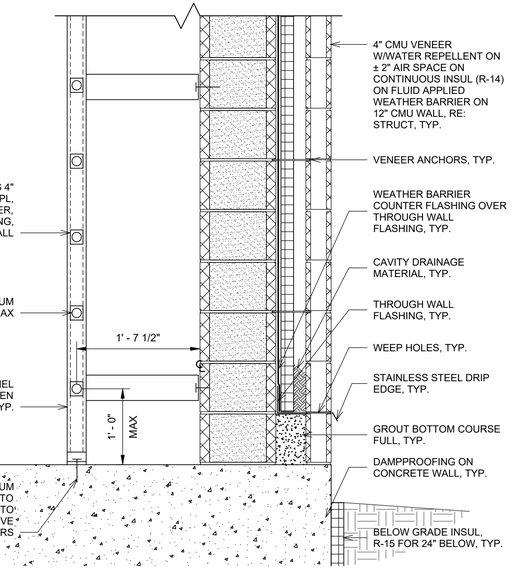

6 LADDER BASE

0 6" 1' 2'

SCALE: 1" = 1'-0"

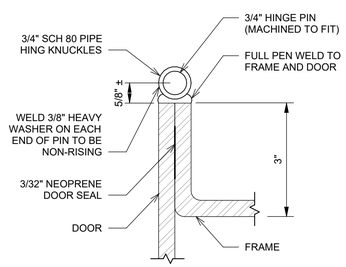

4 FILL STATION HINGE

0 6" 1'-0" 1'-6"

SCALE: 1 1/2" = 1'-0"

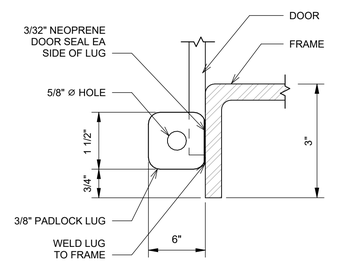

3 FILL STATION LATCH

0 6" 1'-0" 1'-6"

SCALE: 1 1/2" = 1'-0"

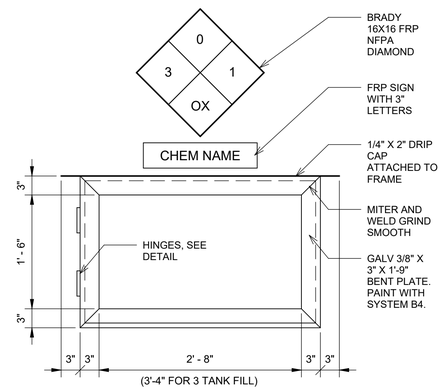

(3'-4" FOR 3 TANK FILL)

2 FILL STATION ELEVATION

0 6" 1' 2'

SCALE: 1" = 1'-0"

REV	DATE	BY	DESCRIPTION
			BID SET

DESIGNED SBA
DRAWN CC
CHECKED PB
DATE MAY 2026

STATE OF COLORADO — MATTHEW M. BRENNAN — 400493 — 04/30/26 — LICENSED ARCHITECT

carollo

THORNTON WATER PROJECT

CITY OF THORNTON-THORNTON WATER PROJECT
CHEMICAL BUILDING AND PRV VAULTS
ARCHITECTURE
CHEMICAL BUILDING
DETAILS, DOOR SCHEDULE, AND ELEVATIONS

VERIFY SCALES
BAR IS ONE INCH ON ORIGINAL DRAWING
0 1"
IF NOT ONE INCH ON THIS SHEET, ADJUST SCALES ACCORDINGLY

JOB NO. 204403
DRAWING NO. 50A07
SHEET NO. 82 OF 168

PLOT DATE: 5/4/2026 9:34:36 AM

FILE NAME: c:\pw_working\carollo_200000\d0583912\204403_50A0601_v24.rvt

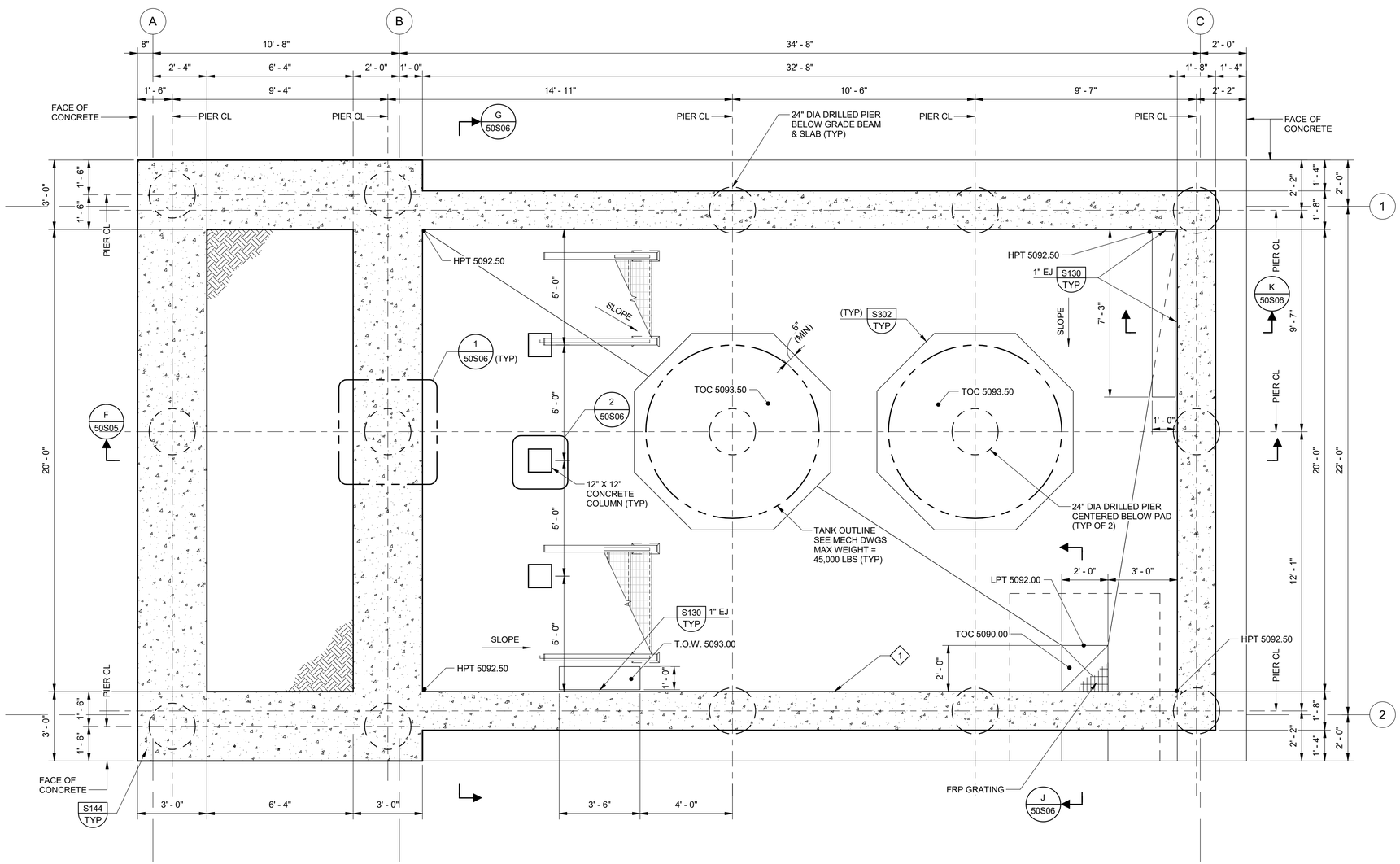

A PLAN

SCALE: 3/8" = 1'-0"

STRUCTURE DESIGN INFORMATION:

CHEMICAL BUILDING

1. BUILDING CODE:
   a. 2024 INTERNATIONAL BUILDING CODE (IBC)
   b. CITY OF THORNTON AMENDMENTS
2. STRUCTURE USE: WATER TREATMENT
3. RISK CATEGORY: IV
4. ROOF DEAD LOADS:
   a. TOPPING SLAB + ROOFING: 70PSF
   b. COLLATERAL LOADS FROM PERMANENTLY ATTACHED CONSTRUCTION : 20PSF
5. LIVE LOADS: (SEE PLANS FOR ADDL INFO.)
   a. FLOOR: UNIFORM: 200 PSF
   b. ROOF: SURFACE LOAD, UNIFORM: 20 PSF
   c. EQUIPMENT: SEE PLANS, AND SECTIONS.
6. SNOW LOAD:
   a. GROUND SNOW LOAD, Pg = 78 PSF
   b. SNOW LOAD IMPORTANCE FACTOR, Is = 1.2
   c. ROOF THERMAL FACTOR, Ct = 1.0
   d. ROOF EXPOSURE FACTOR, Ce = 1.0
   e. ROOF SNOW LOAD, Pf: 60.1 PSF FLAT
   f. DRIFT LOADS: SEE PLANS
7. WIND LOAD:
   a. BASIC WIND SPEED, V = 117
   b. ALLOWABLE STRESS DESIGN WIND SPEED, Vasd = 91
   c. EXPOSURE CATEGORY: C
   d. TOPOGRAPHIC FACTOR, Kzt = 1.0
   e. PRESSURE COEFFICIENTS:
      1. INTERNAL , GCpi = 0.55
      2. COMP & CLADDING, GCp = SEE PLANS
8. SEISMIC:

		0.2 SECOND	*1.0 SECOND
a.	SITE CLASS: C.		
b.	MAPPED SPECTRAL RESPONSE ACCELERATIONS :	Ss = 0.18 g	S1 = 0.043 g
c.	MAXIMUM CONSIDERED ACCELERATIONS:	Sms = 0.23 g	Sm1 = 0.096 g
d.	DESIGN SPECTRAL RESPONSE ACCELERATIONS: (* 5% DAMPED)	Sds = 0.15 g	Sd1 = 0.064 g

   e. SEISMIC IMPORTANCE FACTOR: Ie = 1.50.
   f. SEISMIC DESIGN CATEGORY: A
   g. SEISMIC FORCE RESISTING SYSTEM: ORDINARY REINFORCED MASONRY SHEAR WALLS.
   h. SYSTEM RESPONSE MODIFICATION COEFFICIENT: R = 2
   i. SEISMIC RESPONSE COEFFICIENT: Cs = 0.13
   j. ANALYSIS PROCEDURE: EQUIVALENT LATERAL FORCE
   k. DESIGN BASE SHEAR, V: 308.5 KIPS.
9. FOUNDATION:
   a. TYPE: DRILLED PIER
   b. FROST DEPTH: 36 INCHES. (CITY OF THORNTON AMENDMENTS).
   c. MINIMUM REQUIRED SOIL BEARING CAPACITY:
      1. ALLOWABLE END BEARING PRESSURE: 40,000 PSF
      2. SKIN (SHAFT) FRICTION VALUE: 3,000 PSF
      3. MINIMUM DIAMETER: 18 INCHES
      4. MINIMUM DL: 43 X DIA
   d. LATERAL EARTH PRESSURE (UNO)

	ABOVE GWT	BELOW GWT
ACTIVE (PSF/FT)	42	83
AT-REST (PSF/FT)	63	94
PASSIVE (PSF/FT)	375	250

GENERAL NOTES:

1. SEE DRAWING 00GS01 FOR GENERAL STRUCTURAL NOTES.

KEY NOTES:

1. COAT THE CHEMICAL CONTAINMENT AREA AS SPECIFIED IN 09_96_01 HIGH PERFORMANCE COATING.

REV	DATE	BY	DESCRIPTION
			BID SET

DESIGNED NV
DRAWN DG
CHECKED MAK
DATE APRIL 2026

COLORADO REGISTERED 34300 MARK ALAN KELLEY PROFESSIONAL ENGINEER

carollo®

THORNTON WATER PROJECT

CITY OF THORNTON-THORNTON WATER PROJECT

CHEMICAL BUILDING AND PRV VAULTS

STRUCTURAL

CHEMICAL BUILDING FOUNDATION PLAN

VERIFY SCALES
BAR IS ONE INCH ON ORIGINAL DRAWING
0 1"
IF NOT ONE INCH ON THIS SHEET, ADJUST SCALES ACCORDINGLY

JOB NO. 204403
DRAWING NO. 50S01
SHEET NO. 83 OF 168

PLOT DATE: 4/1/2026 11:43:51 AM

FILE NAME: R:\d0583920\204403_50S0801.rvt

GENERAL NOTES:

1. FOR GENERAL STRUCTURAL NOTES SEE DRAWING 00GS01.
2. COORDINATE WITH EQUIPMENT MANUFACTURER FOR OPENING, PAD LOCATION AND SIZE. PROVIDE MINIMUM EDGE DISTANCE OF 6" OR 8" x DIA OF ANCHOR BOLT.
3. COORDINATE EQUIPMENT LOCATION WITH ELECTRICAL DRAWINGS.
4. COORDINATE WALL AND FLOOR PENETRATION DIMENSIONS WITH ARCHITECTURAL, HVAC AND ELECTRICAL DRAWINGS. PROVIDE ADDITIONAL REINFORCEMENT AROUND PENETRATIONS PER S180/TYP.
5. FLOOR LIVE LOAD: 200 PSF
   ROOF LIVE LOAD: 20 PSF
6. SCJ = SLAB CONSTRUCTION JOINT. SEE S110/TYP.
   MCJ = MASONRY CONTROL JOINT. SEE S430/TYP.
7. FULLY GROUT ALL CMU WALLS. SEE WALL SECTIONS FOR REINFORCING AND DETAILS S400/TYP, S402/TYP, S410/TYP, S412/TYP, S430/TYP AND S455/TYP.
8. CONTRACTOR TO SUBMIT THE CALCULATIONS AND CONNECTION DETAILS FOR FRP PLATFORM. COORDINATE THE FRP BEAM CONNECTION TO FRP COLUMN WITH THE FRP MFR.
9. REFER TO ARCHITECTURAL DRAWINGS FOR DOOR OPENING DIMENSIONS.

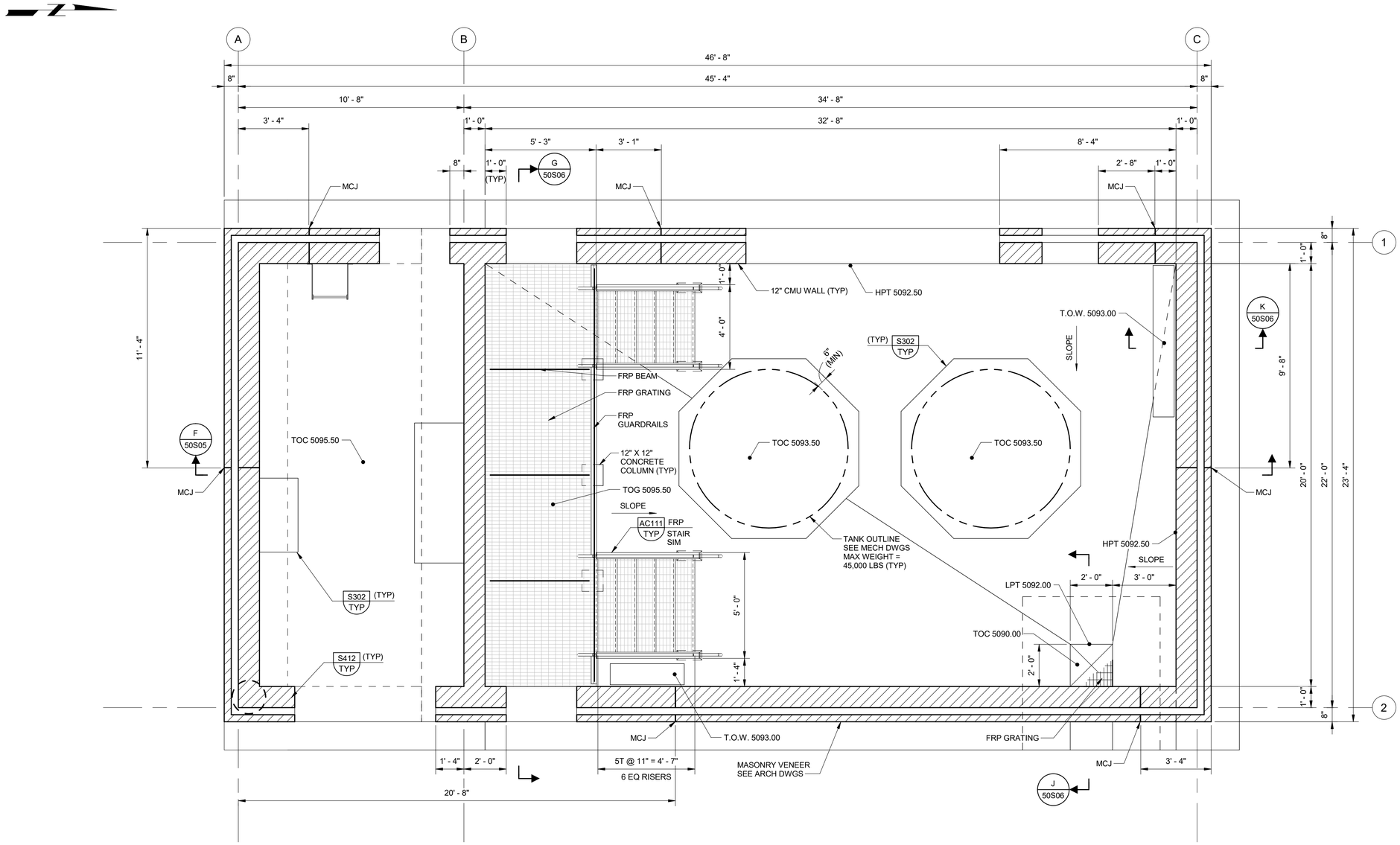

B PLAN

0 2' 4' 6'
SCALE: 3/8" = 1'-0"

REV	DATE	BY	DESCRIPTION
			BID SET

DESIGNED NV
DRAWN DG
CHECKED MAK
DATE APRIL 2026

COLORADO REGISTERED PROFESSIONAL ENGINEER — MARK ALAN KELLER — 34300

carollo®

THORNTON WATER PROJECT

CITY OF THORNTON-THORNTON WATER PROJECT
CHEMICAL BUILDING AND PRV VAULTS
STRUCTURAL
CHEMICAL BUILDING
FLOOR PLAN

VERIFY SCALES
BAR IS ONE INCH ON ORIGINAL DRAWING
0 1"
IF NOT ONE INCH ON THIS SHEET, ADJUST SCALES ACCORDINGLY

JOB NO. 204403
DRAWING NO. 50S02
SHEET NO. 84 OF 168

PLOT DATE: 4/1/2026 11:43:51 AM

FILE NAME: R:\d0583920\204403_50S0801.rvt

GENERAL NOTES:

1. SEE DRAWING 00GS01 FOR GENERAL STRUCTURAL NOTES.

KEY NOTES:

1. COORDINATE EXACT LOCATION WITH TANK MANUFACTURER.
2. 4" CLASS A NORMAL WEIGHT CONCRETE TOPPING SLAB.
3. (3) #5@6" CONTINUOUS CHORD REINFORCING IN THE CONCRETE TOPPING SLAB. LOCATE CENTERLINE OF CHORD REINFORCEMENT GROUP 12" FROM INSIDE FACE OF CMU PARAPET.
4. SEE "ROOF DECK CONNECTION LOADS" TABLE ON THIS SHEET FOR MINIMUM LOADS FOR CONNECTION DESIGN TO PRECAST:
   A. N = FORCE NORMAL TO WALL
   B. V = FORCE PARALLEL TO WALL

ROOF DECK CONNECTION LOADS (STRENGTH LEVEL)			
CONNECTION LOCATION	OUT-OF-PLANE WIND FORCE, Nw (PLF)	OUT-OF-PLANE SEISMIC FORCE, Ns (PLF)	SEISMIC SHEAR FORCE, Vs (PLF)
GRIDS 1 & 2	560	300	3000
GRIDS A & C	560	300	3200

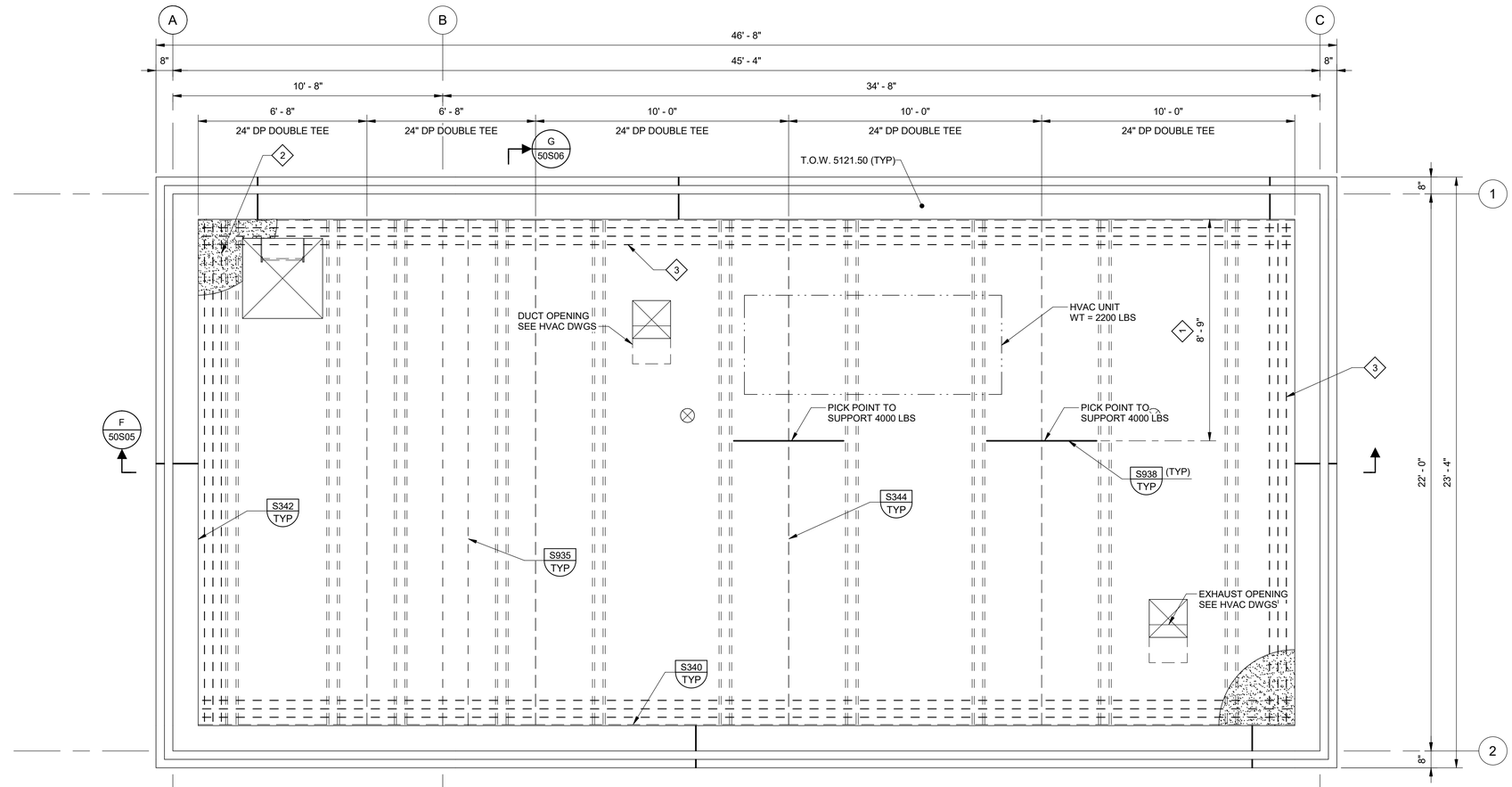

ROOF FRAMING

C PLAN

0 2' 4' 6'

SCALE: 3/8" = 1'-0"

REV	DATE	BY	DESCRIPTION
			BID SET

DESIGNED NV
DRAWN DG
CHECKED MAK
DATE APRIL 2026

COLORADO REGISTERED MARK ALAN KELLER 34300 PROFESSIONAL ENGINEER

CITY OF THORNTON-THORNTON WATER PROJECT

CHEMICAL BUILDING AND PRV VAULTS

STRUCTURAL

CHEMICAL BUILDING
ROOF FRAMING PLAN

VERIFY SCALES
BAR IS ONE INCH ON ORIGINAL DRAWING
0 1"
IF NOT ONE INCH ON THIS SHEET, ADJUST SCALES ACCORDINGLY

JOB NO. 204403
DRAWING NO. 50S03
SHEET NO. 85 OF 168

PLOT DATE: 4/1/2026 11:43:52 AM

FILE NAME: R:\d0583920\204403_50S0801.rvt

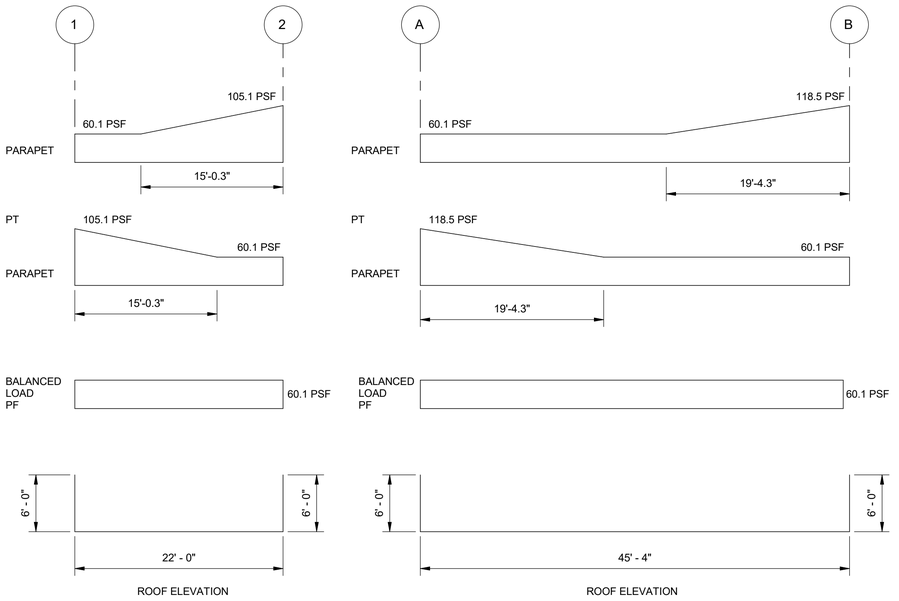

ROOF SNOW DRIFT LOAD DIAGRAM

D PLAN

SCALE: NO SCALE

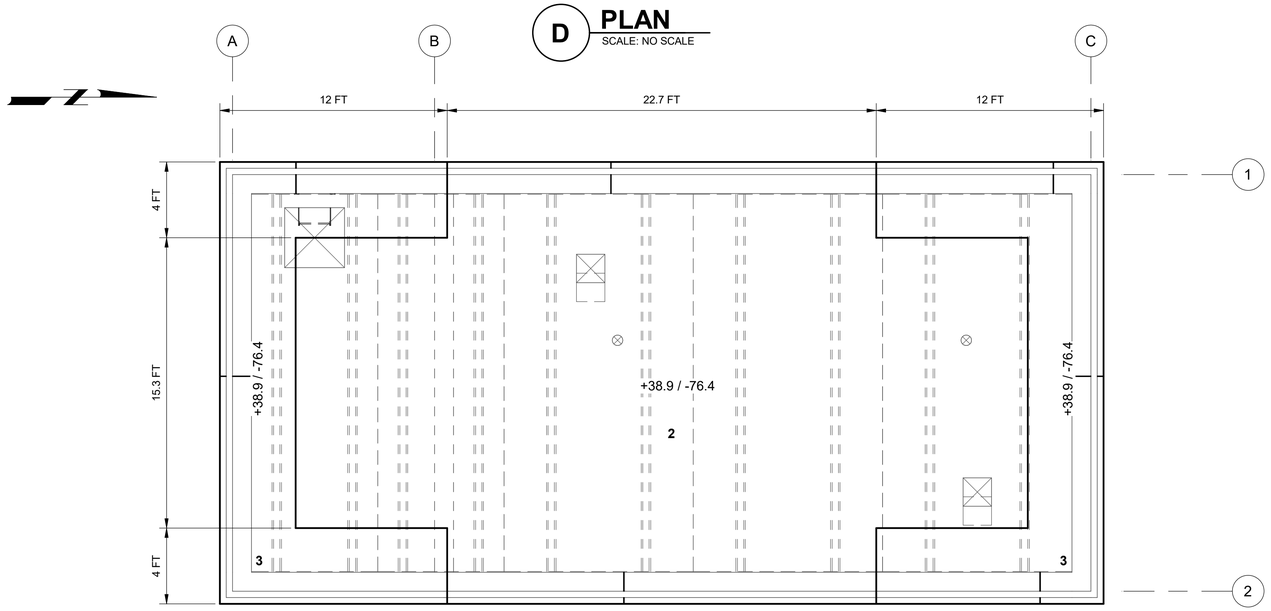

ROOF WIND LOAD DIAGRAM

E PLAN

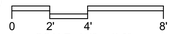

SCALE: 1/4" = 1'-0"

GENERAL NOTES:

1. SEE DRAWING 00GS01 FOR GENERAL STRUCTURAL NOTES.

KEY NOTES:

1. ROOF LOADING - SNOW:
   a. SNOW LOADS SHOWN ARE ULTIMATE LEVEL IN PSF.
   b. PF = FLAT ROOF SNOW LOAD.
   c. PD = DRIFTING SNOW LOAD SURCHARGE.
   d. PT = TOTAL SNOW LOAD (PF + PD).
2. ROOF LOADING - WIND:
   a. WIND PRESSURES SHOWN ARE ULTIMATE LEVEL IN PSF (V = 117 MPH) OR "COMPONENTS AND CLADDING".
   b. POSITIVE (+) VALUE IS DOWNWARD WIND PRESSURE. NEGATIVE (-) VALUE IS UPWARD WIND PRESSURE.

REV	DATE	BY	DESCRIPTION
			BID SET

DESIGNED NV
DRAWN DG
CHECKED MAK
DATE APRIL 2026

COLORADO REGISTERED MARK A. KAELIN 34300 PROFESSIONAL ENGINEER

carollo

THORNTON WATER PROJECT

CITY OF THORNTON-THORNTON WATER PROJECT

CHEMICAL BUILDING AND PRV VAULTS

STRUCTURAL

CHEMICAL BUILDING ROOF LOADING PLANS

VERIFY SCALES
BAR IS ONE INCH ON ORIGINAL DRAWING
0 1"
IF NOT ONE INCH ON THIS SHEET, ADJUST SCALES ACCORDINGLY

JOB NO. 204403
DRAWING NO. 50S04
SHEET NO. 86 OF 168

PLOT DATE: 4/1/2026 11:43:49 AM

FILE NAME: R:\d0583920\204403_50S0801.rvt

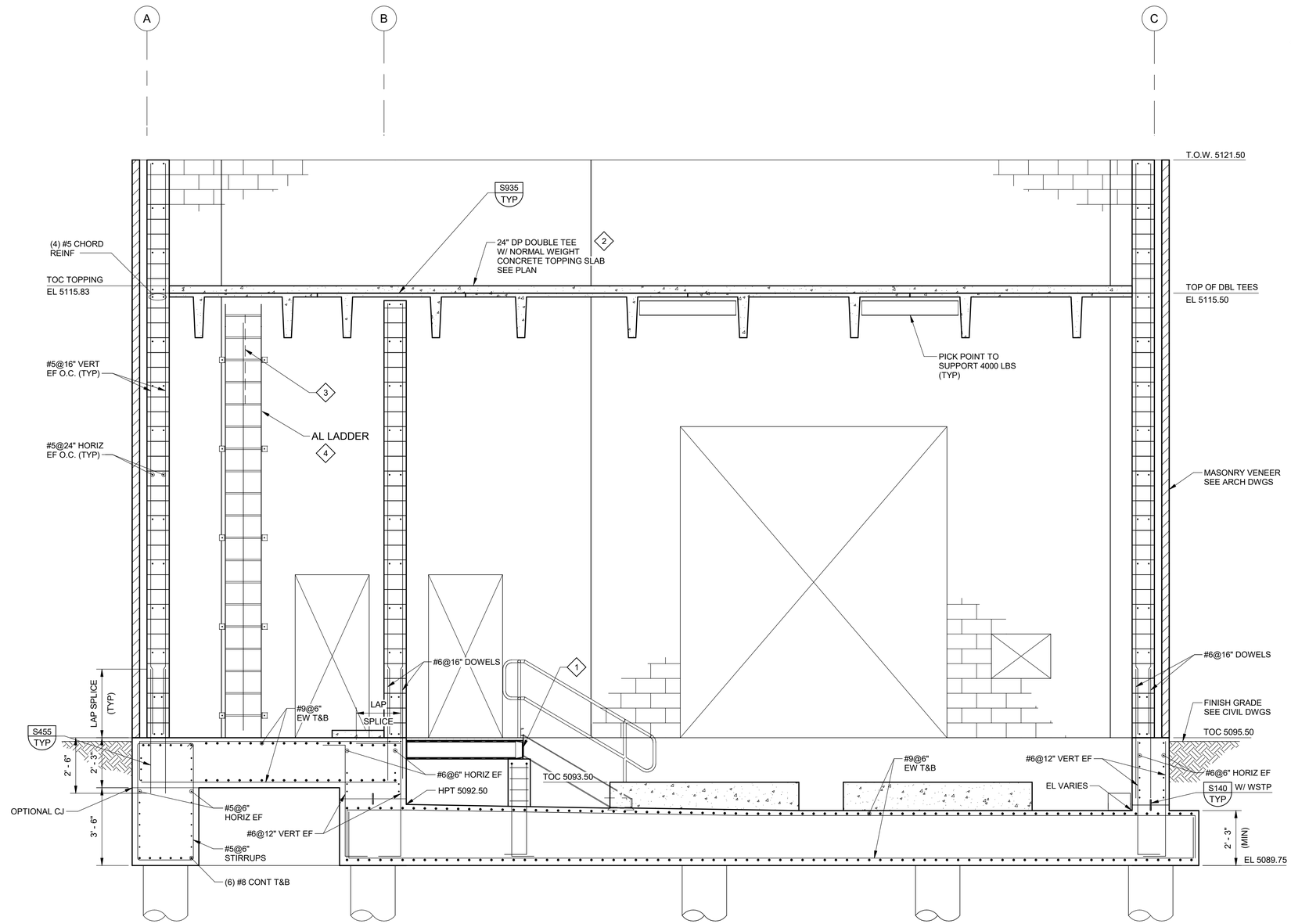

F
50S01
SECTION
0 2' 4' 6'
SCALE: 3/8" = 1'-0"

GENERAL NOTES:

1. SEE DRAWING 00GS01 FOR GENERAL STRUCTURAL NOTES.

KEY NOTES:

1. CONTRACTOR TO COORDINATE THE FRP BEAM CONNECTIONS WITH THE FRP MFR.
2. PROVIDE PRECAST CONCRETE ROOF PANELS PER SPECIFICATION 03_41_41 - PRECAST CONCRETE ROOF AND WALL PANELS.
3. PROVIDE GUIDE RAIL AND LADDER UP SIMILAR TO SAF-T-CLIMB LADDER SYSTEM OR EQUAL. CENTER LADDER ON FLOOR OPENING.
4. REFER TO DETAIL 6 AND 7 ON DWG 50A07 FOR LADDER ATTACHMENT TO WALL.

REV	DATE	BY	DESCRIPTION
			BID SET

DESIGNED NV
DRAWN DG
CHECKED MAK
DATE APRIL 2026

COLORADO REGISTERED PROFESSIONAL ENGINEER
MARK ALAN KELLER
34300
Digitally signed by Mark Alan Keller
Date: 2026.03.05 10:50:04 -06'00'

carollo®

THORNTON WATER PROJECT

CITY OF THORNTON-THORNTON WATER PROJECT
CHEMICAL BUILDING AND PRV VAULTS
STRUCTURAL
CHEMICAL BUILDING
SECTIONS 1

VERIFY SCALES
BAR IS ONE INCH ON ORIGINAL DRAWING
0 1"
IF NOT ONE INCH ON THIS SHEET, ADJUST SCALES ACCORDINGLY

JOB NO. 204403
DRAWING NO. 50S05
SHEET NO. 87 OF 168

PLOT DATE: 4/1/2026 11:43:50 AM

FILE NAME: R:\d0583920\204403_50S0801.rvt

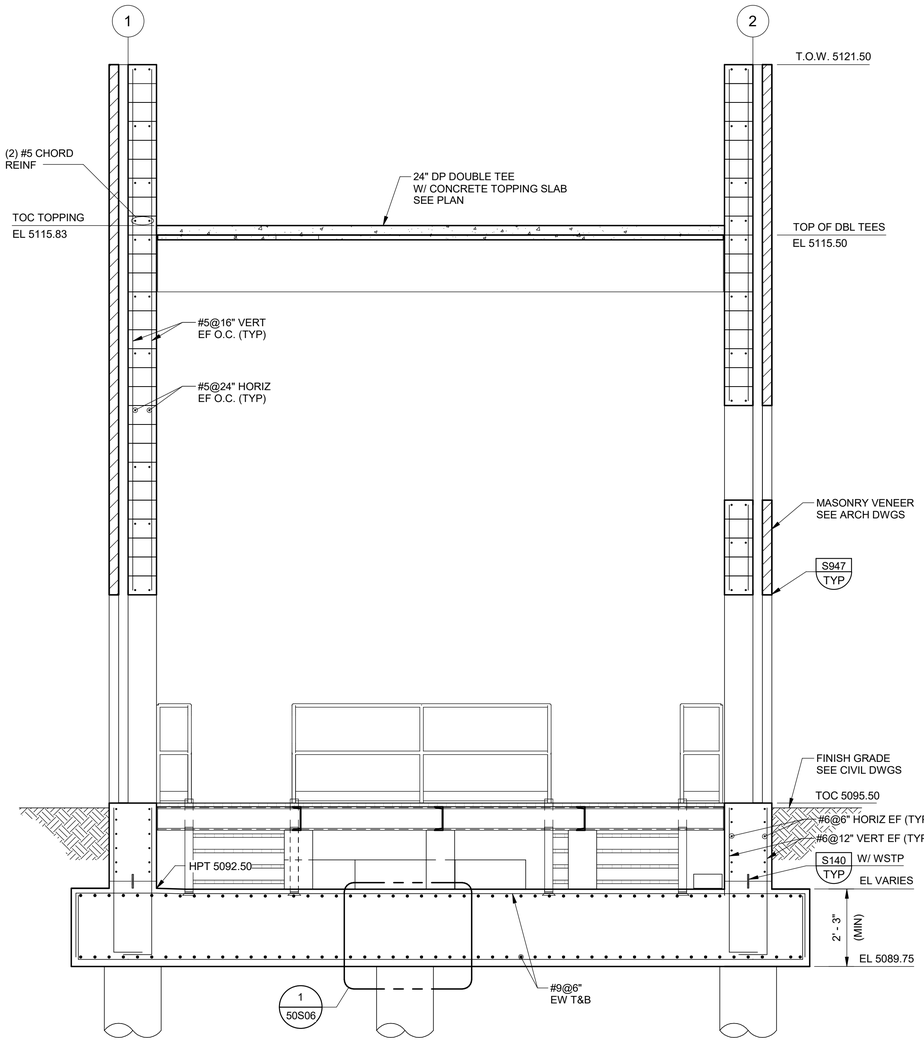

G SECTION
50S01
SCALE: 3/8" = 1'-0"

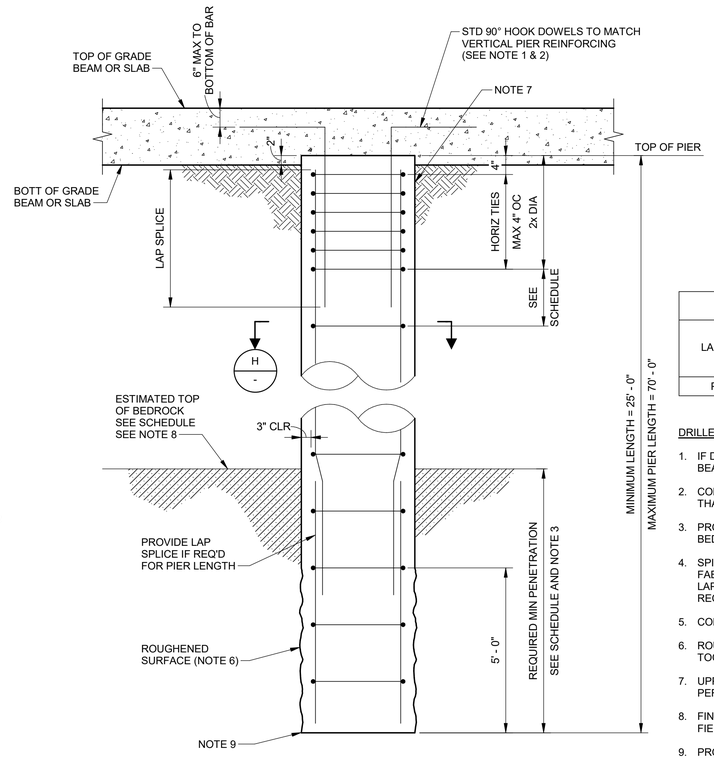

1 DETAIL
50S01
SCALE: NO SCALE

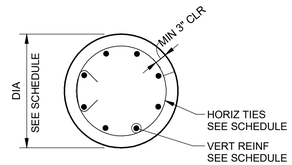

H SECTION
-
SCALE:NO SCALE

GENERAL NOTES:

1. SEE DRAWING 00GS01 FOR GENERAL STRUCTURAL NOTES.

DRILLED PIER SCHEDULE						
LABEL	DIAMETER (FT)	TOP ELEVATION (FT)	MIN PENETRATION INTO BEDROCK (FT)	ESTIMATED TOP OF BEDROCK EL	VERT REINF	TIES (SEE NOTE 4)
P1	2'-0"	SEE PLAN	26'-0"	5112	(8) #9	#4@6"

DRILLED PIER NOTES:

1. IF DRILLED PIER DIMENSION IS GREATER THAN WIDTH OF GRADE BEAM, LOCATE DOWELS TO FIT WITHIN BEAM.
2. CONTRACTORS OPTION TO PROVIDE BAR TERMINATOR RATHER THAN STANDARD HOOK.
3. PROVIDE MINIMUM PENETRATION SHOWN IN SCHEDULE INTO BEDROCK REGARDLESS OF ESTIMATED LENGTH.
4. SPIRALS MAY BE USED IN LIEU OF HORIZONTAL TIES SHOWN. FABRICATED SPIRALS TO CONFORM TO ACI 318 REQUIREMENTS. IF LAPS ARE REQUIRED, LAP AND TIE IN ACCORDANCE WITH ACI 318 REQUIREMENTS AND AS APPROVED BY THE ENGINEER.
5. CONCRETE SHALL BE CLASS P.
6. ROUGHEN LOWER 5'-0" OF SIDE WALLS WITH SAWTOOTH CUTTER TOOL. SEE SPECIFICATION 31_63_30.
7. UPPER SECTION OF DRILLED PIER SHALL BE FORMED. DO NOT PERMIT PIER TO MUSHROOM.
8. FINAL TOP OF BEDROCK ELEVATION WILL BE DETERMINED IN THE FIELD BY THE CONTRACTOR'S GEOTECHNICAL ENGINEER.
9. PROVIDE TEMPORARY CASING THROUGH THE SATURATED SANDY SOIL AND SEAL INTO THE BEDROCK

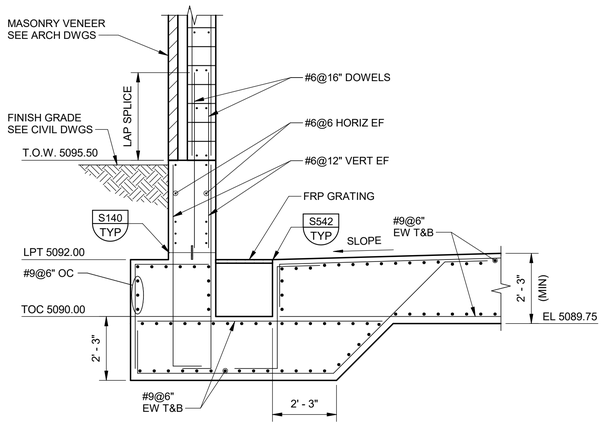

J SECTION
50S01
SCALE: 3/8" = 1'-0"

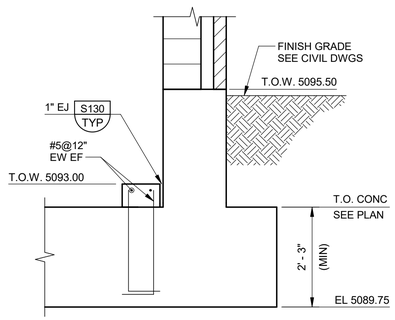

K SECTION
50S01
SCALE: 1/2" = 1'-0"

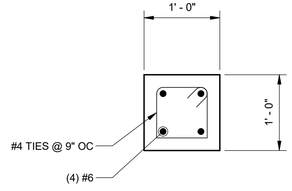

2 DETAIL
50S01
SCALE: 1/2" = 1'-0"

REV	DATE	BY	DESCRIPTION
			BID SET

DESIGNED NV
DRAWN DG
CHECKED MAK
DATE APRIL 2026

COLORADO REGISTERED MARK ALAN KELLER 34300 PROFESSIONAL ENGINEER

carollo

THORNTON WATER PROJECT

CITY OF THORNTON-THORNTON WATER PROJECT

CHEMICAL BUILDING AND PRV VAULTS

STRUCTURAL

CHEMICAL BUILDING SECTIONS 2

VERIFY SCALES
BAR IS ONE INCH ON ORIGINAL DRAWING
0 1"
IF NOT ONE INCH ON THIS SHEET, ADJUST SCALES ACCORDINGLY

JOB NO. 204403
DRAWING NO. 50S06
SHEET NO. 88 OF 168

PLOT DATE: 4/1/2026 11:43:53 AM

FILE NAME: R:\d0583920\204403_50S0801.rvt

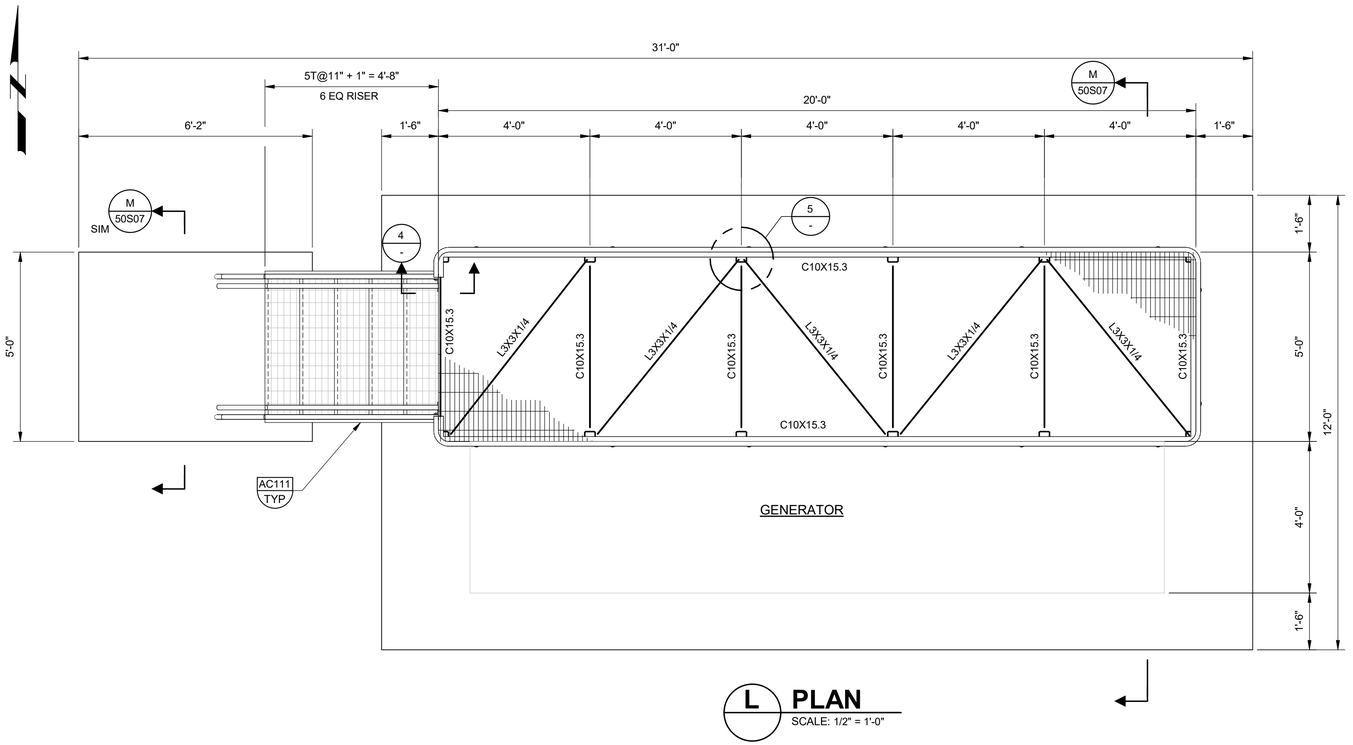

L PLAN
SCALE: 1/2" = 1'-0"

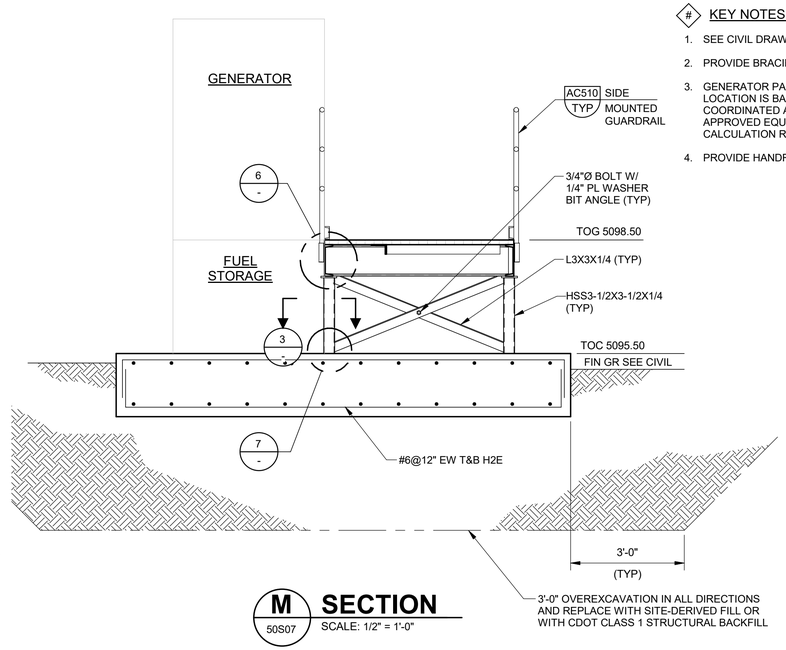

M SECTION
50S07 SCALE: 1/2" = 1'-0"

GENERAL NOTES:

1. SEE DRAWING 00GS01 FOR GENERAL STRUCTURAL NOTES.
2. NOTE THAT ALL MEMBERS AND CONNECTION NEED TO BE HOT DIPPED GALVANIZED

KEY NOTES:

1. SEE CIVIL DRAWINGS FOR LOCATION OF THE GENERATOR PAD.
2. PROVIDE BRACING ON ALL FOUR SIDES.
3. GENERATOR PAD DIMENSIONS, PLATFORM DIMENSIONS, AND LOCATION IS BASED ON CUMMINS POWER GENERATOR. COORDINATED AND VERIFY DIMENSIONS AND ELEVATIONS WITH APPROVED EQUIPMENT MANUFACTURER'S ANCHORAGE CALCULATION REQUIREMENTS.
4. PROVIDE HANDRAILS AS REQUIRED TO SUIT THE EQUIPMENT.

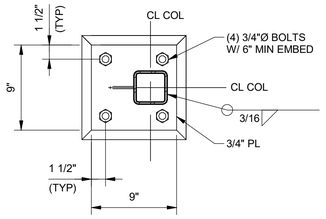

3 DETAIL
- SCALE: 1 1/2" = 1'-0"

0 1' 2' 4'
SCALE: 1 1/2" = 1'-0"

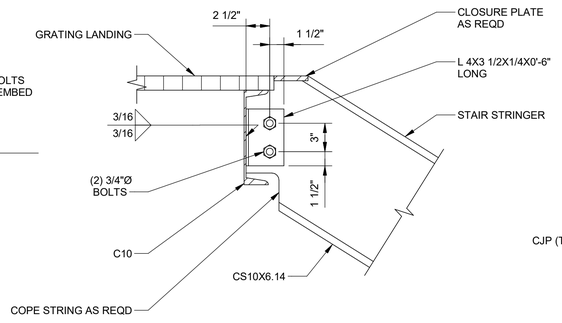

4 DETAIL
- SCALE: 1 1/2" = 1'-0"

0 1' 2' 4'
SCALE: 1 1/2" = 1'-0"

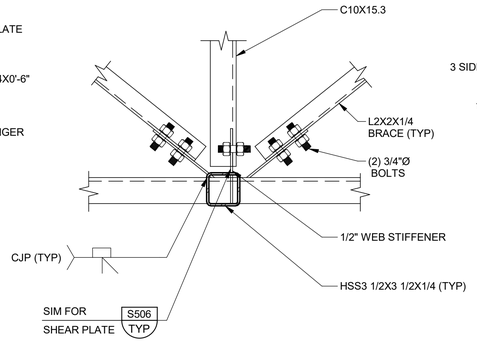

5 DETAIL
- SCALE: 1 1/2" = 1'-0"

0 1' 2' 4'
SCALE: 1 1/2" = 1'-0"

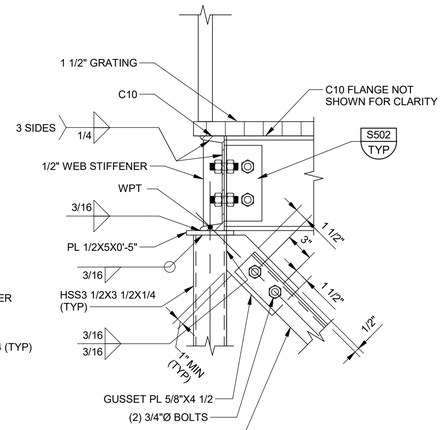

6 DETAIL
- SCALE: 1 1/2" = 1'-0"

0 1' 2' 4'
SCALE: 1 1/2" = 1'-0"

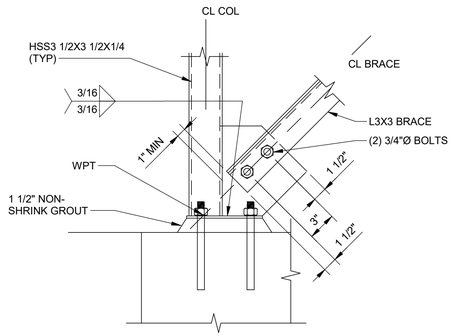

7 DETAIL
- SCALE: 1 1/2" = 1'-0"

0 1' 2' 4'
SCALE: 1 1/2" = 1'-0"

REV	DATE	BY	DESCRIPTION
			BID SET

DESIGNED NV
DRAWN JBB
CHECKED MAK
DATE APRIL 2026

COLORADO REGISTERED
MARK ALAN KELLER
34300
digitally signed by Mark Alan Keller
Project Info: Carollo Engineers, P.C.
Date: 2026.03.05 10:50:39 -07'00'
PROFESSIONAL ENGINEER

carollo®

THORNTON WATER PROJECT

CITY OF THORNTON-THORNTON WATER PROJECT

CHEMICAL BUILDING AND PRV VAULTS

STRUCTURAL

CHEMICAL BUILDING
GENERATOR PAD PLAN AND DETAILS

VERIFY SCALES
BAR IS ONE INCH ON ORIGINAL DRAWING
0 1"
IF NOT ONE INCH ON THIS SHEET, ADJUST SCALES ACCORDINGLY

JOB NO. 204403
DRAWING NO. 50S07
SHEET NO. 89 OF 168

PLOT DATE: 4/30/2026 12:05:02 PM

FILE NAME: R:\d0583920\204403_50S0802.rvt

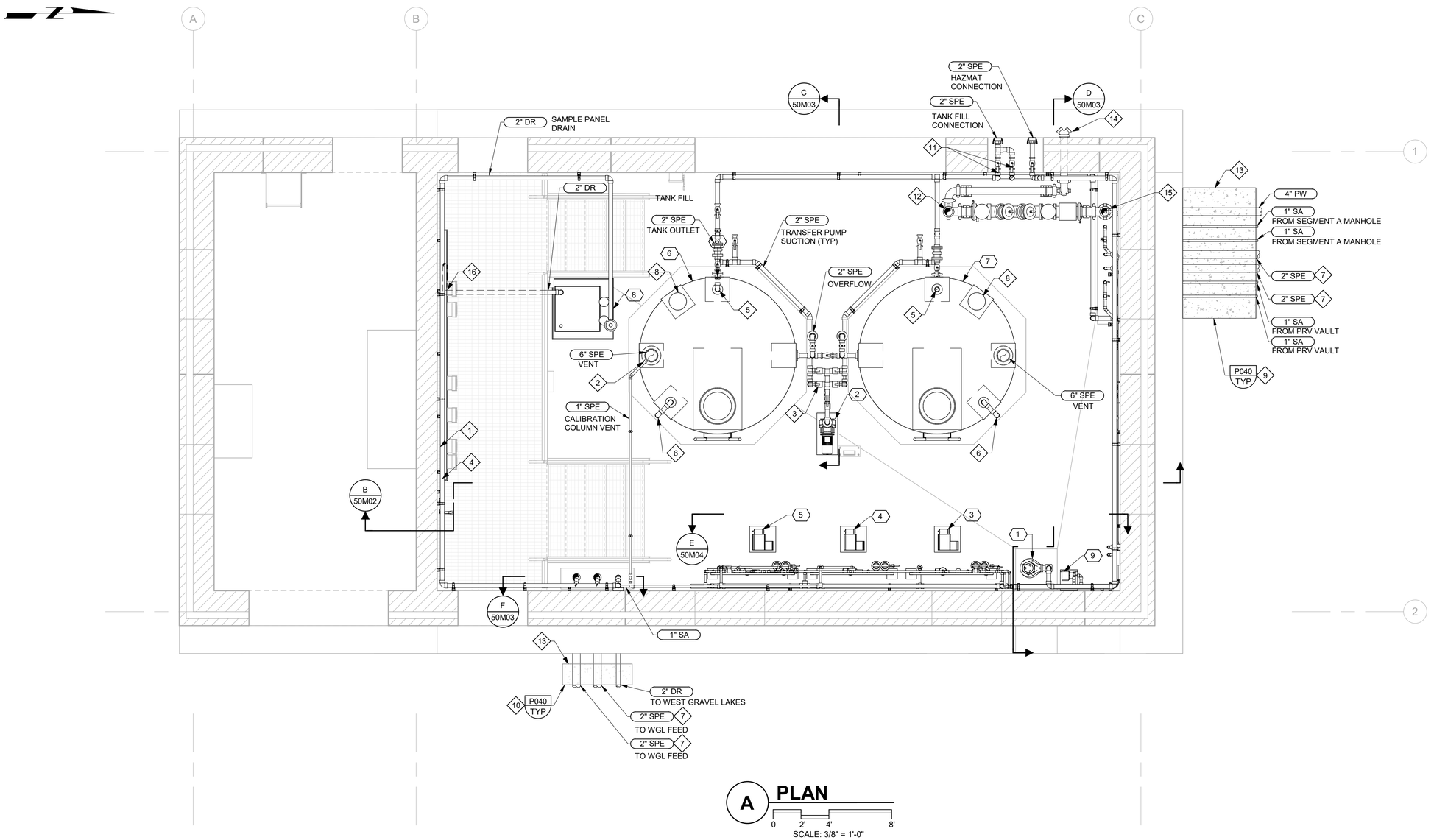

A PLAN

0 2' 4' 8'

SCALE: 3/8" = 1'-0"

GENERAL NOTES:

1. REFER TO GENERAL MECHANICAL NOTES FOR ADDITIONAL INFORMATION AND REQUIREMENTS.
2. APPLY A VINYL ESTER COATING TO THE FLOOR AND WALLS OF THE CHEMICAL CONTAINMENT AREA CONCRETE PER SECTION 09 _96_01.
3. PROTECT ALL PLASTIC PIPING USING A THERMOPLASTIC ELASTOMER CUSHION STRIP AT EACH PIPE SUPPORT PER SPECIFICATION SECTION 40_05_07.03.
4. PROVIDE PIPE SUPPORTS AT A MAXIMUM SPACING OF 3 FEET FOR ALL 1-INCH HDPE PIPING AND 4 FEET FOR ALL 2-INCH HDPE PIPING PER MANUFACTURER'S RECOMMENDATION.

KEY NOTES:

1. WATER QUALITY INSTRUMENT PANEL. SEE DETAIL NA900 ON SHEET 00TN09 FOR ADDITIONAL DETAILS.
2. CONNECT CHEMICAL PUMP CALIBRATION COLUMN 1-INCH VENT HEADER TO SPE TANK 1 6-INCH VENT PIPE.
3. MANIFOLD THE TANK EFFLUENT LINES, TRANSFER PUMP SUCTION, AND TRANSFER PUMP DISCHARGE SUCH THAT CHEMICAL CAN BE REMOVED AND ADDED TO EACH TANK THROUGH A COMMON PIPE. SEE SECTION B AND SECTION C FOR ADDITIONAL DETAILS.
4. ROUTE SAMPLE LINES TO SAMPLE PANEL.
5. PROVIDE FILL LINE DOWN PIPE TO 1 FT ABOVE TANK BOTTOM.
6. REVERSE LEVEL GAUGE
7. CHEMICAL YARD PIPING SHALL BE DOUBLE CONTAINED. PIPE SIZE SHOWN IS INNER PIPE DIAMETER.
8. SPARE BLIND FLANGE CONNECTION.
9. PIPES IN THE NORTHWEST CORNER OF THE BUILDING SHALL BE SPACED AT 1'-0" ON CENTER IN THE YARD AS THEY ENTER THE BUILDING.
10. PIPES ON THE EAST SIDE OF THE STRUCTURE SHALL BE SPACED 1'-0" ON CENTER IN THE YARD AND AS THEY ENTER THE BUILDING.
11. INCLUDE BALL CHECK VALVES DOWNSTREAM OF THE ISOLATION BALL VALVES ON TANK FILL LINES.
12. FIRE SUPPRESSION SYSTEM CONNECTION.
13. SEE SHEET 50C12 FOR CONTINUATION OF PIPING IN YARD.
14. FIRE DEPARTMENT CONNECTION.
15. INCLUDE FLANGE ISOLATION KIT ON PW PIPE FROM YARD INTO THE BUILDING PER DETAIL B ON SHEET 00CP02.
16. CONTRACTOR TO COORDINATE PENETRATION AND DRAIN ROUTING WITH FRP MANUFACTURER.

KEY TAGS:

#		
1	PMP-500	SUMP PUMP
2	PMP-505	SPE TRANSFER PUMP
3	PMP-520	SPE FEED PUMP
4	PMP-530	SPE FEED PUMP
5	PMP-540	SPE FEED PUMP
6	TNK-511	SPE TANK 1
7	TNK-521	SPE TANK 2
8	PMP-621	SAMPLE PANEL SUMP
9	PMP-622	SEGMENT A SAMPLE PUMP

REV	DATE	BY	DESCRIPTION
			BID SET

DESIGNED SJH
DRAWN LEH
CHECKED JAM
DATE MAY 2026

COLORADO LICENSED
JOHN ALEXANDER MAYER
57176
Digitally signed by John Alexander Mayer
Date: 2026.04.02 15:50:17 -06'00'
PROFESSIONAL ENGINEER

carollo

THORNTON WATER PROJECT

CITY OF THORNTON-THORNTON WATER PROJECT
CHEMICAL BUILDING AND PRV VAULTS
MECHANICAL
CHEMICAL BUILDING PLAN

VERIFY SCALES
BAR IS ONE INCH ON ORIGINAL DRAWING
0 1"
IF NOT ONE INCH ON THIS SHEET, ADJUST SCALES ACCORDINGLY

JOB NO. 204403
DRAWING NO. 50M01
SHEET NO. 90 OF 168

PLOT DATE: 4/2/2026 3:16:50 PM
FILE NAME: R:\d0583932\204403_50M0801.rvt

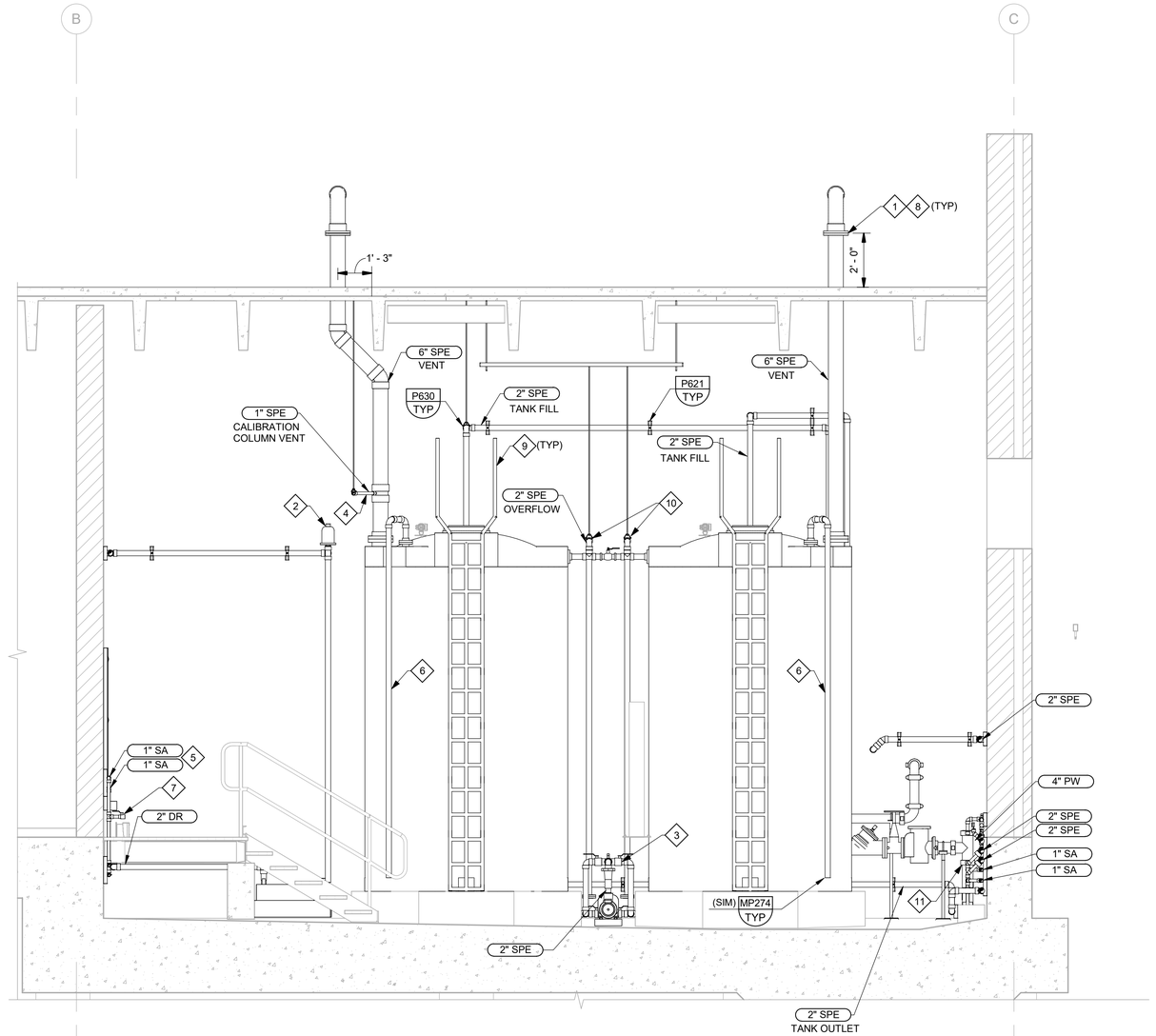

B 50M01 **SECTION**

0 2' 4' 8'

SCALE: 3/8" = 1'-0"

GENERAL NOTES:

1. REFER TO GENERAL MECHANICAL NOTES FOR ADDITIONAL INFORMATION AND REQUIREMENTS.
2. APPLY A HIGH-PERFORMANCE COATING TO THE FLOOR AND WALLS OF THE CHEMICAL CONTAINMENT AREA CONCRETE PER SECTION 09_96_01.
3. PROTECT ALL PLASTIC PIPING USING A THERMOPLASTIC ELASTOMER CUSHION STRIP AT EACH PIPE SUPPORT PER SPECIFICATION SECTION 40_05_07.03.
4. PROVIDE PIPE SUPPORTS AT A MAXIMUM SPACING OF 3 FEET FOR ALL 1-INCH HDPE PIPING AND 4 FEET FOR ALL 2-INCH HDPE PIPING PER MANUFACTURER'S RECOMMENDATION.

KEY NOTES:

1. PROVIDE A GOOSE NECK ON EACH VENT PIPE. PROVIDE 24 MESH FRP OR PVC INSECT SCREEN AFFIXED TO THE END OF THE VENT PIPE WITH PVC RING FLANGE AND SST NUTS AND BOLTS.
2. AIR RELEASE VALVE SHALL INCLUDE OVERFLOW DRAIN PIPING TO SUMP TO PREVENT CHEMICAL SPILLS.
3. SST BALL VALVE (TYP)
4. CONNECT CHEMICAL PUMP CALIBRATION COLUMN VENT HEADER TO SPE TANK 1 VENT PIPE.
5. INCLUDE FLUSHING LINES ON EACH SAMPLE LINE WITH SOLENOID VALVES AND ISOLATION BALL VALVES. AS SHOWN ON 50N08 (SV-621 AND SV-622), ROUTE TO THE ANALYZER WASTE SUMP. FLUSHING LINES ARE NOT SHOWN ON THE MECHANICAL DRAWINGS. COORDINATE THE FINAL LOCATIONS OF THE SOLENOID VALVES WITH THE OWNER AND ENGINEER. FIELD ROUTE FLUSHING LINES TO THE ANALYZER WASTE SUMP.
6. REVERSE LEVEL GAUGE, GAUGE TO BE SUPPORTED BY SST STRUT PER TYP MP274.
7. INCLUDE HOSE CONNECTIONS ON EACH SAMPLE LINE WITH ISOLATION BALL VALVES TO ALLOW FOR BACKFLUSHING OF THE SAMPLE LINES.
8. COAT EXPOSED TANK VENTS ON THE ROOF OF THE CHEMICAL BUILDING USING AN ACRYLIC COATING PRODUCT PER SPECIFICATION 09_96_01.
9. OSHA COMPLIANT TANK ACCESS LADDER. LADDER SHALL INCLUDE AN OSHA COMPLIANT FALL PROTECTION SYSTEM.
10. TANK OVERFLOW ELEVATIONS SHALL NOT EXCEED TANK HEIGHT.
11. INCLUDE FLANGE ISOLATION KIT PER DETAIL B ON SHEET 00CP02.

REV	DATE	BY	DESCRIPTION
			BID SET

DESIGNED JAM
DRAWN JDW
CHECKED WVS
DATE MAY 2026

COLORADO LICENSED JOHN ALEXANDER MARTIN 57176 PROFESSIONAL ENGINEER

CITY OF THORNTON-THORNTON WATER PROJECT

CHEMICAL BUILDING AND PRV VAULTS

MECHANICAL

CHEMICAL BUILDING SECTIONS 1

VERIFY SCALES
BAR IS ONE INCH ON ORIGINAL DRAWING
0 1"
IF NOT ONE INCH ON THIS SHEET, ADJUST SCALES ACCORDINGLY

JOB NO. 204403
DRAWING NO. 50M02
SHEET NO. 91 OF 168

PLOT DATE: 4/1/2026 12:49:51 PM

FILE NAME: R:\d0583932\204403_50M0801.rvt

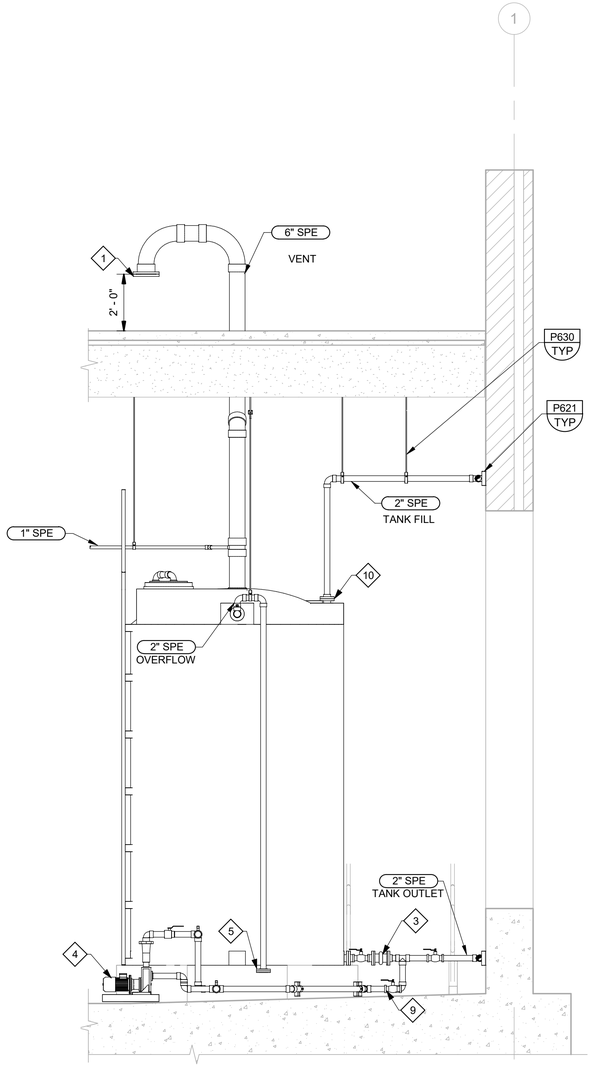

C SECTION
50M01
0 2' 4' 8'
SCALE: 3/8" = 1'-0"

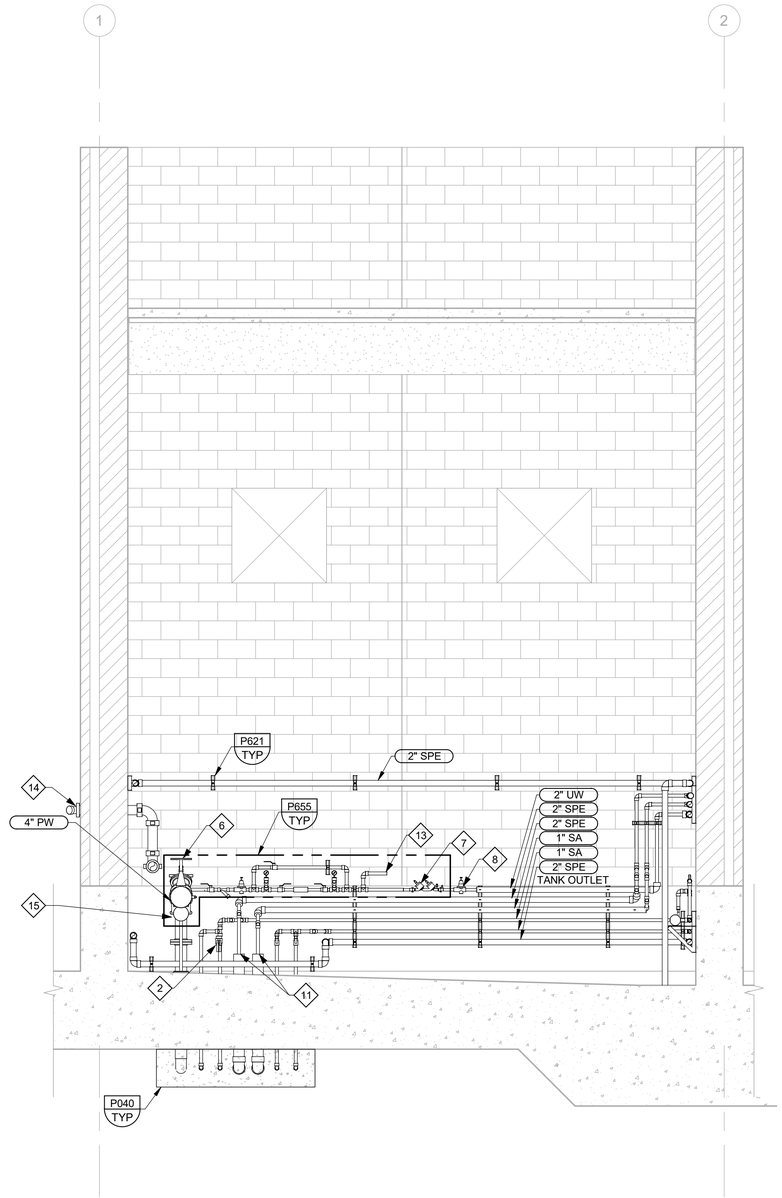

D SECTION
50M01
0 2' 4' 8'
SCALE: 3/8" = 1'-0"

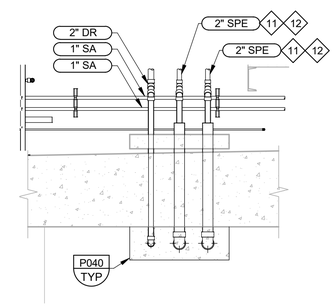

F SECTION
50M01
0 2' 4' 8'
SCALE: 3/8" = 1'-0"

GENERAL NOTES:

1. REFER TO GENERAL MECHANICAL NOTES FOR ADDITIONAL INFORMATION AND REQUIREMENTS.
2. APPLY A VINYL ESTER COATING TO THE FLOOR AND WALLS OF THE CHEMICAL CONTAINMENT AREA CONCRETE PER SECTION 09 _96_01.
3. PROTECT ALL PLASTIC PIPING USING A THERMOPLASTIC ELASTOMER CUSHION STRIP AT EACH PIPE SUPPORT PER SPECIFICATION SECTION 40_05_07.03.
4. PROVIDE PIPE SUPPORTS AT A MAXIMUM SPACING OF 3 FEET FOR ALL 1-INCH HDPE PIPING AND 4 FEET FOR ALL 2-INCH HDPE PIPING PER MANUFACTURER'S RECOMMENDATION.

KEY NOTES:

1. PROVIDE A GOOSE NECK ON EACH VENT PIPE. PROVIDE 24 MESH FRP OR PVC INSECT SCREEN AFFIXED TO THE END OF THE VENT PIPE WITH PVC RING FLANGE AND SST NUTS AND BOLTS.
2. PVC BALL VALVE (TYP)
3. FLEXIJOINT PTFE EXPANSION JOINT, DURCO FLANGES, 5 CONVOLUTIONS.
4. SPE TRANSFER PUMP
5. VAPOR PAPER BETWEEN FLANGE AND RING FLANGE, PROTEK WRAP PW33 OR EQUAL.
6. FIRE SUPPRESSION SUPPLY LINE. SEE 50M01 FOR CONTINUATION.
7. BACKFLOW PREVENTER MUST BE APPROVED BY THE OWNER PRIOR TO INSTALLATION.
8. PRESSURE REGULATING VALVE
9. TANK DRAIN. SEE PLAN VIEW ON 50M01 FOR ADDITIONAL DETAILS.
10. PROVIDE FILL LINE DOWN PIPE TO 1 FT ABOVE TANK BOTTOM.
11. TRANSITION TO DOUBLE CONTAINED POLYETHYLENE PIPE.
12. PIPES SHALL BE DOUBLE CONTAINED AS THEY LEAVE THE BUILDING. SEE YARD PIPING DRAWINGS FOR CONTINUATION.
13. DOMESTIC PLUMBING CONNECTION. SEE PLUMBING DRAWINGS FOR CONTINUATION.
14. FIRE DEPARTMENT CONNECTION SEE 50M01 FOR CONNECTION TO FIRE SUPPRESSION SYSTEM RISER.
15. INCLUDE FLANGE ISOLATION KIT PER DETAIL B ON SHEET 00CP02.

REV	DATE	BY	DESCRIPTION
			BID SET

DESIGNED JAM
DRAWN JDW
CHECKED WVS
DATE MAY 2026

COLORADO LICENSED PROFESSIONAL ENGINEER
JOHN ALEXANDER MEYER
57176
Digitally signed by John Alexander Meyer
Contact Info: Carollo Engineers, Inc.
Date: 2026.03.04 09:11:13 -07'00'

carollo®

THORNTON WATER PROJECT

CITY OF THORNTON-THORNTON WATER PROJECT
CHEMICAL BUILDING AND PRV VAULTS
MECHANICAL
CHEMICAL BUILDING
SECTIONS 2

VERIFY SCALES
BAR IS ONE INCH ON ORIGINAL DRAWING
0 1"
IF NOT ONE INCH ON THIS SHEET, ADJUST SCALES ACCORDINGLY

JOB NO. 204403
DRAWING NO. 50M03
SHEET NO. 92 OF 168

PLOT DATE: 4/2/2026 3:18:52 PM

FILE NAME: R:\d0583932\204403_50M0801.rvt

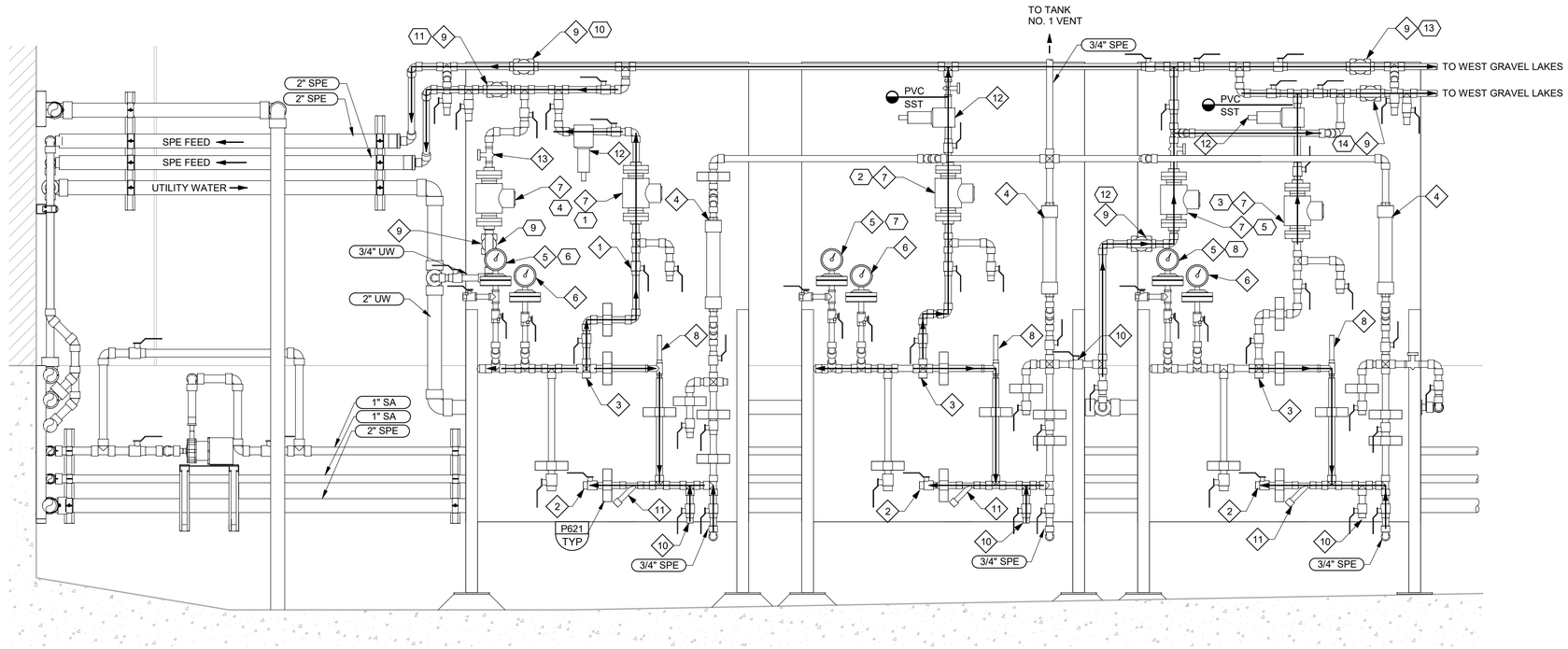

E
50M01
SECTION
0 6" 1'-0" 1'-6"
SCALE: 1 1/2" = 1'-0"

GENERAL NOTES:

1. REFER TO GENERAL MECHANICAL NOTES FOR ADDITIONAL INFORMATION AND REQUIREMENTS.
2. APPLY A HIGH-PERFORMANCE COATING TO THE FLOOR AND WALLS OF THE CHEMICAL CONTAINMENT AREA CONCRETE PER SECTION 09_96_01.
3. PROTECT ALL PLASTIC PIPING USING A THERMOPLASTIC ELASTOMER CUSHION STRIP AT EACH PIPE SUPPORT PER SPECIFICATION SECTION 40_05_07.03.
4. PROVIDE PIPE SUPPORTS AT A MAXIMUM SPACING OF 3 FEET FOR ALL 1-INCH HDPE PIPING AND 4 FEET FOR ALL 2-INCH HDPE PIPING PER MANUFACTURER'S RECOMMENDATION.
5. ALL PIPE SUPPORTS IN THE CHEMICAL BUILDINGS SHALL BE STAINLESS STEEL OR FRP.

KEY NOTES:

1. BALL VALVE (TYP)
2. TO PUMP SUCTION
3. FROM PUMP DISCHARGE
4. CALIBRATION COLUMN
5. PRESSURE INDICATING TRANSMITTER WITH DIAPHRAGM SEAL. REFER TO INSTRUMENTATION DRAWINGS.
6. PRESSURE GAUGE WITH DIAPHRAGM SEAL.
7. MAGNETIC FLOW METER
8. PRESSURE RELIEF VALVE
9. ACTUATED BALL VALVE
10. DRAIN / FLUSH HOSE CONNECTION (TYP)
11. SST WYE STRAINER
12. BACK PRESSURE VALVE
13. NEEDLE VALVE

KEY TAGS:

1	FE-522	SPE FLOWMETER NO. 1
2	FE-532	SPE FLOWMETER NO. 2
3	FE-542	SPE FLOWMETER NO. 3
4	FE-523	UTILITY WATER FLOW NO. 1
5	FE-526	UTILITY WATER FLOW NO. 2
6	PE-521	SPE FEED PUMP NO. 1 DISCHARGE
7	PE-531	SPE FEED PUMP NO. 2 DISCHARGE
8	PE-541	SPE FEED PUMP NO. 3 DISCHARGE
9	FV-523	UTILITY WATER FLOW NO. 1
10	FV-524	CHEMICAL INJECTION FEED NO. 1
11	FV-525	CHEMICAL INJECTION FEED NO. 2
12	FV-526	UTILITY WATER FLOW NO. 2
13	FV-527	CHEMICAL INJECTION FEED NO. 3
14	FV-528	CHEMICAL INJECTION FEED NO. 4

REV	DATE	BY	DESCRIPTION
			BID SET

DESIGNED SJH
DRAWN LEH
CHECKED WVS
DATE MAY 2026

COLORADO LICENSED PROFESSIONAL ENGINEER
JOHN ALEXANDER MEYER
57176
Digitally signed by John Alexander Meyer
Date: 2026.05.04 16:53:31 -04'00'

carollo®

THORNTON WATER PROJECT

CITY OF THORNTON-THORNTON WATER PROJECT
CHEMICAL BUILDING AND PRV VAULTS
MECHANICAL
CHEMICAL BUILDING
SECTIONS 3

VERIFY SCALES
BAR IS ONE INCH ON ORIGINAL DRAWING
0 1"
IF NOT ONE INCH ON THIS SHEET, ADJUST SCALES ACCORDINGLY

JOB NO. 204403
DRAWING NO. 50M04
SHEET NO. 93 OF 168

PLOT DATE: 4/1/2026 12:53:53 PM

FILE NAME: R:\d0583932\204403_50M0801.rvt

GENERAL NOTES:

1. MOUNT THERMOSTATS AT 48'' AFF AND LABEL WITH ITS CONTROLLING DEVICE.
2. DUCTWORK SHOWN TO BE ALUMINUM PER SPECIFICATION SECTION 23_31_13.

KEY NOTES:

1. WALL-MOUNTED GAS UNIT HEATER TO BE MOUNTED AT 8'-0'' AFF. REFER TO SPECIFICATION SECTION 23_83_01 FOR ADDITIONAL REQUIREMENTS. PROVIDE WITH GAS FLUE AND INTAKE PIPE FOR UNIT HEATER THROUGH WALL. INSTALL PER HEATER MANUFACTURER'S REQUIREMENTS.
2. MINI-SPLIT SYSTEM AIR HANDLING UNIT MOUNTED ON CEILING AT 10'-0'' AFF. ROUTE REFRIGERANT PIPING TO CORRESPONDING ROOFTOP HEAT PUMP UNIT PER MANUFACTURER REQUIREMENTS. REFER TO SPECIFICATION SECTION 23_81_44 FOR ADDITIONAL REQUIREMENTS.
3. 18x18 EA DUCT UP TO EXHAUST FAN C-EF-1.
4. 18x18 SA DOWN FROM MAKEUP AIR UNIT C-MAU-1.
5. REFRIGERANT LINES. FIELD ROUTE TO CORRESPONDING OUTDOOR UNITS ON ROOF PER MANUFACTURER REQUIREMENTS. AVOID RUNNING LIQUID SIDE PIPE OVER ELECTRICAL EQUIPMENT. INSULATE ALL PIPING PER SPECIFICATIONS.
6. 1'' SCH 80 PVC CONDENSATE DRAINPIPE. SLOPE AT 1/4'' PER FOOT IN THE DIRECTION OF FLOW. INSULATE PER SPECIFICATIONS.
7. HVAC MASTER CONTROLLER AND ELECTRICAL. REFER TO SPECIFICATION 23_09_13 FOR ADDITIONAL REQUIREMENTS.
8. TIE-IN CONDENSATE LINE TO PACKAGED SUMP PUMP SYSTEM DRAIN LINE.

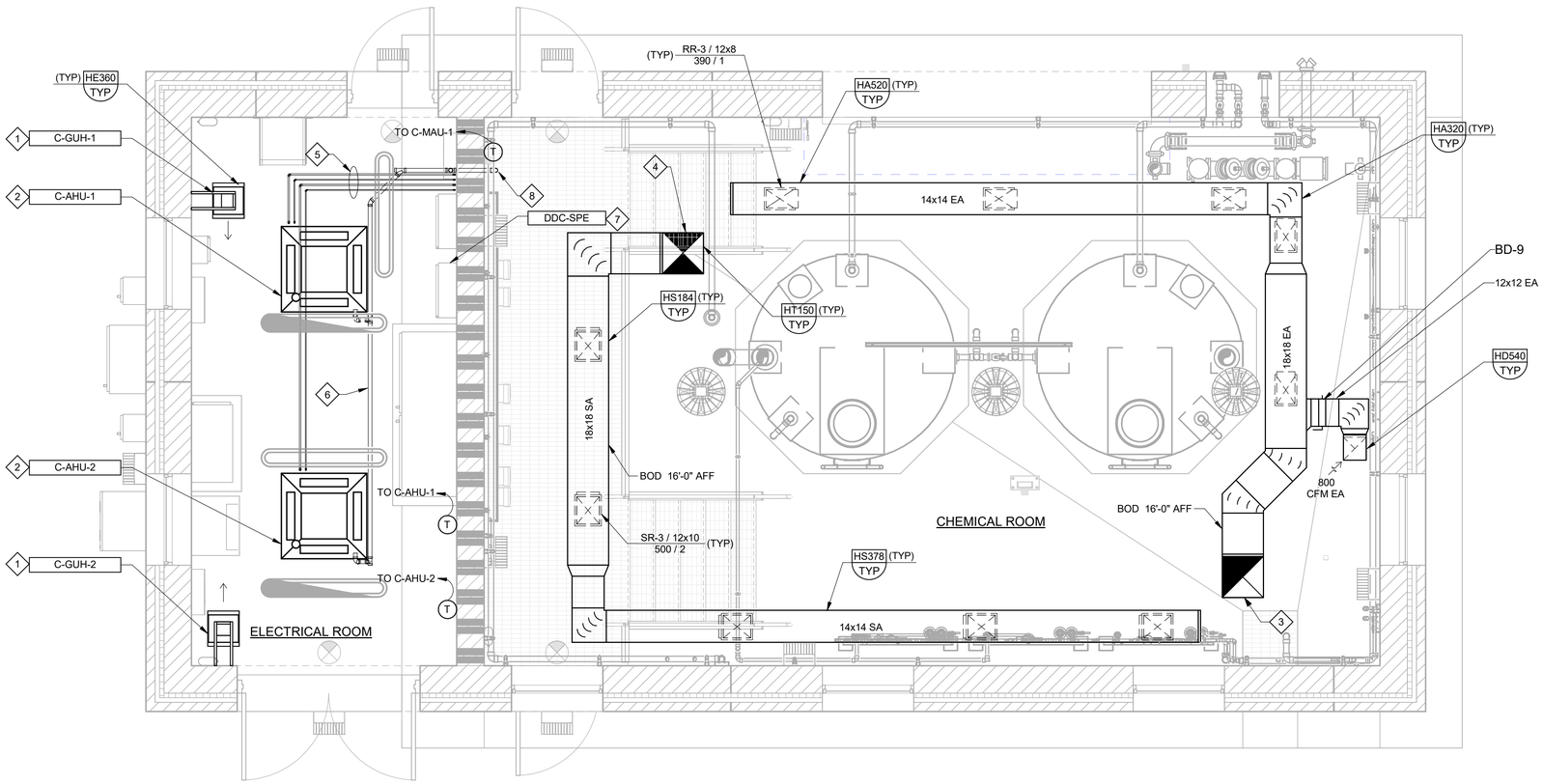

A PLAN

0 2' 4' 8'

SCALE: 3/8" = 1'-0"

REV	DATE	BY	DESCRIPTION
			BID SET

DESIGNED WJS
DRAWN MSA
CHECKED CAG
DATE MAY 2026

COLORADO LICENSED CRAIG A. GREEN 0050567 PROFESSIONAL ENGINEER

CITY OF THORNTON-THORNTON WATER PROJECT

CHEMICAL BUILDING AND PRV VAULTS

HVAC

CHEMICAL BUILDING FLOOR PLAN

VERIFY SCALES
BAR IS ONE INCH ON ORIGINAL DRAWING
0 1"
IF NOT ONE INCH ON THIS SHEET, ADJUST SCALES ACCORDINGLY

JOB NO. 204403
DRAWING NO. 50H01
SHEET NO. 94 OF 168

PLOT DATE: 3/25/2026 6:00:01 PM

FILE NAME: R:\d0583941\204403_50H0801.rvt

GENERAL NOTES:

1. ROOF DUCT PENETRATIONS TO BE COORDINATED WITH STRUCTURAL PRECAST DOUBLE TEE MANUFACTURER.
2. ALL EXTERNAL DUCTWORK TO BE INTERNALLY INSULATED. REFER TO SPECIFICATION 23_07_13 FOR ADDITIONAL REQUIREMENTS.

KEY NOTES:

1. INDIRECT GAS-FIRED MAKEUP AIR UNIT MOUNTED ON MANUFACTURER ROOF CURB. REFER TO SPECIFICATION 23_75_34 FOR ADDITIONAL REQUIREMENTS.
2. MINI-SPLIT SYSTEM HEAT PUMP UNIT. ROUTE REFRIGERANT PIPING TO CORRESPONDING AIR HANDLING UNIT PER MANUFACTURER REQUIREMENTS. REFER TO SPECIFICATION SECTION 23_81_44 FOR ADDITIONAL REQUIREMENTS.
3. ROOF MOUNTED CENTRIFUGAL EXHAUST FAN MOUNTED ON MANUFACTURER ROOF CURB. REFER TO SPECIFICATION 23_34_01 FOR ADDITIONAL REQUIREMENTS.
4. MANUFACTURER REQUIRED CLEARANCE.
5. FLEXIBLE CONNECTION FL-2.
6. REFRIGERANT LINES. FIELD ROUTE TO CORRESPONDING INDOOR UNITS INSIDE ELECTRICAL ROOM PER MANUFACTURER REQUIREMENTS. AVOID RUNNING LIQUID SIDE PIPE OVER ELECTRICAL EQUIPMENT. INSULATE ALL PIPING PER SPECIFICATIONS.

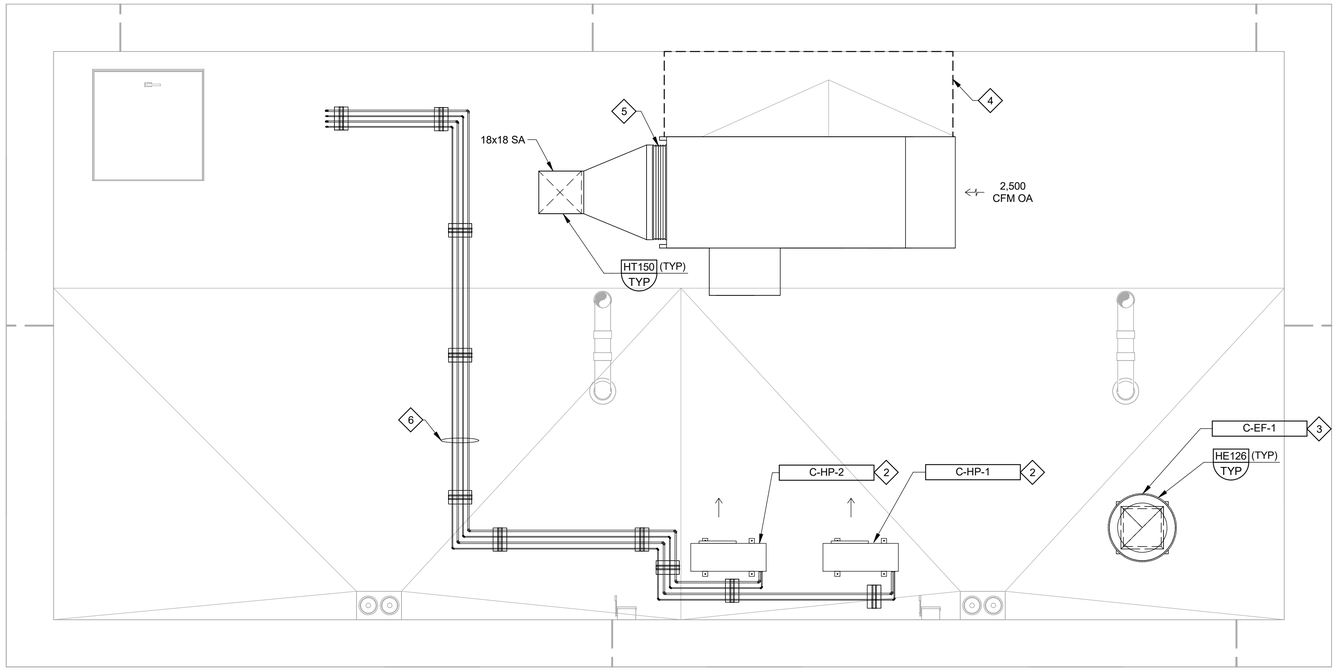

B PLAN

0 2' 4' 8'

SCALE: 3/8" = 1'-0"

REV	DATE	BY	DESCRIPTION
			BID SET

DESIGNED WJS
DRAWN MSA
CHECKED CAG
DATE MAY 2026

COLORADO LICENSED PROFESSIONAL ENGINEER CHAD A. GREEN 0050567 Digitally signed by Chad A. Green Contact Info: Carollo Engineers Date: 2026.03.06 14:49:09 -07'00'

carollo®

THORNTON WATER PROJECT

CITY OF THORNTON-THORNTON WATER PROJECT

CHEMICAL BUILDING AND PRV VAULTS

HVAC

CHEMICAL BUILDING ROOF PLAN

VERIFY SCALES
BAR IS ONE INCH ON ORIGINAL DRAWING
0 1"
IF NOT ONE INCH ON THIS SHEET, ADJUST SCALES ACCORDINGLY

JOB NO. 204403
DRAWING NO. 50H02
SHEET NO. 95 OF 168

PLOT DATE: 3/25/2026 6:00:03 PM

FILE NAME: R:\d0583941\204403_50H0801.rvt

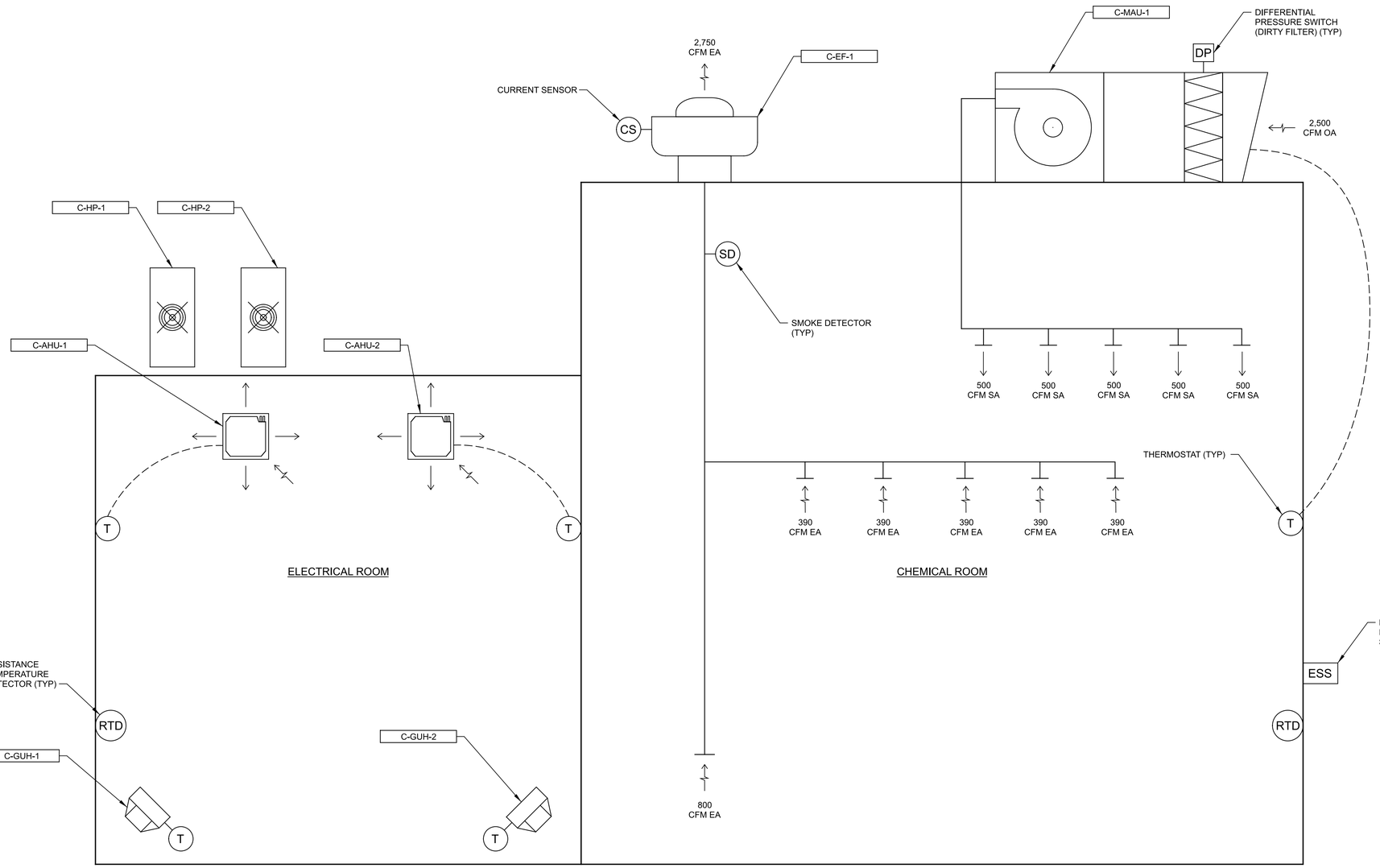

0

REV	DATE	BY	DESCRIPTION
			BID SET

DESIGNED WJS
DRAWN MSA
CHECKED CAG
DATE MAY 2026

COLORADO LICENSED PROFESSIONAL ENGINEER CHAD A. GREEN 0050567 Digitally signed by Chad A. Green Date: 2026.05.06 14:08:14 -06'00'

carollo®

THORNTON WATER PROJECT

CITY OF THORNTON - THORNTON WATER PROJECT

CHEMICAL BUILDING AND PRV VAULTS

HVAC

CHEMICAL BUILDING AIRFLOW SCHEMATIC

VERIFY SCALES
BAR IS ONE INCH ON ORIGINAL DRAWING
0 1"
IF NOT ONE INCH ON THIS SHEET, ADJUST SCALES ACCORDINGLY

JOB NO. 204403
DRAWING NO. 50H03
SHEET NO. 96 OF 168

PROJECT NO. 204403-100000 FILE NAME: 204403_50H03.dgn

LAST SAVED BY: chernandez Model: Layout1 ColorTable: gshade.ctb DesignScript: Carollo_Std_Pen_v0905.pen PlotScale: 1:1 User: svcPW Plot Date: 26-MAR-2026 7:02:32 AM

GENERAL NOTES:

1. PIPING SHALL BE FIELD ROUTED TO AVOID EQUIPMENT, PROCESS PIPING, AND OTHER ITEMS AS NECESSARY.
2. ALL PIPING SHALL BE CONSTRUCTED FROM MATERIALS DEFINED IN THE PROJECT SPECIFICATIONS.
3. DRAWINGS ARE DIAGRAMMATICAL AND NOT EVERY PIPING OFFSET, SIZE, MATERIAL, FITTING, VALVE, INSTRUMENT, OR DIELECTRIC IS SHOWN. PROVIDE AS REQUIRED. PROVIDE MINOR MODIFICATIONS TO PIPING AND SUPPORTS AS REQUIRED.
4. SUPPORT ALL PIPING OFF WALL PER P660/TYP.

(#) KEY NOTES:

1. MAINTAIN 32'' CLEARANCE AROUND EMERGENCY SHOWERHEAD.
2. 3/4'' PW LINE UP TO ROOF. ATTACH LINE TO FREEZELESS ROOF HYDRANT PER SECTION 40_05_65.01.
3. 1-1/2'' BACKFLOW PREVENTER WITH PRESSURE REDUCING VALVE. INSTALL PER MANUFACTURER RECOMMENDATIONS.
4. INSTALL BEFORE ENTERING BUILDING. INCLUDE SHUT OFF VALVE AND DRIP LEG UPSTREAM OF REGULATOR.
5. DISCHARGE ROOF DRAINPIPE 3'' ABOVE GRADE. REFER TO CIVIL FOR DISCHARGE DETAILS.
6. 1'' NG UP TO ROOF TO SERVE C-MAU-1.
7. TERMINATE 4" DR FLUSH WITH BRASS DOWNSPOUT NOZZLE AT 20'-0" AFF.

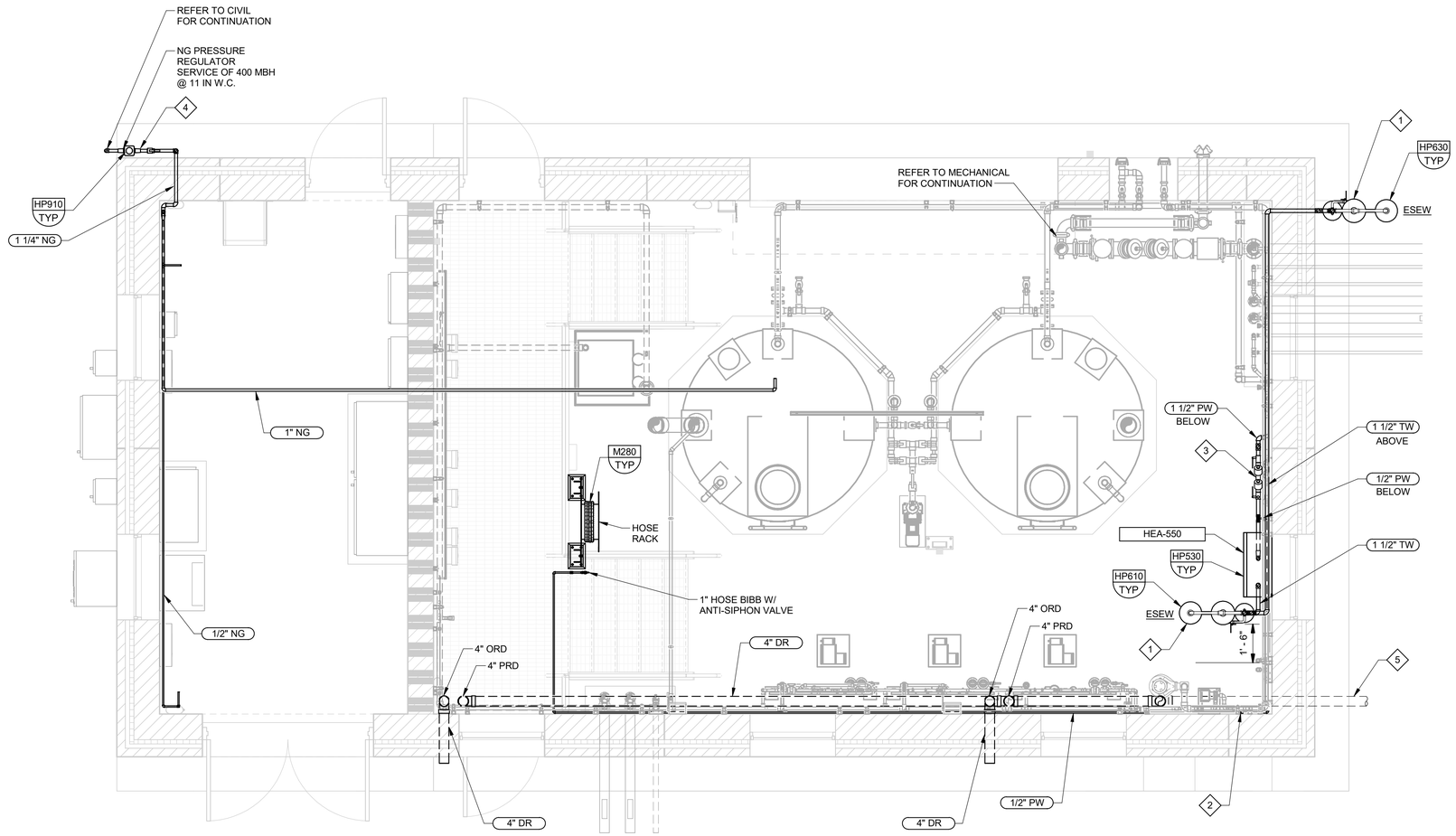

A PLAN
0 2' 4' 8'
SCALE: 3/8" = 1'-0"

REV	DATE	BY	DESCRIPTION
			BID SET

DESIGNED WJS
DRAWN MSA
CHECKED CAG
DATE MAY 2026

COLORADO LICENSED CRAIG A. GREEN 0050567 PROFESSIONAL ENGINEER

CITY OF THORNTON-THORNTON WATER PROJECT
CHEMICAL BUILDING AND PRV VAULTS
PLUMBING
CHEMICAL BUILDING WATER SUPPLY PLAN

VERIFY SCALES
BAR IS ONE INCH ON ORIGINAL DRAWING
0 1"
IF NOT ONE INCH ON THIS SHEET, ADJUST SCALES ACCORDINGLY

JOB NO. 204403
DRAWING NO. 50P01
SHEET NO. 97 OF 168

PLOT DATE: 3/26/2026 10:14:23 AM
FILE NAME: R:\d0583941\204403_50P0801.rvt

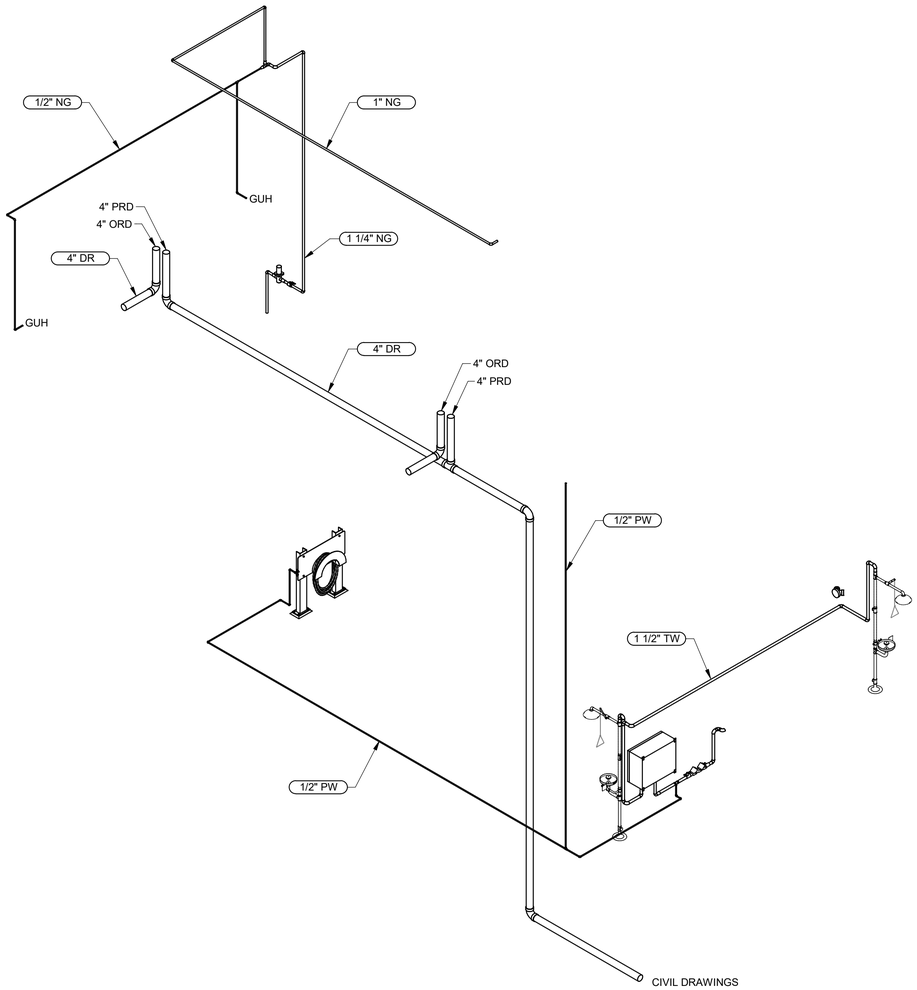

REV	DATE	BY	DESCRIPTION
			BID SET

DESIGNED WJS
DRAWN AMR
CHECKED CAG
DATE MAY 2026

COLORADO LICENSED PROFESSIONAL ENGINEER CHAD A. GREEN 0050567

carollo®

THORNTON WATER PROJECT

CITY OF THORNTON-THORNTON WATER PROJECT

CHEMICAL BUILDING AND PRV VAULTS

PLUMBING

CHEMICAL BUILDING ISOMETRIC

VERIFY SCALES
BAR IS ONE INCH ON ORIGINAL DRAWING
0 1"
IF NOT ONE INCH ON THIS SHEET, ADJUST SCALES ACCORDINGLY

JOB NO. 204403
DRAWING NO. 50P02
SHEET NO. 98 OF 168

PLOT DATE: 3/26/2026 10:14:23 AM

FILE NAME: R:\d0583941\204403_50P0801.rvt

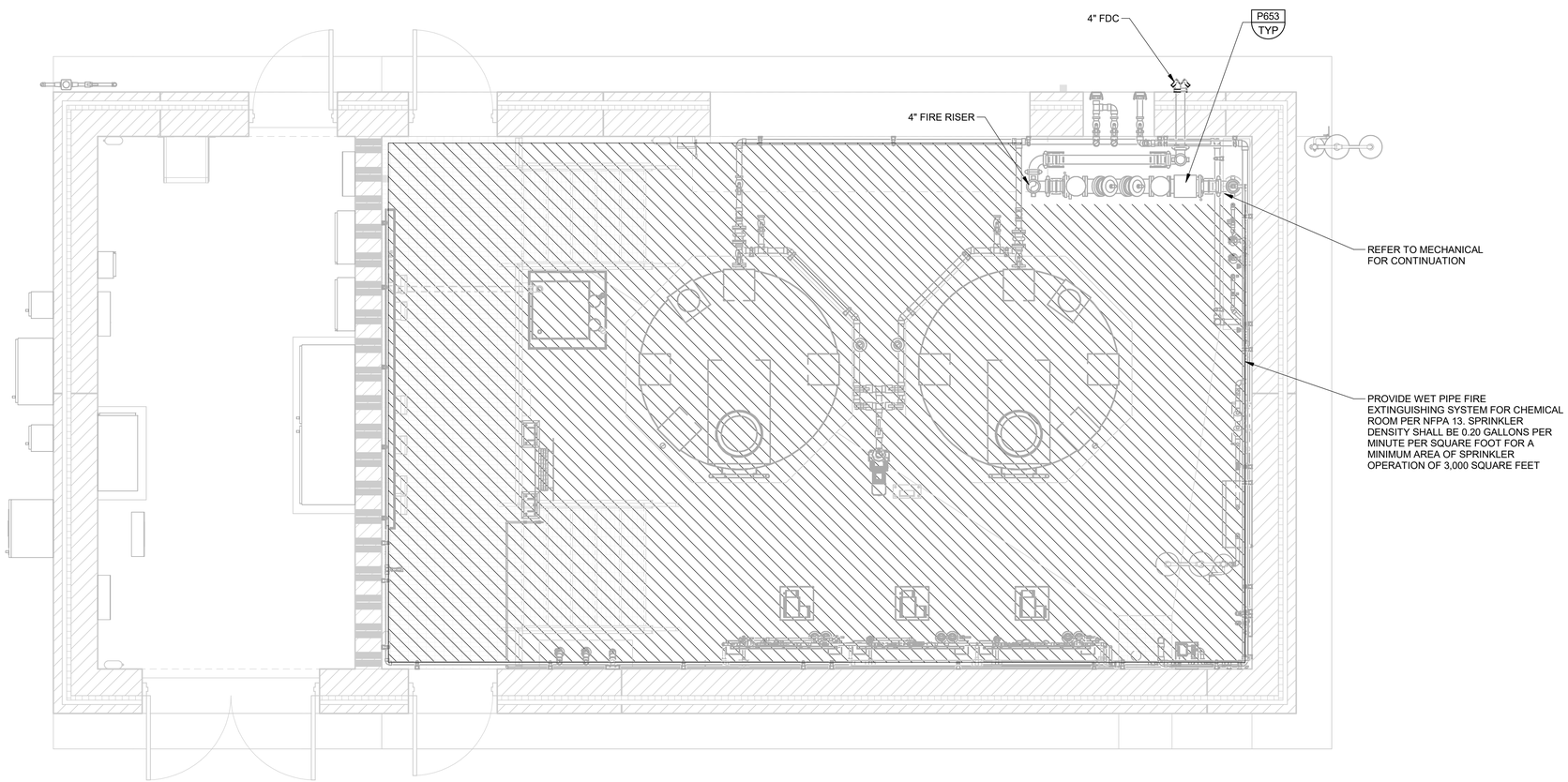

B PLAN

0 2' 4' 8'

SCALE: 3/8" = 1'-0"

REV	DATE	BY	DESCRIPTION
			BID SET

DESIGNED WJS
DRAWN MSA
CHECKED CAG
DATE MAY 2026

COLORADO LICENSED
CRAIG A. GREEN
0050567
PROFESSIONAL ENGINEER

CITY OF THORNTON-THORNTON WATER PROJECT

CHEMICAL BUILDING AND PRV VAULTS

PLUMBING

CHEMICAL BUILDING
FIRE PROTECTION PLAN

VERIFY SCALES
BAR IS ONE INCH ON ORIGINAL DRAWING
0 1"
IF NOT ONE INCH ON THIS SHEET, ADJUST SCALES ACCORDINGLY

JOB NO. 204403
DRAWING NO. 50P03
SHEET NO. 99 OF 168

PLOT DATE: 3/26/2026 10:13:34 AM

FILE NAME: R:\d0583941\204403_50P0801.rvt

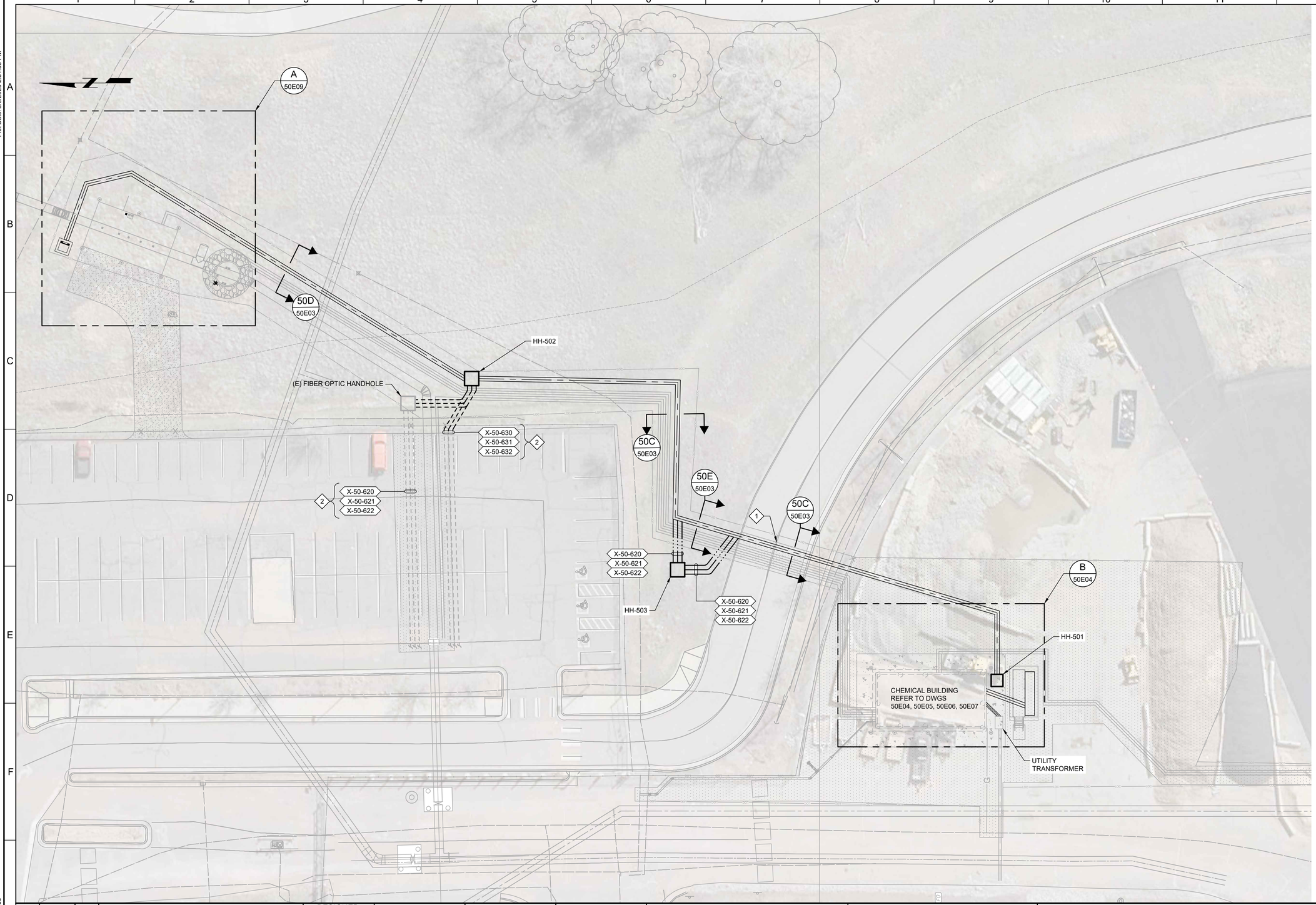

KEY NOTES:

1. MAINTAIN ONE LANE OF TRAFFIC OPEN AT ALL TIMES.
2. EXISTING SPARE CONDUITS IN DUCT BANK FOR FUTURE FIBER CONNECTION BETWEEN CHEMICAL BUILDING AND WES BROWN WTP. EXTEND DUCT BANK TO HH-502 AND CONTINUE CONDUITS TO CHEM BUILDING VIA DUCT BANK 50C.

811 Know what's below. Call before you dig. usanorth811.org

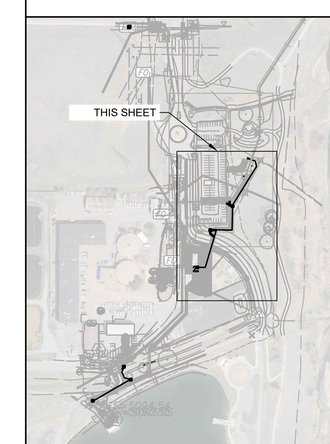

SCALE

0 10' 20' 40'

SCALE: 1" = 20'

Plot Date: 5/6/2026 2:51:05 PM

LAST SAVED BY: FOlivares

REV	DATE	BY	DESCRIPTION
			BID SET

DESIGNED KWG
DRAWN SGH
CHECKED SLB
DATE MAY 2026

COLORADO LICENSED PROFESSIONAL ENGINEER 55107

carollo

THORNTON WATER PROJECT

CITY OF THORNTON - THORNTON WATER PROJECT

CHEMICAL BUILDING AND PRV VAULTS

ELECTRICAL

CHEMICAL BUILDING AND PRV VAULT
OVERALL ELECTRICAL SITE PLAN

VERIFY SCALES
BAR IS ONE INCH ON ORIGINAL DRAWING
0 1"
IF NOT ONE INCH ON THIS SHEET, ADJUST SCALES ACCORDINGLY

JOB NO. 204403
DRAWING NO. 50E01
SHEET NO. 100 OF 168

PROJECT NO. 204403-100000 FILE NAME: 204403_50E01.dwg

PANEL DP-SPE

11/19/2025

LOCATION: Chemical Building and PRV and Meter Vault
VOLTS: 480
PHASE & WIRE: 3 PH 3W
INTERRUPT: 22 KAIC
OPTIONS: SPD

NEMA: 1
FEED: TOP
MTG. SURFACE
BUS RATING: 225
MAIN: CB
MAIN RATING: 225 AF 225 AT

PH A WEIGHTED VA: 42610
PH B WEIGHTED VA: 42610
PH C WEIGHTED VA: 42610
EQUIP SIZING VA: 127830
PANEL AMPS: 153.8

I/C/S	DESCRIPTION	LOAD (VA)	BKR	CIR	Ø	CIR	BKR	LOAD (VA)	DESCRIPTION	I/C/S
C		444		1	A	2				
C	C-EF-1 - EXHAUST FAN NO. 1	444	15A-3P	3	B	4	20A-3P		SPARE	
C		444		5	C	6				
C		2356		7	A	8				
C	C-MAU-1 - MAKEUP AIR UNIT NO. 1	2356	15A-3P	9	B	10	20A-3P		SPARE	
C		2356		11	C	12				
I		24110		13	A	14				
I	HEA-550 - TANKLESS WATER HEATER NO. 1	24110	110A-3P	15	B	16	20A-3P		SPARE	
I		24110		17	C	18				
I		15000		19	A	20				
I	XFMR-SPE - LIGHTING PANEL LP-SPE	15000	125A-3P	21	B	22	20A-3P		SPARE	
I		15000		23	C	24				
				25	A	26				
	SPARE		30A-3P	27	B	28	20A-3P		SPARE	
				29	C	30				
				31	A	32				
	SPARE		20A-3P	33	B	34	20A-3P		SPARE	
				35	C	36				
				37	A	38				
	SPARE		20A-3P	39	B	40	20A-3P		SPARE	
				41	C	42				

PANEL LP-SPE

5/5/2026

LOCATION: Chemical Building and PRV and Meter Vault
VOLTS: 208/120
PHASE & WIRE: 3 PH 4W
INTERRUPT: 10 KAIC
OPTIONS: SPD

NEMA: 1
FEED: TOP
MTG. SURFACE
BUS RATING: 150
MAIN: CB
MAIN RATING: 150 AF 150 AT

PH A WEIGHTED VA: 11297
PH B WEIGHTED VA: 13356
PH C WEIGHTED VA: 11508
EQUIP SIZING VA: 40067
PANEL AMPS: 111.2

I/C/S	DESCRIPTION	LOAD (VA)	BKR	CIR	Ø	CIR	BKR	LOAD (VA)	DESCRIPTION	I/C/S
C	CHEMICAL BUILDING ELECTRICAL ROOM LIGHTING	208	15A-1P	1	A	2	15A-1P	900	CHEMICAL BUILDING STORAGE ROOM RECEPTACLES	I
C	CHEMICAL BUILDING STORAGE ROOM LIGHTING	590	15A-1P	3	B	4	15A-1P	900	CHEMICAL BUILDING ELECTRICAL ROOM RECEPTACLES	I
C	CHEMICAL BUILDING EXTERIOR LIGHTING	310	15A-1P	5	C	6	15A-1P	180	PRV AND METER VAULT RECEPTACLE	I
C	PRV AND METER VAULT LIGHTING	300	15A-1P	7	A	8	15A-1P	360	CHEMICAL BUILDING ROOF RECEPTACLES	I
C	C-HP-1 - ELECTRICAL ROOM OUTDOOR HEAT PUMP UNIT NO. 1	1144	15A-2P	9	B	10	15A-2P	1144	C-HP-2 - ELECTRICAL ROOM OUTDOOR HEAT PUMP UNIT NO. 2	C
C		1144		11	C	12		1144		C
I	ROLL UP DOOR OPERATOR	1176	15A-1P	13	A	14	15A-1P	696	PMP-520 - SPE FEED PUMP NO. 1 RECEPTACLE	I
I	PMP-505 - SPE TRANSFER PUMP	1176	15A-1P	15	B	16	15A-1P	696	PMP-530 - SPE FEED PUMP NO. 2 RECEPTACLE	I
I	LCP-500 - SUMP PUMP LCP	2020	25A-1P	17	C	18	15A-1P	696	PMP-540 - SPE FEED PUMP NO. 3 RECEPTACLE	I
I	PMP-621 - ANALYZER SAMPLE SUMP PUMP RECEPTACLE	696	15A-1P	19	A	20	15A-1P	500	PCM-SPE - CHEMICAL BUILDING PCM PANEL COMPONENTS	C
I	PMP-610 - PRV AND METER VAULT SUMP PUMP	1176	15A-1P	21	B	22	15A-1P	696	PMP-622 - SAMPLE PUMP RECEPTACLE	I
I	HTU-551 - FREEZELESS SAFETY SHOWER	120	15A-1P (5)	23	C	24	15A-1P	1000	ACP-SPE - CHEMICAL BUILDING ACCESS CONTROL PANEL	I
I	DDC-SPE - CHEMICAL BUILDING HVAC CONTROLLER	1000	15A-1P	25	A	26	15A-1P	1000	VCP-FA - CHEMICAL BUILDING FIRE ALARM CONTROL PANEL	I
I		3334		27	B	28	15A-1P	228	C-GUH-1 - GAS UNIT HEATER NO. 1	C
I	UPS-SPE - CHEM BUILDING UPS	3334	60A-3P	29	C	30	15A-1P	228	C-GUH-2 - GAS UNIT HEATER NO. 2	C
I		3334		31	A	32	15A-1P	200	C-SD-1 - RTU SMOKE DETECTOR	C
C		500		33	B	34	15A-1P	696	EF-601 - PRV VAULT EXHAUST FAN	C
C	GEN-SPE - GENERATOR ACCESSORY POWER	500	15A-3P	35	C	36	15A-1P		SPARE	
C		500		37	A	38	20A-1P		SPARE	
	SPARE		20A-1P	39	B	40	20A-1P		SPARE	
	SPARE		20A-1P	41	C	42	20A-1P		SPARE	

PANEL LP-SPE-UPS

1/20/2026

LOCATION: Chemical Building and PRV and Meter Vault
VOLTS: 208/120
PHASE & WIRE: 3 PH 4W
INTERRUPT: 65 KAIC
OPTIONS: SPD

NEMA: 1
FEED: TOP
MTG. SURFACE
BUS RATING: 100
MAIN: CB
MAIN RATING: 100 AF 100 AT

PH A WEIGHTED VA: 3001
PH B WEIGHTED VA: 1126
PH C WEIGHTED VA: 1126
EQUIP SIZING VA: 9004
PANEL AMPS: 25.0

I/C/S	DESCRIPTION	LOAD (VA)	BKR	CIR	Ø	CIR	BKR	LOAD (VA)	DESCRIPTION	I/C/S
C	PCM-SPE - CHEMICAL BUILDING PCM	1500	20A-1P	1	A	2		901		C
	SPARE		20A-1P	3	B	4	15A-3P	901	PRV-600 - SLEEVE VALVE	C
	SPARE		20A-1P	5	C	6		901		C
	SPARE		20A-1P	7	A	8	20A-1P		SPARE	
	SPARE		20A-1P	9	B	10	20A-1P		SPARE	
	SPARE		20A-1P	11	C	12	20A-1P		SPARE	
	SPARE		20A-1P	13	A	14	20A-1P		SPARE	
	SPARE		20A-1P	15	B	16	20A-1P		SPARE	
	SPARE		20A-1P	17	C	18	20A-1P		SPARE	
	SPARE		20A-1P	19	A	20	20A-1P		SPARE	
	SPARE		20A-1P	21	B	22	20A-1P		SPARE	
	SPARE		20A-1P	23	C	24	20A-1P		SPARE	
	SPARE		20A-1P	25	A	26	20A-1P		SPARE	
	SPARE		20A-1P	27	B	28	20A-1P		SPARE	
	SPARE		20A-1P	29	C	30	20A-1P		SPARE	

KEY NOTES:

1. UL LISTED AS SERVICE ENTRANCE RATED. BOND NEUTRAL BUS TO EQUIPMENT GROUND BUS.
2. BOND GENERATOR NEUTRAL BUS TO EQUIPMENT GROUND BUS.
3. CTs AND METER-SOCKET ARE UTILITY PROVIDED AND CONTRACTOR INSTALLED. CONTRACTOR TO PROVIDE AND INSTALL CONDUCTORS. CONTRACTOR TO TERMINATE LINE-SIDE AND LOAD-SIDE CONDUCTORS IN CT CABINET.
4. UTILITY TO PROVIDE TRANSFORMER. CONTRACTOR TO PROVIDE CONDUCTORS TO UTILITY TRANSFORMER SECONDARY CONNECTION CABINET. UTILITY TO TERMINATE CONDUCTORS.
5. PROVIDE GFPE BREAKER FOR FREEZELESS SAFETY SHOWER.
6. 150 kVA TRANSFORMER, 1.6 %Z, 11.2 kA AVAILABLE FAULT AT SECONDARY.

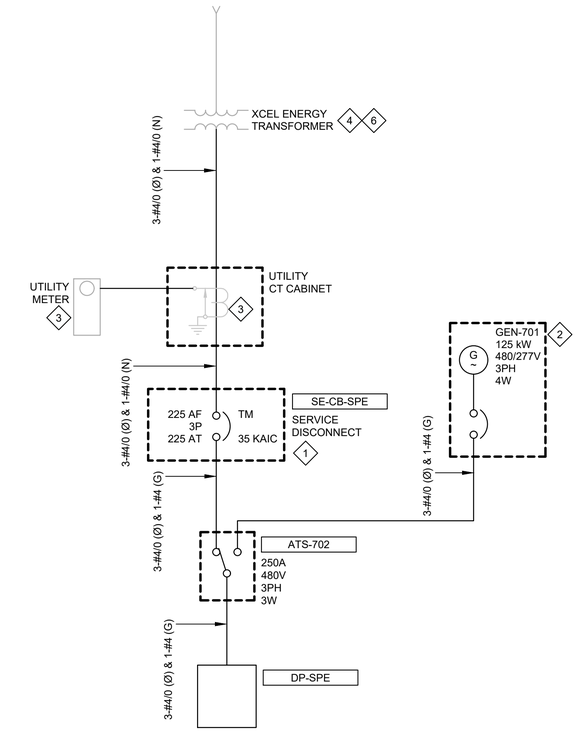

ONE-LINE DIAGRAM

A - DETAIL
SCALE: NO SCALE

REV	DATE	BY	DESCRIPTION
			BID SET

DESIGNED KWG
DRAWN SGH
CHECKED SLB
DATE MAY 2026

COLORADO LICENSED
KEITH W. CAROLLO
55107
Digitally signed by Keith W Carollo
Contact Info: Carollo Engineers
Date: 2026.05.08 08:31:17 -06'00'
PROFESSIONAL ENGINEER

CITY OF THORNTON - THORNTON WATER PROJECT
CHEMICAL BUILDING AND PRV VAULTS
ELECTRICAL
CHEMICAL BUILDING AND PRV VAULT PANELBOARD SCHEDULES AND ONE-LINE DIAGRAM

VERIFY SCALES
BAR IS ONE INCH ON ORIGINAL DRAWING
0 1"
IF NOT ONE INCH ON THIS SHEET, ADJUST SCALES ACCORDINGLY

JOB NO. 204403
DRAWING NO. 50E02
SHEET NO. 101 OF 168

$$$$DATE$$$$
$$$$USER$$$$
$$$$PLOT_INFO$$$$
LAST SAVED BY: dmacari

PROJECT NO. 200417-100000 FILE NAME: 20041750E07.dgn

GENERAL NOTES:

1. CONSTRUCT DUCT BANK PER DETAIL EM001/TYP UNLESS OTHERWISE INDICATED.

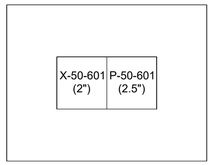

WIDTH: 1'-8"
HEIGHT: 1'-6"

50A DUCT BANK SECTION

50E04, 50E06

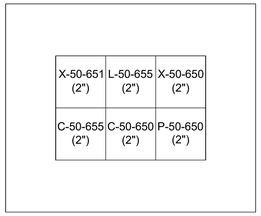

WIDTH: 1'-11"
HEIGHT: 1'-9"

50B DUCT BANK SECTION

50E04, 50E06

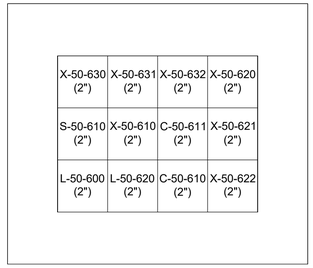

WIDTH: 2'-4"
HEIGHT: 2'-2"

50C DUCT BANK SECTION

50E01, 50E04, 50E06

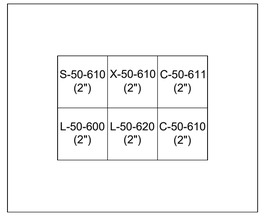

WIDTH: 1'-11"
HEIGHT: 1'-9"

50D DUCT BANK SECTION

50E01, 50E09

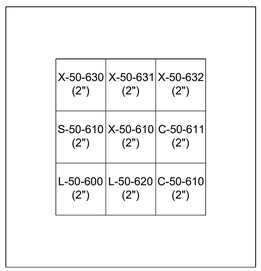

WIDTH: 1'-11"
HEIGHT: 2'-2"

50E DUCT BANK SECTION

50E01

REV	DATE	BY	DESCRIPTION
			BID SET

DESIGNED KWG
DRAWN SGH
CHECKED SLB
DATE MAY 2026

COLORADO LICENSED
KELLEN GROSS
55107
PROFESSIONAL ENGINEER

carollo

THORNTON WATER PROJECT

CITY OF THORNTON - THORNTON WATER PROJECT

CHEMICAL BUILDING AND PRV VAULTS

ELECTRICAL

CHEMICAL BUILDING AND PRV VAULT
DUCT BANK SECTIONS

VERIFY SCALES
BAR IS ONE INCH ON ORIGINAL DRAWING
0 1"
IF NOT ONE INCH ON THIS SHEET, ADJUST SCALES ACCORDINGLY

JOB NO. 204403
DRAWING NO. 50E03
SHEET NO. 102 OF 168

PROJECT NO. 200417-100000 FILE NAME: 20041750E08.dgn

LAST SAVED BY: AHendricks
$$$$PLOT_INFO$$$$
$$$$USER$$$$
$$$$DATE$$$$

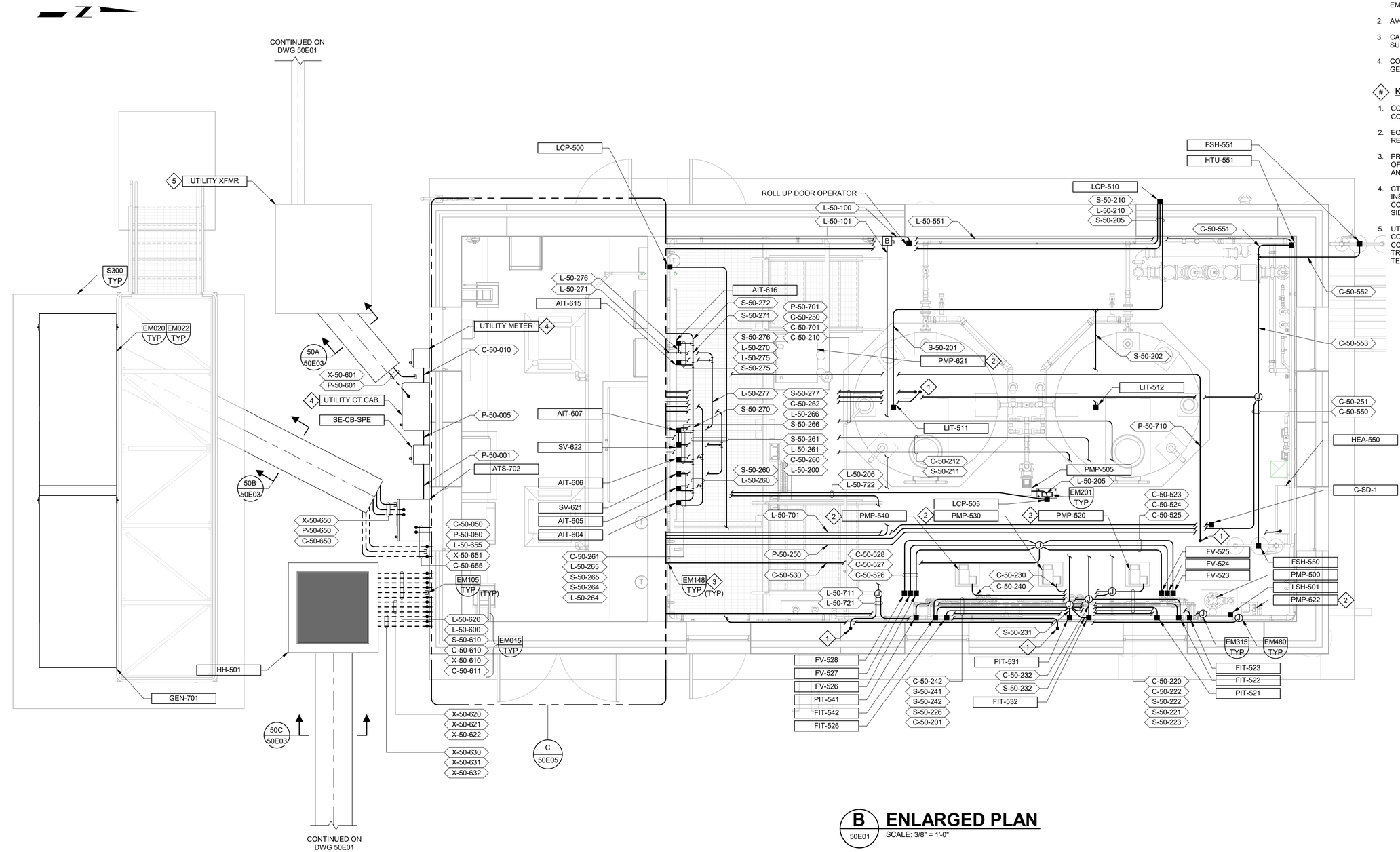

B ENLARGED PLAN
B / 50E01
SCALE: 3/8" = 1'-0"

GENERAL NOTES:

1. ROUTE EXPOSED CONDUITS PER DETAIL EA010/TYP, EA080/TYP, EM102/TYP, AND EM103/TYP AS NECESSARY.
2. AVOID ROUTING CONDUITS WITHIN THE CONTAINMENT AREA.
3. CABLE AND CONDUIT FOR HVAC CONTROL IS BY HVAC SUBCONTRACTOR AND NOT SHOWN ON ELECTRICAL PLANS.
4. COORDINATE WITH CITY TO OBTAIN IL-101 KEY REQUIREMENTS FOR GENERATOR AND OUTDOOR PANELS.

KEY NOTES:

1. CONDUITS ROUTE TO EQUIPMENT ON ROOF. SEE 50E08 FOR CONTINUATION.
2. EQUIPMENT POWERED FROM RECEPTACLE. SEE 50E06 FOR RECEPTACLE LOCATIONS.
3. PROVIDE NON-DESTRUCTIVE TESTING TO DETERMINE LOCATIONS OF REINFORCEMENT. MAINTAIN A MIN 2" CLEAR BETWEEN OPENING AND REINFORCEMENT.
4. CTs AND METER-SOCKET ARE UTILITY PROVIDED AND CONTRACTOR INSTALLED. CONTRACTOR TO PROVIDE AND INSTALL CONDUIT AND CONDUCTORS. CONTRACTOR TO TERMINATE LINE-SIDE AND LOAD-SIDE CONDUCTORS IN THE CT CABINET.
5. UTILITY TO PROVIDE TRANSFORMER AND TRANSFORMER PAD. COORDINATE WITH UTILITY FOR DUCT BANK RISER LOCATION. CONTRACTOR TO PROVIDE CONDUIT AND CONDUCTORS TO UTILITY TRANSFORMER SECONDARY CONNECTION CABINET. UTILITY TO TERMINATE CONDUCTORS.

REV	DATE	BY	DESCRIPTION
			BID SET

DESIGNED KWG
DRAWN SGH
CHECKED SLB
DATE MAY 2026

COLORADO LICENSED KRISTEN GARDNER 55107 PROFESSIONAL ENGINEER

carollo

THORNTON WATER PROJECT

CITY OF THORNTON-THORNTON WATER PROJECT
CHEMICAL BUILDING AND PRV VAULTS
ELECTRICAL
CHEMICAL BUILDING LOWER FLOOR POWER AND CONTROL PLAN

VERIFY SCALES
BAR IS ONE INCH ON ORIGINAL DRAWING
0 1"
IF NOT ONE INCH ON THIS SHEET, ADJUST SCALES ACCORDINGLY

JOB NO. 204403
DRAWING NO. 50E04
SHEET NO. 103 OF 167

PLOT DATE: 4/1/2026 2:55:06 PM

FILE NAME: R:\d0583957\204403_50E0801.rvt

GENERAL NOTES:

1. ROUTE EXPOSED CONDUITS PER DETAIL EA010/TYP, EA080/TYP, EM102/TYP, AND EM103/TYP AS NECESSARY.
2. CABLE AND CONDUIT FOR HVAC CONTROL IS BY HVAC SUBCONTRACTOR AND NOT SHOWN ON ELECTRICAL PLANS.

KEY NOTES:

1. AIR HANDLING UNIT POWERED FROM HEAT PUMP ON ROOF. INTERCONNECTING CONDUIT AND CONDUCTORS FURNISHED BY HVAC SUBCONTRACTOR.
2. 45 KVA DELTA-WYE 3-PHASE TRANSFORMER. 480V PRIMARY, 120/208V SECONDARY.
3. PROVIDE NON-DESTRUCTIVE TESTING TO DETERMINE LOCATION OF REINFORCEMENT. MAINTAIN A MIN 2" CLEAR BETWEEN OPENING AND REINFORCEMENT.

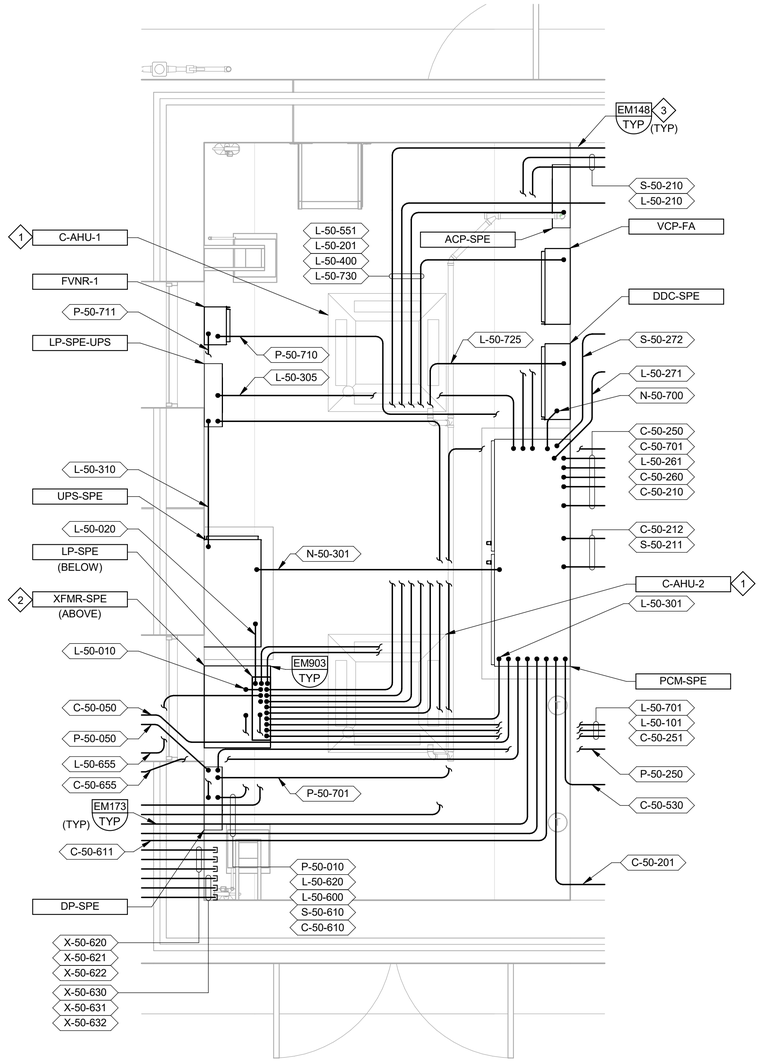

C 50E04 **ENLARGED PLAN**
SCALE: 1/2" = 1'-0"

REV	DATE	BY	DESCRIPTION
			BID SET

DESIGNED KWG
DRAWN SGH
CHECKED SLB
DATE MAY 2026

COLORADO LICENSED KELLEN GROSS 55107 PROFESSIONAL ENGINEER

carollo

THORNTON WATER PROJECT

CITY OF THORNTON-THORNTON WATER PROJECT
CHEMICAL BUILDING AND PRV VAULTS
ELECTRICAL
CHEMICAL BUILDING LOWER FLOOR
ENLARGED POWER AND CONTROL PLAN

VERIFY SCALES
BAR IS ONE INCH ON ORIGINAL DRAWING
0 1"
IF NOT ONE INCH ON THIS SHEET, ADJUST SCALES ACCORDINGLY

JOB NO. 204403
DRAWING NO. 50E05
SHEET NO. 104 OF 167

PLOT DATE: 4/1/2026 2:55:07 PM

FILE NAME: R:\d0583957\204403_50E0801.rvt

GENERAL NOTES:

1. ROUTE EXPOSED CONDUITS PER DETAIL EA010/TYP, EA080/TYP, EM102/TYP, AND EM103/TYP AS NECESSARY.
2. AVOID ROUTING CONDUITS WITHIN THE CONTAINMENT AREA.

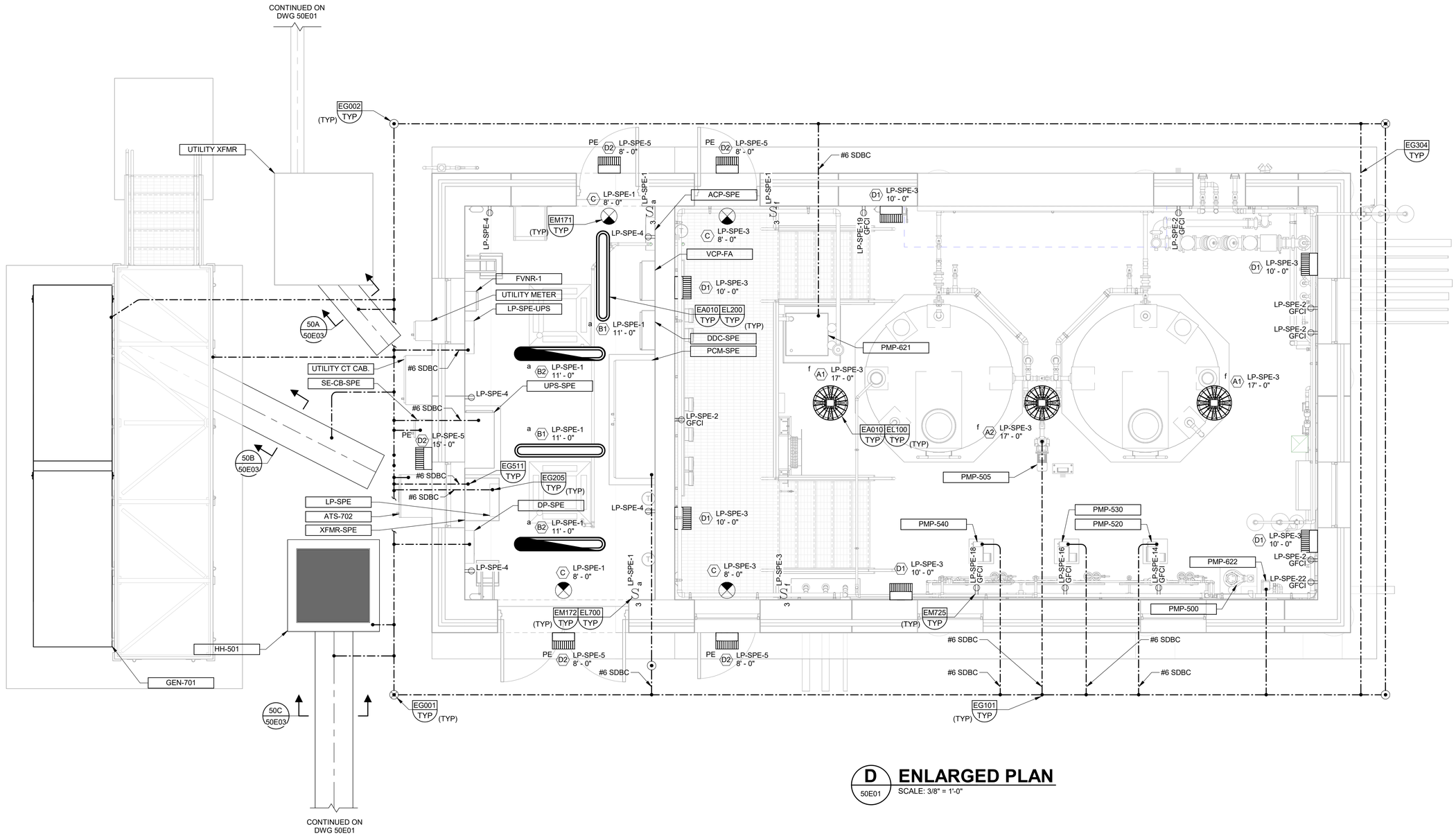

D ENLARGED PLAN

D / 50E01

SCALE: 3/8" = 1'-0"

REV	DATE	BY	DESCRIPTION
			BID SET

DESIGNED KWG
DRAWN SGH
CHECKED SLB
DATE MAY 2026

COLORADO LICENSED — KELLEN GROSS — 55107 — PROFESSIONAL ENGINEER

CITY OF THORNTON-THORNTON WATER PROJECT

CHEMICAL BUILDING AND PRV VAULTS

CHEMICAL BUILDING LOWER FLOOR LIGHTING, RECEPTACLE, AND GROUNDING PLAN

VERIFY SCALES
BAR IS ONE INCH ON ORIGINAL DRAWING
0 — 1"
IF NOT ONE INCH ON THIS SHEET, ADJUST SCALES ACCORDINGLY

JOB NO. 204403
DRAWING NO. 50E06
SHEET NO. 105 OF 167

PLOT DATE: 4/1/2026 2:55:10 PM

FILE NAME: R:\d0583957\204403_50E0801.rvt

GENERAL NOTES:

1. INSTALL DOOR SECURITY COMPONENTS PER ES91A/TYP, ES91B/TYP, OR ES92A/TYP, AS INDICATED HEREIN. ACCESS CONTROL VENDOR TO PROVIDE AND INSTALL CONDUCTORS AND TERMINATIONS.
2. ROUTE EXPOSED CONDUITS PER EA010/TYP, EA080/TYP, EM102/TYP, AND EM103/TYP AS NECESSARY.
3. PROVIDE SHIELDED SURGE PROTECTION AT CAMERA LOCATIONS. REFERENCE 04N50 FOR CONNECTIONS.

KEY NOTES:

1. CAMERA LOCATED ON ROOF WITH EXTENSION ARM.
2. ROUTE CONDUIT IN MASONRY WALL. MAINTAIN MIN 2" CLEAR BETWEEN OPENING AND REINFORCEMENT.
3. FIRE ALARM SYSTEM COMPONENTS AND CONDUIT/WIRE ARE BY FIRE ALARM SYSTEM SUPPLIER AND NOT SHOWN HERE. SEE SPECIFICATION 21 13 14 FOR ADDITIONAL DETAILS.

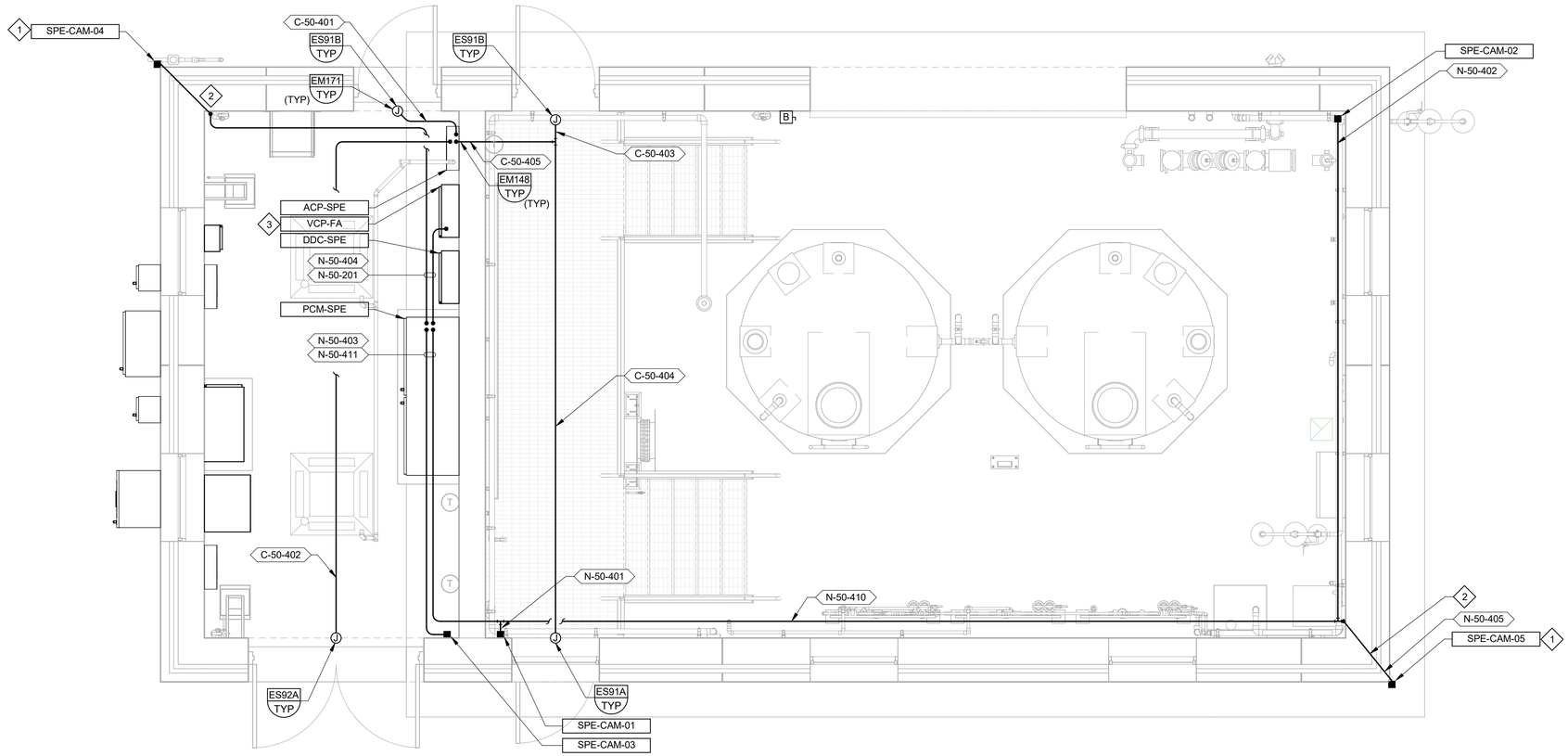

E ENLARGED PLAN

50E01

SCALE: 3/8" = 1'-0"

REV	DATE	BY	DESCRIPTION
			BID SET

DESIGNED KWG
DRAWN SGH
CHECKED SLB
DATE APRIL 2026

COLORADO LICENSED PROFESSIONAL ENGINEER KELLEN GROSS 55107

carollo

THORNTON WATER PROJECT

CITY OF THORNTON-THORNTON WATER PROJECT

CHEMICAL BUILDING AND PRV VAULTS

CHEMICAL BUILDING SECURITY SYSTEMS AND FIRE ALARM PLAN

VERIFY SCALES
BAR IS ONE INCH ON ORIGINAL DRAWING
0 1"
IF NOT ONE INCH ON THIS SHEET, ADJUST SCALES ACCORDINGLY

JOB NO. 204403
DRAWING NO. 50E07
SHEET NO. 106 OF 167

PLOT DATE: 5/5/2026 1:18:16 PM

FILE NAME: R:\d0583957\204403_50E0801.rvt

GENERAL NOTES:

1. PROVIDE LIGHTNING PROTECTION SYSTEM PER SPECIFICATION 26 41 01. ROUTE ALL LIGHTNING PROTECTION DOWNLEADS CONCEALED INSIDE CMU WALL. COORDINATE WITH CONTRACTOR DURING CONSTRUCTION.

KEY NOTES:

1. SEE DWG 50E07 FOR CONTINUATION.

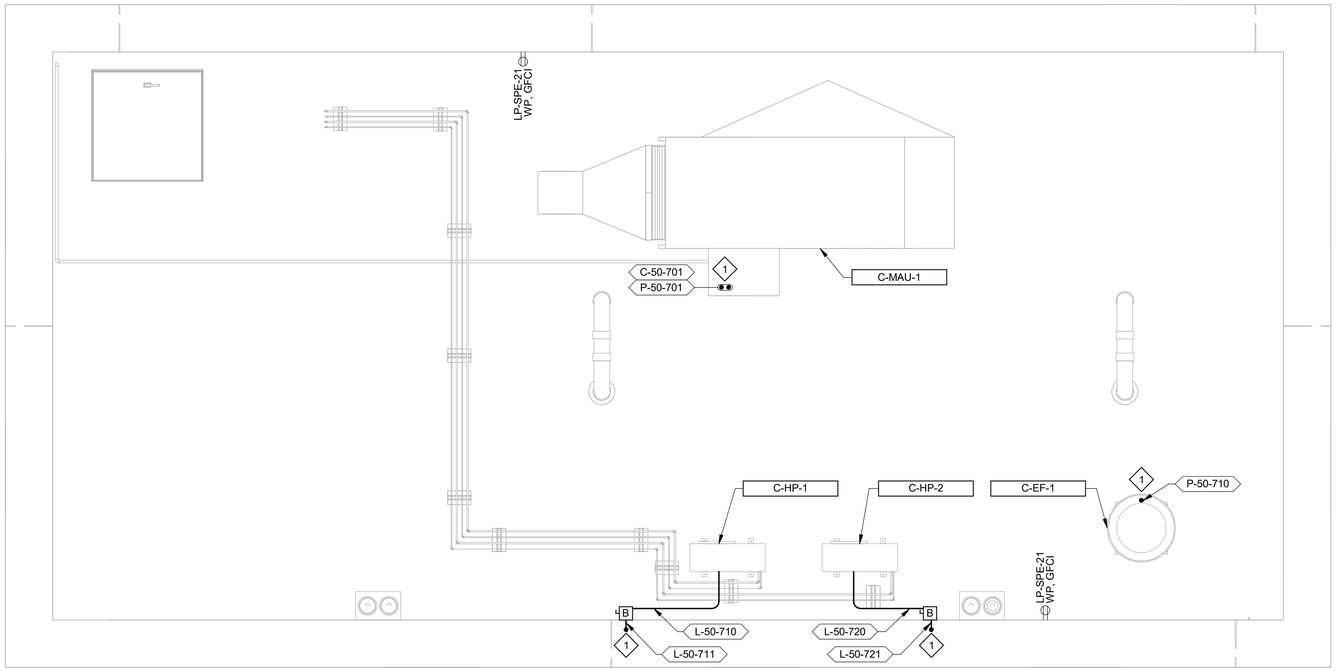

F ENLARGED PLAN

50E03

SCALE: 3/8" = 1'-0"

REV	DATE	BY	DESCRIPTION
			BID SET

DESIGNED KWG
DRAWN SGH
CHECKED SLB
DATE MAY 2026

COLORADO LICENSED
KELLEN GROSS
55107
Digitally signed by Kellen W Gross
Contact Info: Carollo Engineers, P.C.
Date: 2026.05.08 14:32:54 -06'00'
PROFESSIONAL ENGINEER

CITY OF THORNTON-THORNTON WATER PROJECT
CHEMICAL BUILDING AND PRV VAULTS
CHEMICAL BUILDING ROOF PLAN

VERIFY SCALES
BAR IS ONE INCH ON ORIGINAL DRAWING
0 1"
IF NOT ONE INCH ON THIS SHEET, ADJUST SCALES ACCORDINGLY

JOB NO. 204403
DRAWING NO. 50E08
SHEET NO. 107 OF 167

PLOT DATE: 4/1/2026 2:55:12 PM

FILE NAME: R:\d0583957\204403_50E0801.rvt

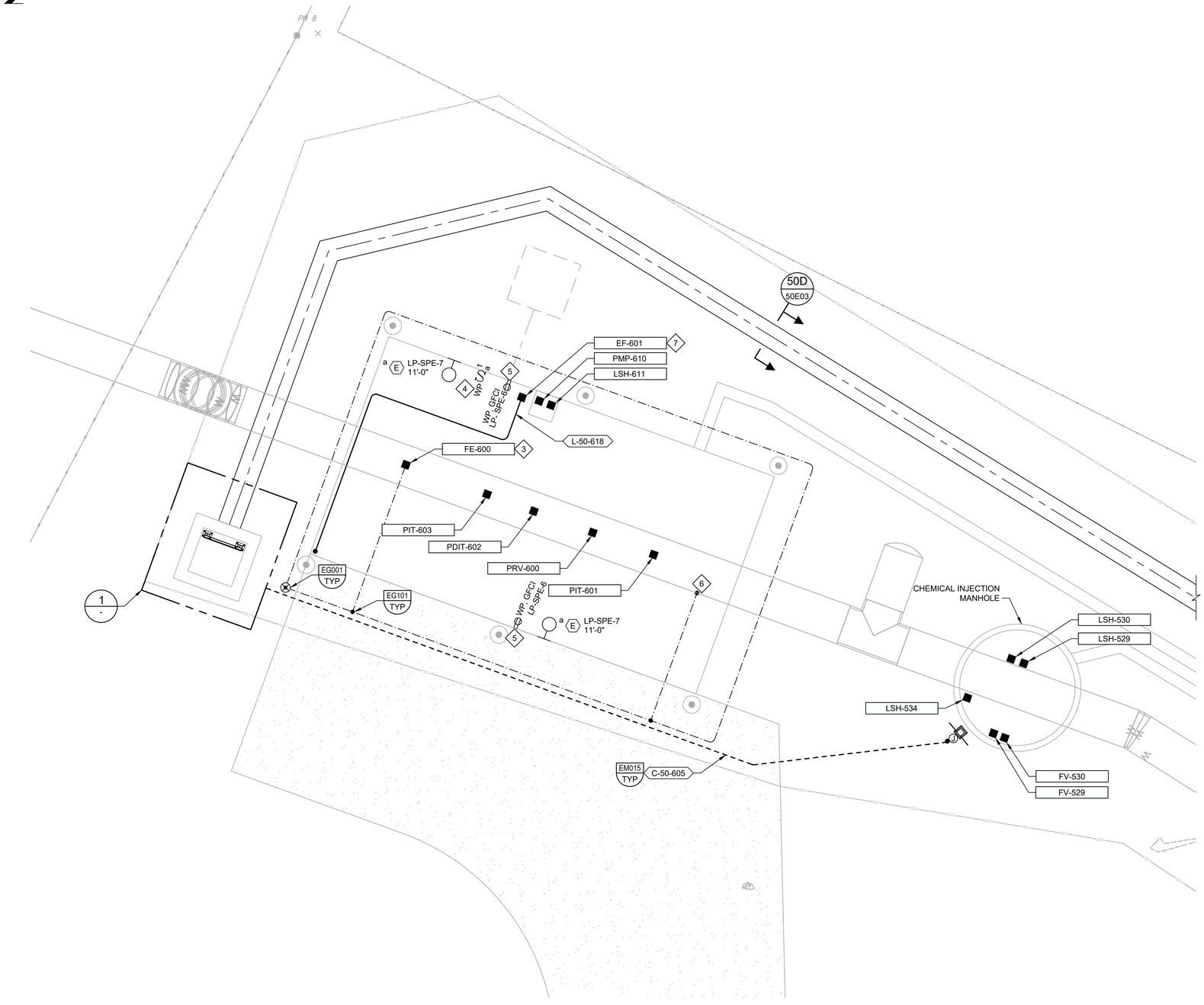

A 50E01 **ENLARGED PLAN**
SCALE: 1" = 5'
FILE: 20041750E0101

0 2.5' 5' 10'
SCALE: 1" = 5'

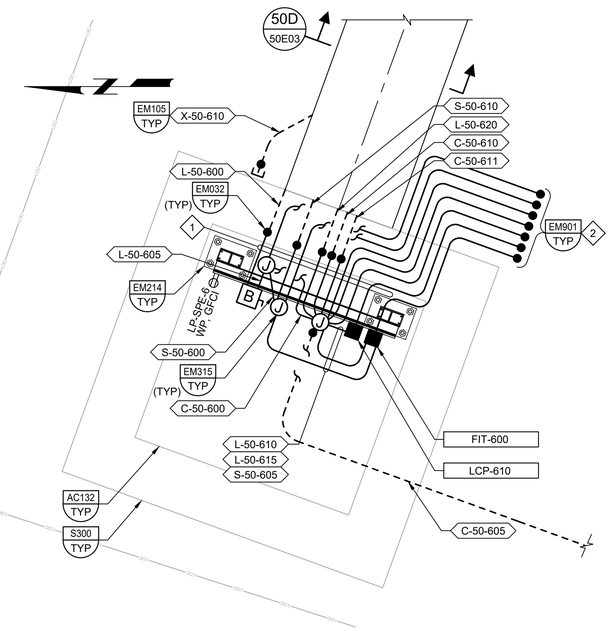

1 - **DETAIL**
SCALE: 3/4" = 1'-0"
FILE: 20041750E0101

0 6" 1' 2'

KEY NOTES:

1. CONCEAL SUBMERSIBLE CABLES ON EQUIPMENT RACK IN A CABLE TRAY TO PROTECT FROM VANDALISM.
2. PROVIDE NON-DESTRUCTIVE TESTING TO DETERMINE LOCATIONS OF REINFORCEMENT. MAINTAIN MIN 2" CLEARANCE BETWEEN OPENING AND REINFORCEMENT.
3. GROUND MAG METER PER DETAIL NF132/TYP. PROVIDE DIELECTRIC CONNECTION PER CATHODIC PROTECTION REQUIREMENTS.
4. INSTALL SWITCH 12" BELOW HATCH OPENING.
5. INSTALL RECEPTACLE 48" ABOVE FINISHED FLOOR.
6. PROVIDE GROUND CONNECTION UPSTREAM OF FLANGE ISOLATION KITS.
7. VENTILATION FAN SHALL BE AS MANUFACTURED BY ILG, OR AN APPROVED EQUIVALENT, MODEL PTD DIRECT-DRIVE TUBEAXIAL DUCT FAN SIZE PTD 123 (811 CFM @ 3/8" S.P.) WITH A ONE-SIXTH (1/6) HP, 120V CONSTANT SPEED SINGLE PHASE, 60HZ ELECTRIC MOTOR. CONTROL SWITCH FOR THE FAN SHALL BE MOUNTED NEXT TO THE ENTRYWAY SO THAT IT CAN BE OPERATED WITHOUT COMPLETELY ENTERING THE VAULT. THE DISCHARGE OF THE VENT FAN SHALL BE TOTALLY ENCLOSED AND ATTACHED TO THE OPENING OF THE EXHAUST VENT PIPE.

REV	DATE	BY	DESCRIPTION
			BID SET

DESIGNED KWG
DRAWN SGH
CHECKED SLB
DATE MAY 2026

COLORADO LICENSED
KRISTEN GROAT
55107
PROFESSIONAL ENGINEER

carollo

THORNTON WATER PROJECT

CITY OF THORNTON - THORNTON WATER PROJECT
CHEMICAL BUILDING AND PRV VAULTS
ELECTRICAL
PRV VAULT DETAIL PLAN

VERIFY SCALES
BAR IS ONE INCH ON ORIGINAL DRAWING
0 1"
IF NOT ONE INCH ON THIS SHEET, ADJUST SCALES ACCORDINGLY

JOB NO. 204403
DRAWING NO. 50E09
SHEET NO. 108 OF 168

LAST SAVED BY: FOlivares

PROJECT NO. 204403-100000 FILE NAME: 204403_50E09.dwg

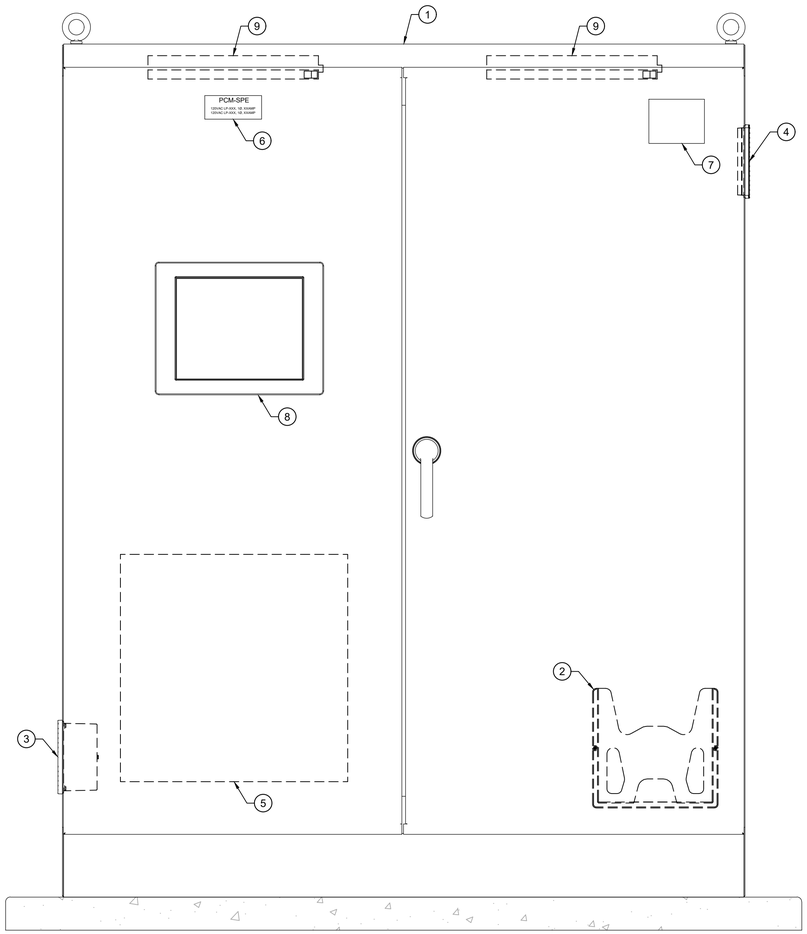

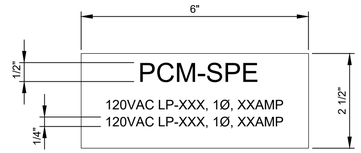

NAMEPLATE SCHEDULE
PCM-SPE

MAJOR EQUIPMENT SCHEDULE	
ITEM	DESCRIPTION
1	ENCLOSURE, NEMA 12, FREE STANDING
2	DATA POCKET
3	COOLING FAN
4	EXHAUST GRILLE
5	FOLDING SHELF
6	NAMEPLATE
7	MANUFACTURER'S LABEL
8	LOCAL OPERATOR INTERFACE
9	LIGHT W/ INTRUSION SWITCH

GENERAL NOTES:

1. PROVIDE LABEL INDICATING INTEGRATOR'S LOGO WITH COMPANY NAME AND ADDRESS MOUNTED ON THE FRONT OF THE ENCLOSURE.
2. FOLLOW ALL UL 508 AND 508A SUPPLEMENT SB TO DETERMINE SHORT CIRCUIT RATINGS.
3. REFER TO ELECTRICAL PLANS FOR LOCATION OF ALL ENCLOSURES.
4. SECURE ENCLOSURE TO FLOOR FOLLOWING MANUFACTURER'S RECOMMENDATIONS. ADHERE TO ALL SEISMIC INSTALLATION REQUIREMENTS FOR THE APPROPRIATE LOCATIONS.
5. ALL ENCLOSURES SHALL BE MOUNTED ON A HOUSEKEEPING PAD.

KEY NOTES:

1. ESTIMATED SIZE, FINAL SIZE BY CONTRACTOR.

REV	DATE	BY	DESCRIPTION
			BID SET

DESIGNED RG
DRAWN DBC
CHECKED JM
DATE MAY 2026

COLORADO LICENSED
KELLEN GROSS
55107
PROFESSIONAL ENGINEER

carollo®

THORNTON WATER PROJECT

CITY OF THORNTON - THORNTON WATER PROJECT
CHEMICAL BUILDING AND PRV VAULTS
INSTRUMENTATION
CHEMICAL BUILDING - EXTERNAL PANEL ELEVATION

VERIFY SCALES
BAR IS ONE INCH ON ORIGINAL DRAWING
0 1"
IF NOT ONE INCH ON THIS SHEET, ADJUST SCALES ACCORDINGLY

JOB NO. 204403
DRAWING NO. 02N01
SHEET NO. 109 OF 168

LAST SAVED BY: DCosme

PROJECT NO. 204403-100000 FILE NAME: 204403_02N01.dwg

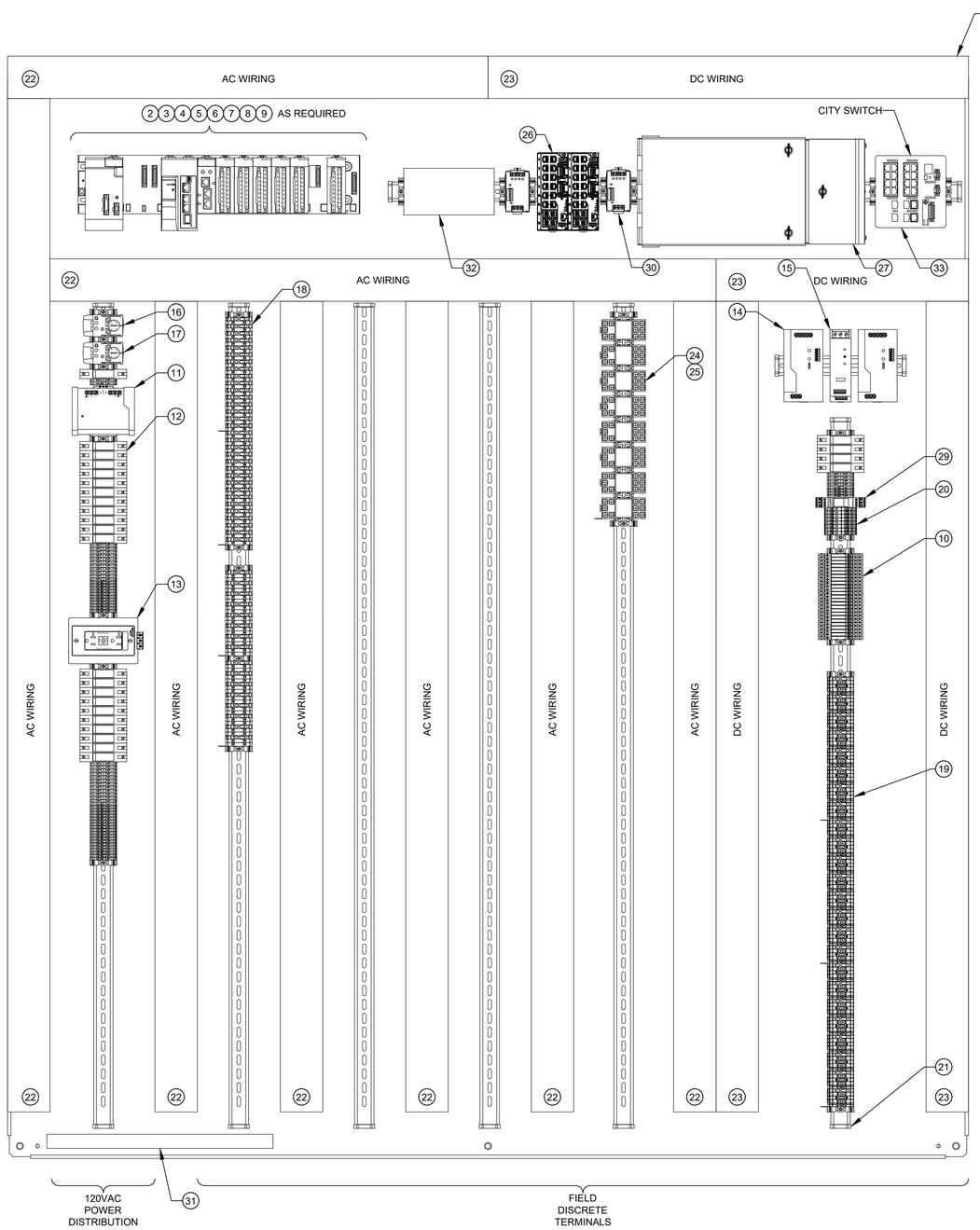

GENERAL NOTES:

1. ENCLOSURE DRAWING REPRESENTS DESIGN INTENT. CONTRACTOR TO SUPPLY AS-BUILT DRAWINGS SHOWING FINAL ENCLOSURE LAYOUT WITH ALL EQUIPMENT, MANUFACTURERS, AND PART NUMBERS.
2. REFER TO ELECTRICAL PLANS FOR LOCATION OF ALL ENCLOSURES. CONSTRUCT PANEL TO MEET THE FULL INTENT OF ARTICLE 409 OF THE NATIONAL ELECTRIC CODE.
3. FOLLOW ALL UL 508 AND 508A SUPPLEMENT SB TO DETERMINE SHORT CIRCUIT RATINGS.
4. CIRCUIT BREAKERS SHALL BE COORDINATED TO TRIP BRANCH CIRCUIT BREAKER PRIOR TO THE MAIN PANEL CIRCUIT BREAKER.
5. ALL TIE WRAPS SHALL BE LOCATED OUTSIDE OF THE WIRE DUCTS. INSTALLATION OF ALL NYLON TIE WRAPS SHALL BE TENSIONED AND TRIMMED FLUSH.
6. ELEVATE ALL TERMINAL BLOCK DIN RAIL A MINIMUM OF 2 INCHES OFF OF BACK PANEL.
7. NO 480VAC CIRCUITS SHALL TERMINATE IN OR PASS THROUGH CONTROL CABINETS.
8. NO CAMERA OR TELEPHONE CABLES SHALL TERMINATE IN OR PASS THROUGH CONTROL CABINETS.
9. ALL CONDUIT PENETRATIONS SHALL BE LOCATED AT THE TOP OR BOTTOM OF THE ENCLOSURE. NO SIDE, FRONT, OR REAR PENETRATIONS ALLOWED.
10. QUANTITY OF COMPONENTS VARY AS REQUIRED FOR EACH CABINET.
11. REFER TO INSTRUMENTATION TYPICAL DETAILS FOR PANEL CONSTRUCTION AND WIRING REQUIREMENTS.
12. PROVIDE PANEL SURGE PROTECTION FOR ALL ANALOG/DIGITAL INSTRUMENTS LOCATED OUTDOORS OR OTHERWISE INDICATED IN THE DRAWING OR SPECIFICATIONS.
13. REFER TO TYPICAL DETAILS NE101, NE102, NE103, NE104, NE105, NE304, NE305, NE306, NE307, NE308, NE310, NE311, NE312, NE313, NE314, NE315, NE350, NE351, NE352, NE353, NE354.

MAJOR EQUIPMENT SCHEDULE

ITEM	DESCRIPTION
1	BACK PANEL
2	PLC BACKPLANE
3	PLC PROCESSOR
4	PLC POWER SUPPLY
5	PLC ETHERNET COMMUNICATION MODULES
6	PLC DI MODULES
7	PLC DO MODULES
8	PLC AI MODULES
9	PLC AO MODULES
10	SIGNAL CONDITIONERS
11	120VAC PANEL SURGE PROTECTOR
12	CIRCUIT BREAKERS
13	GFCI RECEPTACLE, 5A
14	24VDC POWER SUPPLY
15	REDUNDANCY MODULE
16	HVAC CONTROL
17	ENCLOSURE TEMPERATURE SWITCH
18	DISCRETE TERMINAL BLOCKS
19	ANALOG TERMINAL BLOCKS
20	24VDC FUSED TERMINAL BLOCKS
21	DIN RAIL
22	GRAY WIRE DUCT
23	WHITE WIRE DUCT
24	TIMER/CONTROL RELAYS
25	INTERPOSING RELAYS
26	SCADA NETWORK SWITCH
27	FIBER PATCH PANEL (BY OTHERS)
28	(NOT USED)
29	24VDC PANEL SURGE PROTECTOR
30	ELECTRONIC CIRCUIT PROTECTOR
31	GROUND BAR
32	CELLULAR MODEM WITH FIREWALL SECURITY
33	CITY ETHERNET SWITCH

REV	DATE	BY	DESCRIPTION
			BID SET

DESIGNED RG
DRAWN DBC
CHECKED JM
DATE MAY 2026

COLORADO LICENSED PROFESSIONAL ENGINEER 55107 KELLEN GROSS

carollo

THORNTON WATER PROJECT

CITY OF THORNTON - THORNTON WATER PROJECT

CHEMICAL BUILDING AND PRV VAULTS

INSTRUMENTATION

CHEMICAL BUILDING - PCM-SPE INTERNAL PANEL ELEVATION

VERIFY SCALES
BAR IS ONE INCH ON ORIGINAL DRAWING
0 1"
IF NOT ONE INCH ON THIS SHEET, ADJUST SCALES ACCORDINGLY

JOB NO. 204403
DRAWING NO. 02N02
SHEET NO. 110 OF 168

LAST SAVED BY: CRollins

PROJECT NO. 204403-100000 FILE NAME: 204403_02N02.dwg

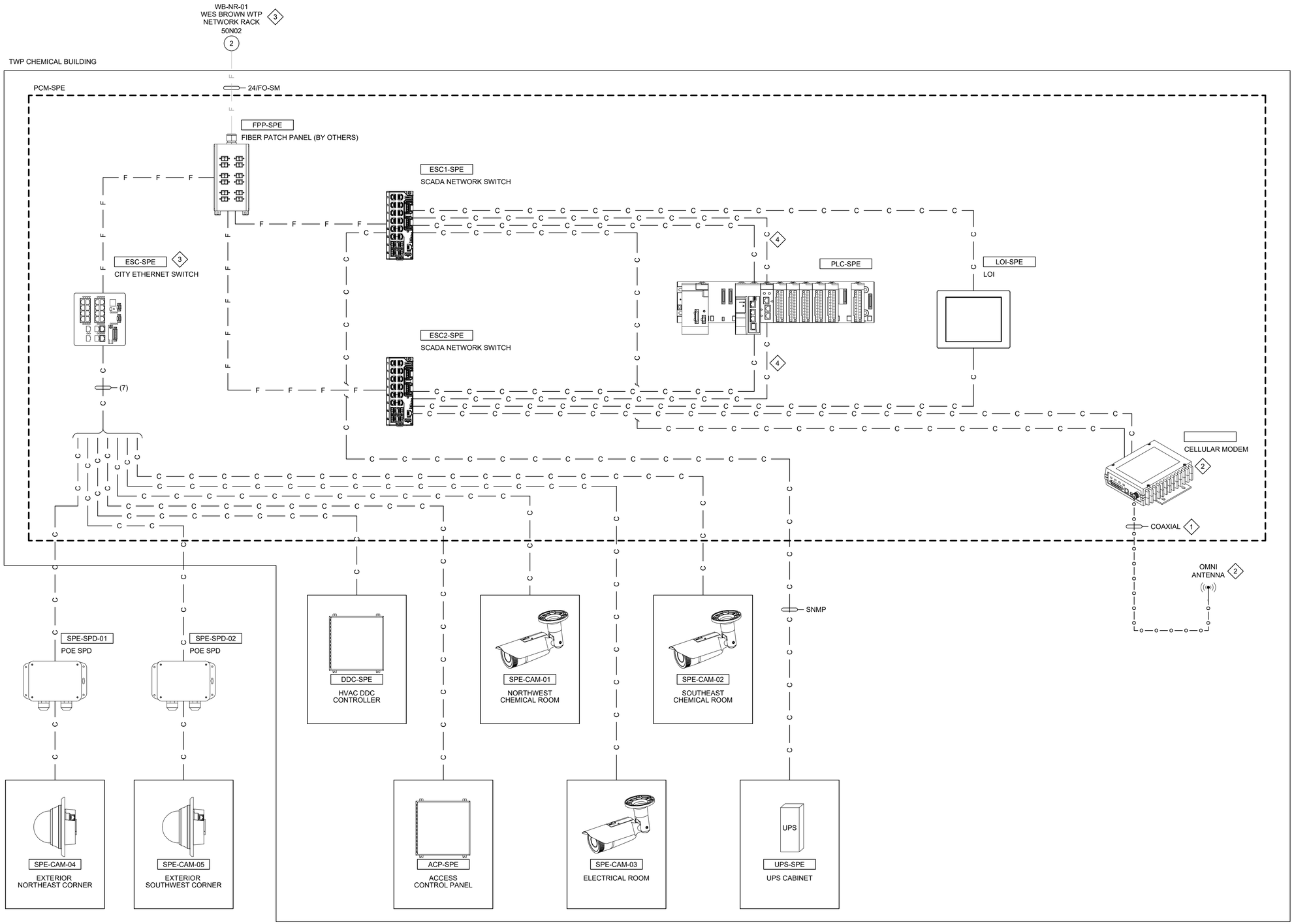

GENERAL NOTES:

1. PROVIDE LC TO LC DUPLEX SINGLE-MODE FIBER OPTIC PATCH CABLES FOR ALL INTERNAL FIBER CONNECTIONS, UNLESS NOTED OTHERWISE.
2. ALL COPPER CONNECTIONS FROM DEVICES EXTERNAL TO THE ENCLOSURE SHALL BE MADE THROUGH COPPER PATCH PANELS (NOT SHOWN FOR CLARITY) AND PATCHED THROUGH TO DEVICES AS SHOWN.
3. COMMUNICATION PROTOCOL SHALL BE MODBUS TCP, UNLESS OTHERWISE NOTED.

KEY NOTES:

1. PROVIDE SURGE PROTECTION FOR COAXIAL ANTENNA CABLE.
2. CELLULAR MODEM PROVIDED WITH OMNI ANTENNA. REFER TO SPECIFICATIONS FOR ADDITIONAL INFORMATION.
3. PROVIDED AND CONFIGURED BY THE OWNER, INSTALLED BY CONTRACTOR AS PART OF THE SOURCE WATER PUMP STATION AND FIBER OPTIC PROJECTS.
4. RIO-LCC REDUNDANT COMMUNICATION LINK.

REV	DATE	BY	DESCRIPTION
			BID SET

DESIGNED RG
DRAWN DBC
CHECKED JM
DATE MAY 2026

COLORADO LICENSED PROFESSIONAL ENGINEER 55107

carollo

THORNTON WATER PROJECT

CITY OF THORNTON - THORNTON WATER PROJECT

CHEMICAL BUILDING AND PRV VAULTS

INSTRUMENTATION

CHEMICAL BUILDING - PCM NETWORK CONNECTION DIAGRAM

VERIFY SCALES
BAR IS ONE INCH ON ORIGINAL DRAWING
0 1"
IF NOT ONE INCH ON THIS SHEET, ADJUST SCALES ACCORDINGLY

JOB NO. 204403
DRAWING NO. 04N50
SHEET NO. 111 OF 168

LAST SAVED BY: DCosme

PROJECT NO. 204403-100000 FILE NAME: 204403_04N50.dwg

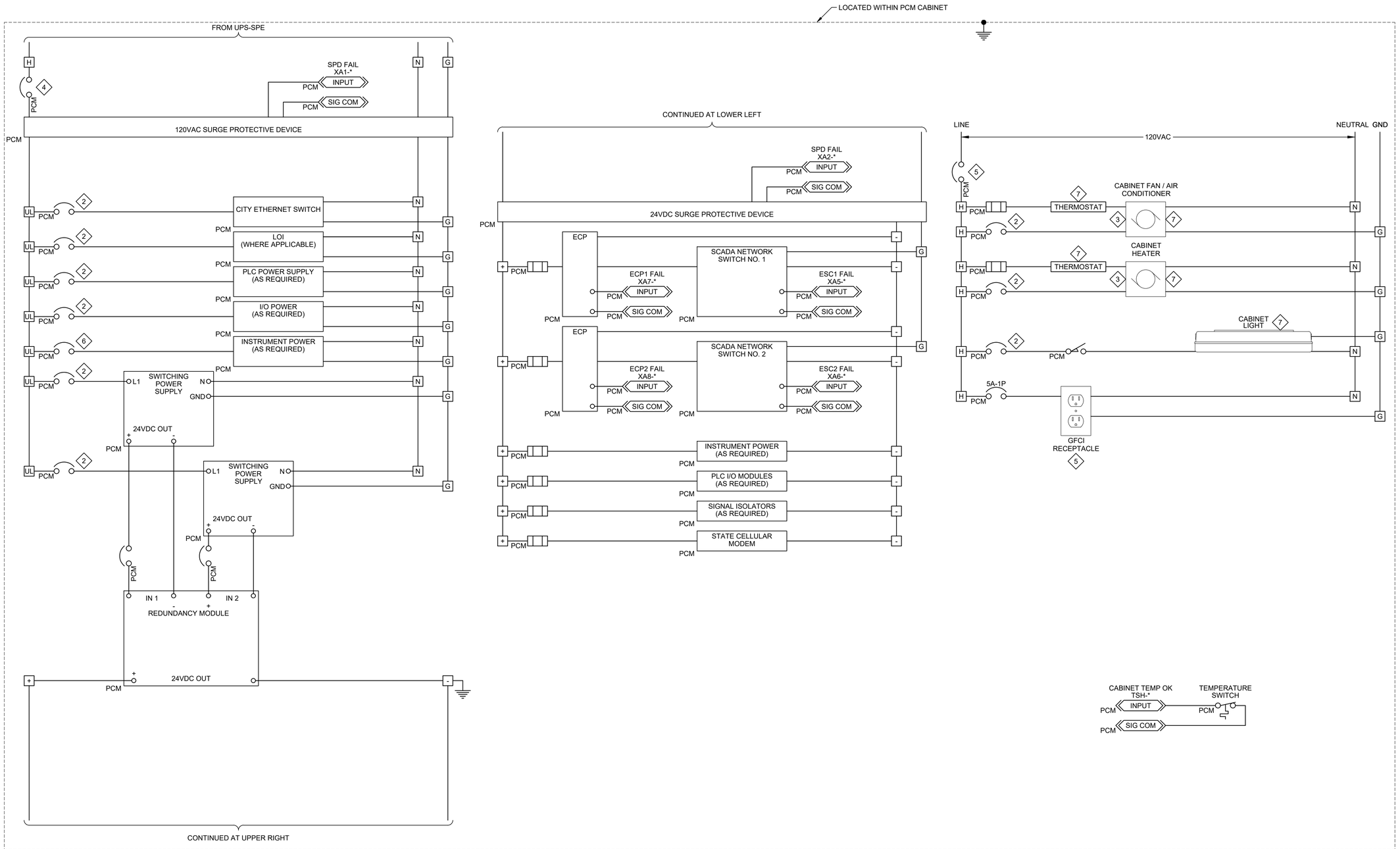

GENERAL NOTES:

1. SCHEMATIC ILLUSTRATES DESIGN INTENT ONLY. PROVIDE ALL NECESSARY COMPONENTS TO MEET PROJECT REQUIREMENTS.

KEY NOTES:

1. SIZE UPS AND BATTERY BASED ON UPS SPECIFICATION REQUIREMENTS.
2. SIZE BASED ON PROTECTION NEEDS.
3. VERIFY LOADS BASED ON TEMPERATURE CALCULATIONS. PROVIDE ADDITIONAL CIRCUIT IF REQUIRED.
4. SIZE BASED ON LOAD REQUIREMENT.
5. PROVIDE QUANTITY REQUIRED PER SPECIFICATIONS. SIZE RECEPTACLE FOR LAPTOP.
6. SIZE BASED ON PROTECTION NEEDS. PROVIDE SEPARATE CIRCUIT BREAKERS FOR EACH INSTRUMENT POWERED FROM THE PCM CABINET.
7. PROVIDE QUANTITY REQUIRED PER SPECIFICATIONS.

TERMINAL BLOCK LEGEND

H	120VAC
N	NEUTRAL
G	GROUND
UL	UPS 120VAC
+	24VDC (+)
-	24VDC (-)

TAG ⟷ LOOP
* = XXX ⟷ PCM = SPE

REFERENCE DWG.
50N06

LOCATION LEGEND

PCM	PCM OR DCS
MCC	MOTOR CONTROL CENTER
FLD	FIELD DEVICE
LCP	LOCAL CONTROL PANEL
STR	FREE-STANDING STARTER
VFD	FREE-STANDING VFD

DISCRETE-ANALOG PCM CABINET PLC AND INSTRUMENT POWER

2 CONTROL SCHEMATIC

REV	DATE	BY	DESCRIPTION
			BID SET

DESIGNED RG
DRAWN DBC
CHECKED JM
DATE MAY 2026

COLORADO LICENSED 55107 PROFESSIONAL ENGINEER

carollo

THORNTON WATER PROJECT

CITY OF THORNTON - THORNTON WATER PROJECT
CHEMICAL BUILDING AND PRV VAULTS
INSTRUMENTATION
CHEMICAL BUILDING - PCM PANEL POWER WIRING SCHEMATIC

VERIFY SCALES
BAR IS ONE INCH ON ORIGINAL DRAWING
0 1"
IF NOT ONE INCH ON THIS SHEET, ADJUST SCALES ACCORDINGLY

JOB NO. 204403
DRAWING NO. 06N01
SHEET NO. 112 OF 168

LAST SAVED BY: DCosme

PROJECT NO. 204403-100000 FILE NAME: 204403_06N01.dwg

KEY NOTES:

1. ON/OFF TIMER SETTABLE FROM 1 TO 30 MINUTES. PROVIDE LUTRON MAESTRO SERIES OR EQUAL RATED FOR SUPPLIED PUMP.

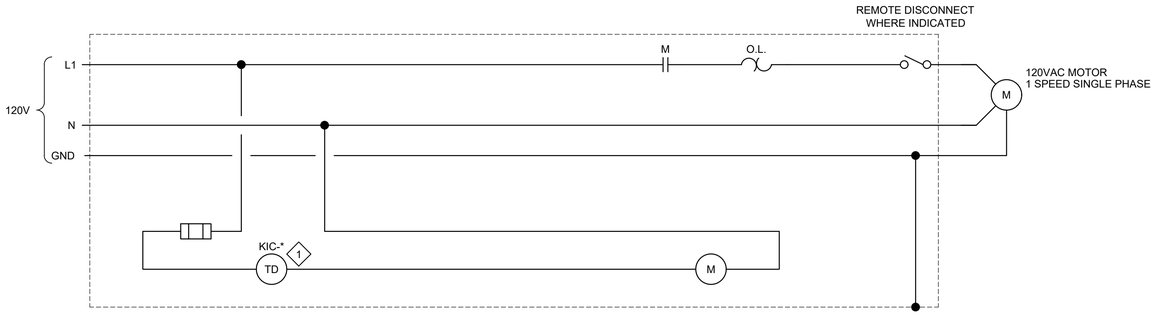

TAG	LOOP	REFERENCE DWG.
* = 500	PMP-500	50N01
* = 610	PMP-610	50N01

CHEMICAL SUMP PUMP SCHEMATIC

3 CONTROL SCHEMATIC

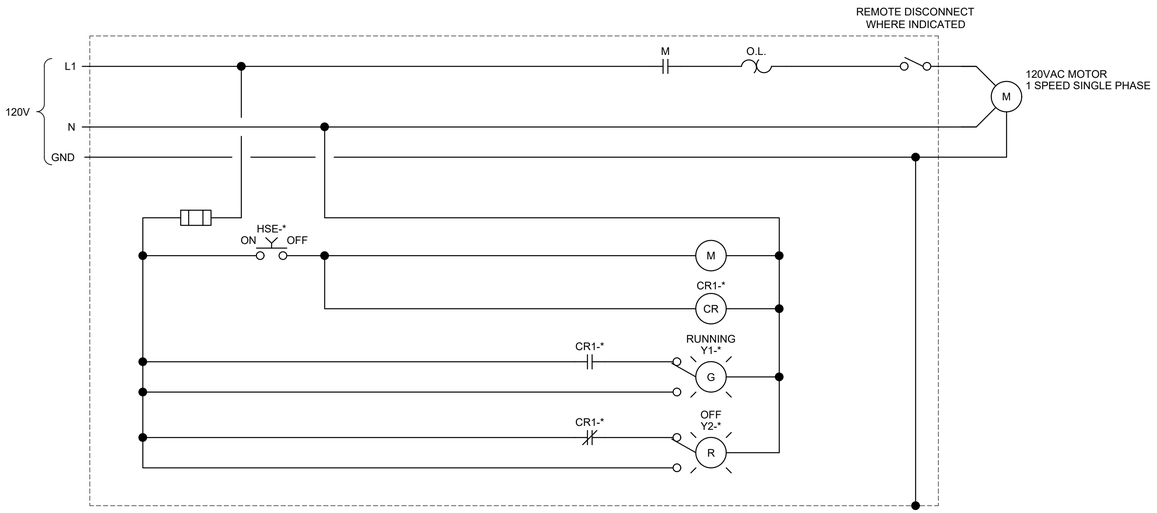

TAG	LOOP	REFERENCE DWG.
* = 505	PMP-505	50N01

SPE TRANSFER PUMP

4 CONTROL SCHEMATIC

KEY NOTES:

1. RELAYS ARE ENERGIZED UPON HIGH LEVEL.

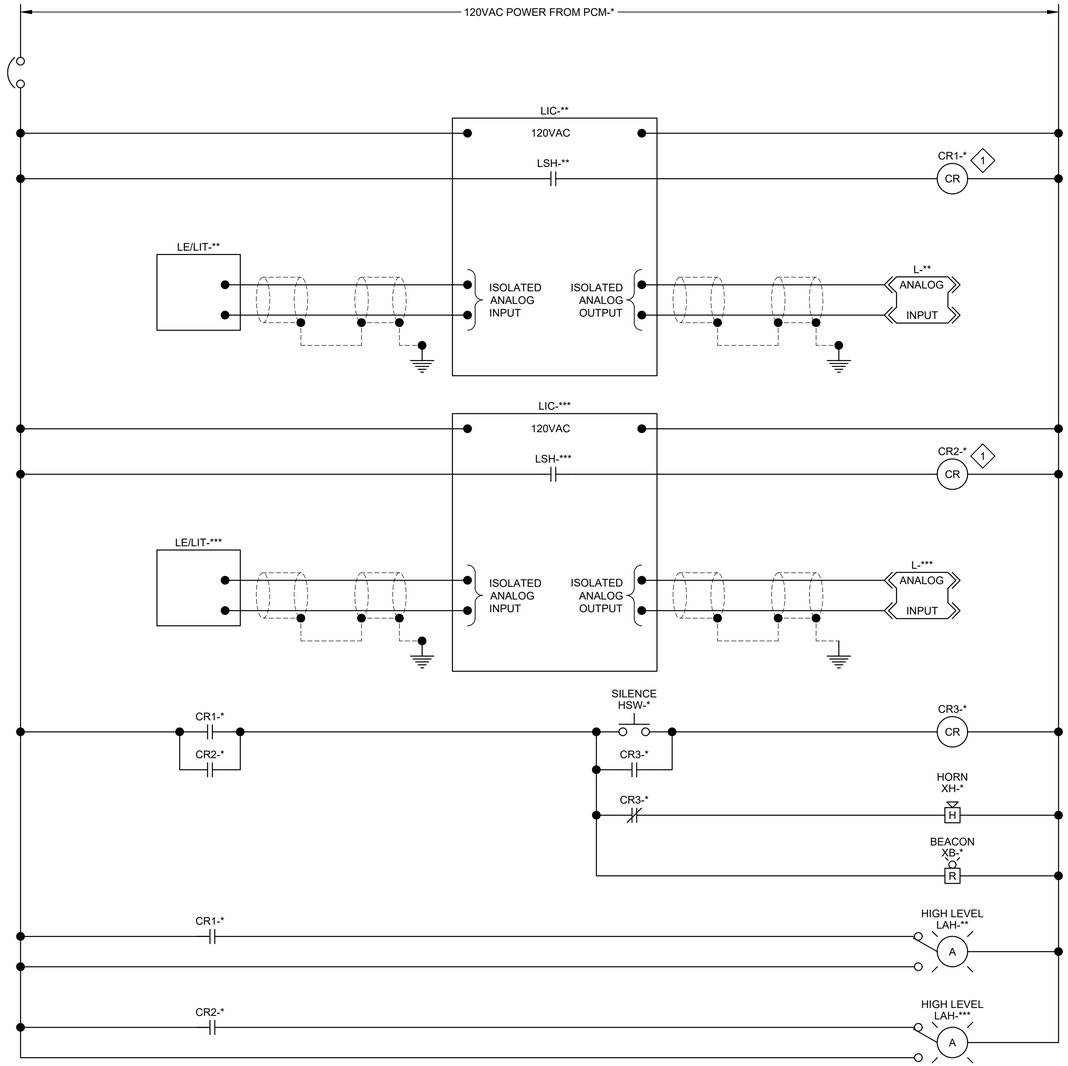

TAG	LOOP	REFERENCE DWG.
* = 510	LCP-510	50N01
** = 511	LIT-511	50N01
*** = 512	LIT-512	50N01

SPE TANK FILL ALARM PANEL

5 CONTROL SCHEMATIC

REV	DATE	BY	DESCRIPTION
			BID SET

DESIGNED RG
DRAWN DBC
CHECKED JM
DATE MAY 2026

COLORADO LICENSED PROFESSIONAL ENGINEER 55107 KELLEN GROSS

carollo®

THORNTON WATER PROJECT

CITY OF THORNTON - THORNTON WATER PROJECT
CHEMICAL BUILDING AND PRV VAULTS
INSTRUMENTATION
CHEMICAL BUILDING - CONTROL SCHEMATICS 1

VERIFY SCALES
BAR IS ONE INCH ON ORIGINAL DRAWING
0 1"
IF NOT ONE INCH ON THIS SHEET, ADJUST SCALES ACCORDINGLY

JOB NO. 204403
DRAWING NO. 06N02
SHEET NO. 113 OF 168

LAST SAVED BY: DCosme

PROJECT NO. 204403-100000 FILE NAME: 204403_06N02.dwg

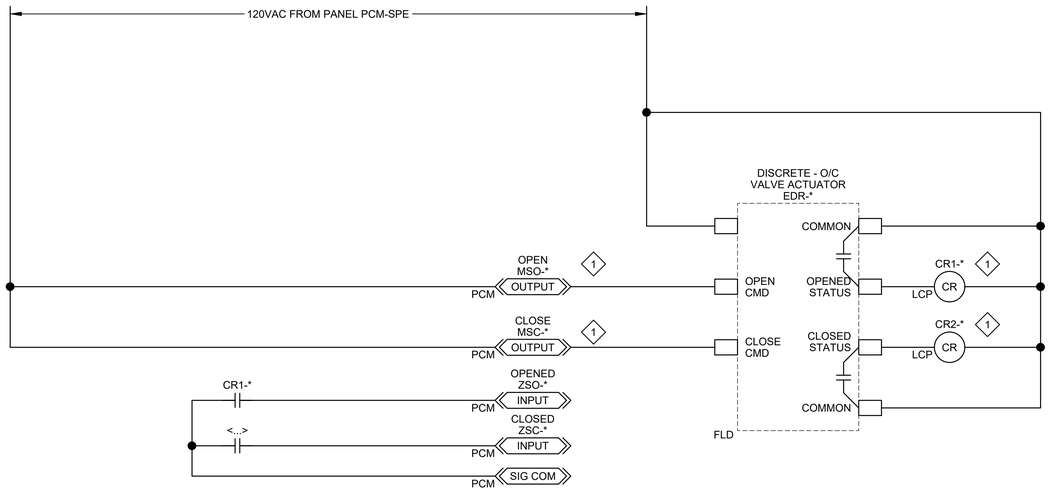

TAG	LOOP	REFERENCE DWG.
* = 523	FV-523	50N03
* = 524	FV-524	50N03
* = 525	FV-525	50N03
* = 526	FV-526	50N03
* = 527	FV-527	50N03
* = 528	FV-528	50N03
* = 529	FV-529	50N07
* = 530	FV-530	50N07
* = 531	FV-531	55N01

LOCATION LEGEND

PCM	PCM
FLD	FIELD DEVICE
LCP	LOCAL CONTROL PANEL

UTILITY WATER AND CHEMICAL INJECTION FEED VALVES

6 CONTROL SCHEMATIC

KEY NOTES:

1. PROVIDE CONTACT OUTPUTS OR INTERPOSING RELAYS AS REQUIRED BY THE VALVE/ACTUATOR MANUFACTURER.
2. REQUIRED FOR PRV-300 ONLY. SEE KEY NOTES ON DRAWING 30N07 FOR ADDITIONAL COMPONENT AND WIRING REQUIREMENTS.
3. REQUIRED FOR PRV-600 ONLY.

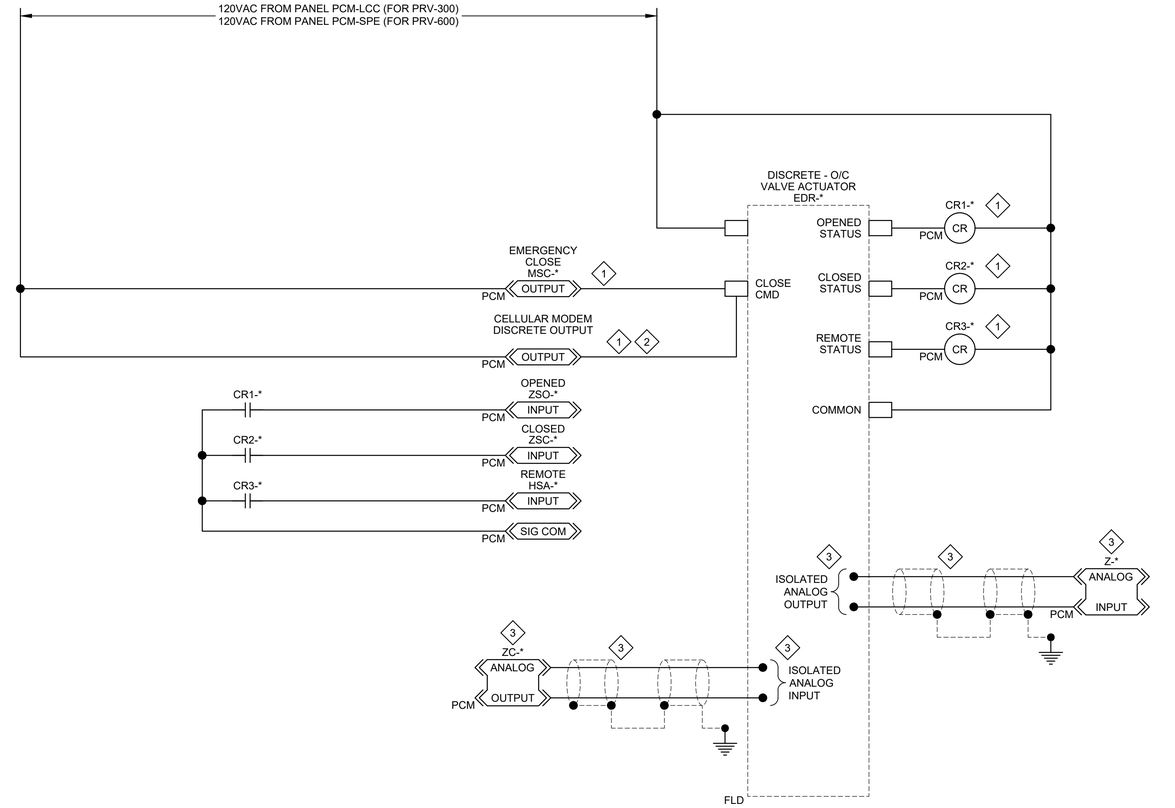

TAG	LOOP	REFERENCE DWG.
* = 300	PRV-300	30N07
* = 600	PRV-600	50N07

LOCATION LEGEND

PCM	PCM
FLD	FIELD DEVICE
LCP	LOCAL CONTROL PANEL

SLEEVE VALVES

7 CONTROL SCHEMATIC

REV	DATE	BY	DESCRIPTION
			BID SET

DESIGNED RG
DRAWN DBC
CHECKED JM
DATE MAY 2026

COLORADO LICENSED
ALLEN GROSS
55107
PROFESSIONAL ENGINEER
Digitally signed by Kristen W Cox
Date: 2026.05.08 14:44:47 -06'00'

carollo

THORNTON WATER PROJECT

CITY OF THORNTON - THORNTON WATER PROJECT
CHEMICAL BUILDING AND PRV VAULTS
INSTRUMENTATION
CHEMICAL BUILDING - CONTROL SCHEMATIC

VERIFY SCALES
BAR IS ONE INCH ON ORIGINAL DRAWING
0 1"
IF NOT ONE INCH ON THIS SHEET, ADJUST SCALES ACCORDINGLY

JOB NO. 204403
DRAWING NO. 06N03
SHEET NO. 114 OF 168

LAST SAVED BY: DCosme

PROJECT NO. 204403-100000 FILE NAME: 204403_06N03.dwg

KEY NOTES:

1. FLANGES WITH VAPOR PAPER.
2. REVERSE FLOAT LEVEL GAUGE.

I/O

POWER SOURCE

FIELD

DI
LSH 501
PLC-SPE

AI
L 511
PLC-SPE

AI
L 512
PLC-SPE

TM 120VAC-1P
CB 501
PCM-SPE

TM 120VAC-1P
CB 500
LP-SPE

TM 120VAC-1P
CB 510
PCM-SPE

TM 120VAC-1P
CB 505
LP-SPE

LSH 501
DISPLACEMENT
LE 501

LCP 500

PMP 500

FILL/HAZMAT STATION

LIT 511
INT
RADAR PTOF
LE 511

TANK NO. 1
LAH 511
LIC 511
BEACON
XB 510
LCP 510

TANK NO. 2
LAH 512
LIC 512
HORN
XH 510
SILENCE
HSW 510

LIT 512
INT
RADAR PTOF
LE 512

ON/OFF
HSE 505
LCP 505
RUNNING
Y1 505
OFF
Y2 505

PMP 505

SPE FEED PUMPS
6 | 50N03

PUMP VENT
50N04 | B

OVERFLOW
QLHH
QLH
QLL
QLLL
TNK 511
LI 511

OVERFLOW
QLHH
QLH
QLL
QLLL
TNK 512
LI 512

PMP-500
SUMP PUMP
1HP 120VAC 1PH
3 / 06N02

LE-501
SPE CONTAINMENT LEVEL HIGH
1 IN
* TYP
NL103

TNK-511
SPE TANK NO. 1

LE-511
SPE TANK NO. 1 LEVEL
0-12 FT

LCP-510
SPE TANK FILL ALARM PANEL
5 / 06N02

TNK-512
SPE TANK NO. 1

LE-512
SPE TANK NO. 2 LEVEL
0-12 FT

PMP-505
SPE TRANSFER PUMP
0.5HP 120VAC 1PH
4 / 06N02

REV	DATE	BY	DESCRIPTION
			BID SET

DESIGNED RG
DRAWN DBC
CHECKED JM
DATE MAY 2026

COLORADO LICENSED
KELLEN GRABS
55107
Digitally signed by Kellen W Grabs
Date: 2026.05.01 13:58:37 -06'00'
Professional Engineer

carollo

THORNTON WATER PROJECT

CITY OF THORNTON - THORNTON WATER PROJECT

CHEMICAL BUILDING AND PRV VAULTS

INSTRUMENTATION

CHEMICAL BUILDING - SODIUM PERMANGANATE STORAGE P&ID

VERIFY SCALES
BAR IS ONE INCH ON ORIGINAL DRAWING
0 1"
IF NOT ONE INCH ON THIS SHEET, ADJUST SCALES ACCORDINGLY

JOB NO. 204403
DRAWING NO. 50N01
SHEET NO. 115 OF 168

LAST SAVED BY: DCosme

PROJECT NO. 204403-100000 FILE NAME: 204403_50N01.dwg

KEY NOTES:

1. WATER METER PROVIDED BY COT.
2. PROVIDE HEAT TRACING ON UTILITY WATER LINE OUTSIDE BUILDING.

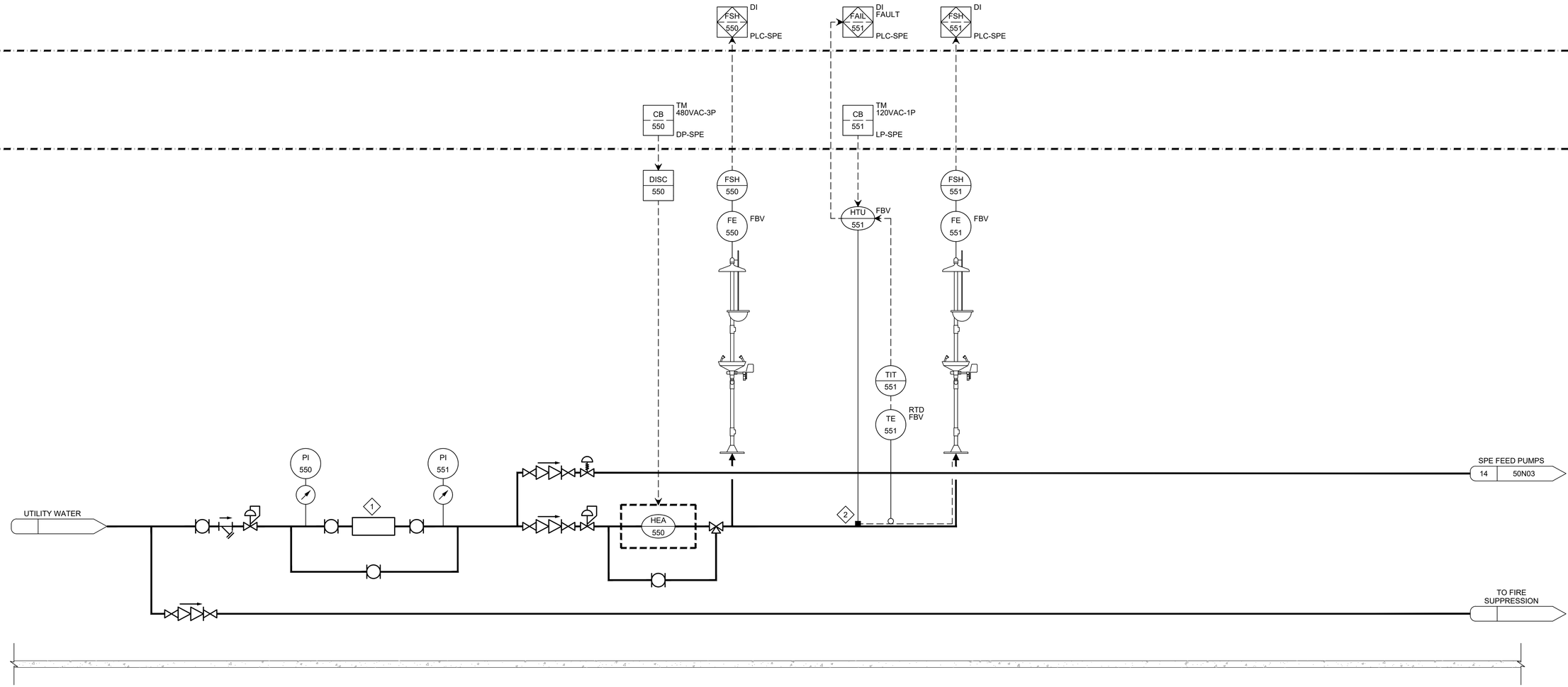

HEA-550
TANKLESS WATER HEATER NO. 1
87AMP 480VAC 3PH

TE-551
TEMPERATURE TRANSMITTER

HTU-551
FREEZELESS SAFETY SHOWER
1AMP 120VAC 1PH

REV	DATE	BY	DESCRIPTION
			BID SET

DESIGNED RG
DRAWN DBC
CHECKED JM
DATE MAY 2026

COLORADO LICENSED PROFESSIONAL ENGINEER 55107 Digitally signed by Kellen W Gordon Contact Info: Carollo Engineers Date: 2026.05.08 14:36:02 -06'00'

carollo

THORNTON WATER PROJECT

CITY OF THORNTON - THORNTON WATER PROJECT
CHEMICAL BUILDING AND PRV VAULTS
INSTRUMENTATION
CHEMICAL BUILDING - UTILITY WATER FEED P&ID

VERIFY SCALES
BAR IS ONE INCH ON ORIGINAL DRAWING
0 1"
IF NOT ONE INCH ON THIS SHEET, ADJUST SCALES ACCORDINGLY

JOB NO. 204403
DRAWING NO. 50N02
SHEET NO. 116 OF 168

LAST SAVED BY: DCosme

PROJECT NO. 204403-100000 FILE NAME: 204403_50N02.dwg

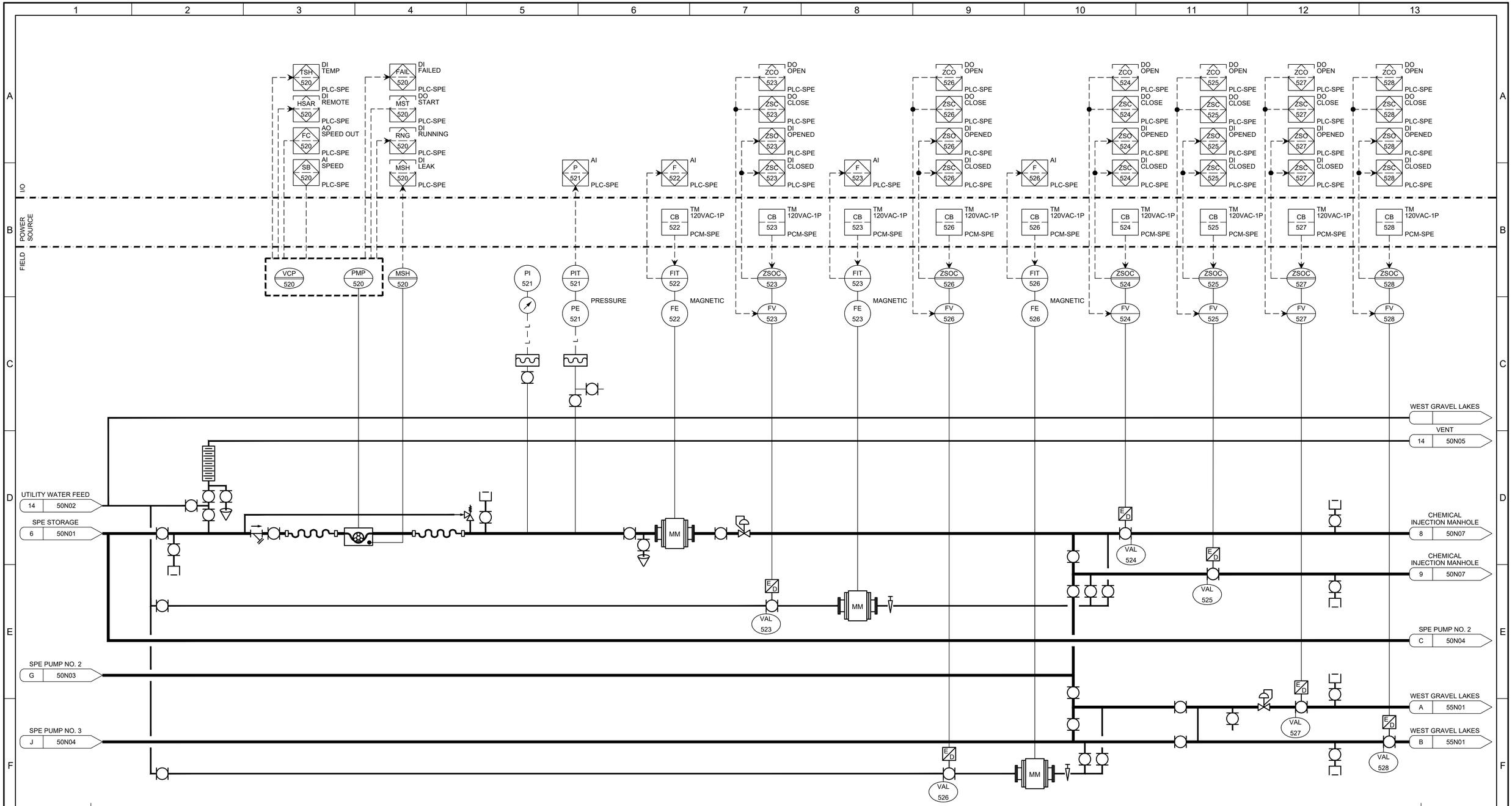

REV	DATE	BY	DESCRIPTION
			BID SET

DESIGNED RG
DRAWN DBC
CHECKED JM
DATE MAY 2026

COLORADO LICENSED
KELLEN GROSS
55107
PROFESSIONAL ENGINEER

carollo®

THORNTON WATER PROJECT

CITY OF THORNTON - THORNTON WATER PROJECT

CHEMICAL BUILDING AND PRV VAULTS

INSTRUMENTATION

CHEMICAL BUILDING - SODIUM PERMANGANATE FEED P&ID 1

VERIFY SCALES
BAR IS ONE INCH ON ORIGINAL DRAWING
0 1"
IF NOT ONE INCH ON THIS SHEET, ADJUST SCALES ACCORDINGLY

JOB NO. 204403
DRAWING NO. 50N03
SHEET NO. 117 OF 168

LAST SAVED BY: CRollins

PROJECT NO. 204403-100000 FILE NAME: 204403_50N03.dwg

KEY NOTES:

1. POWERED FROM WALL OUTLET.

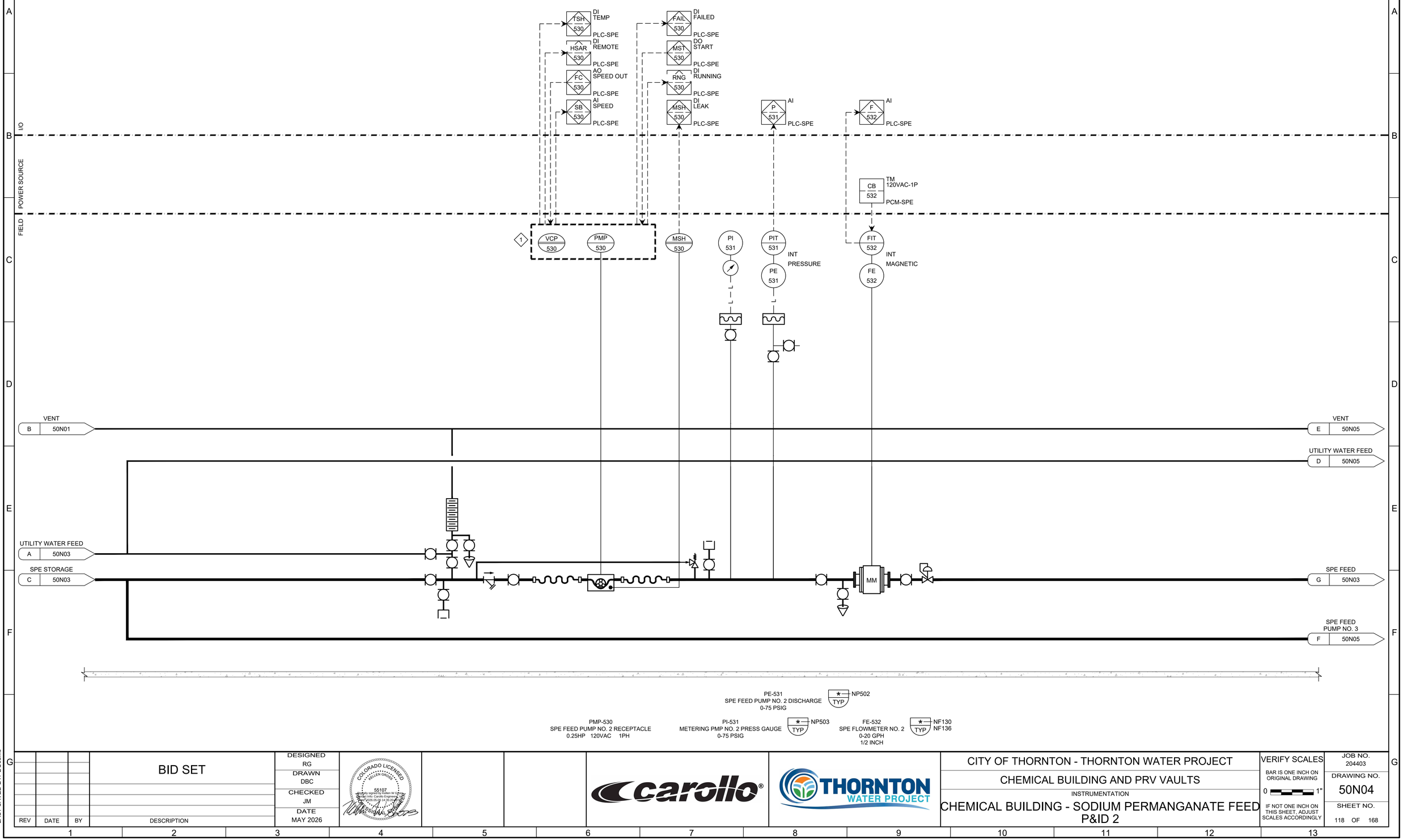

REV	DATE	BY	DESCRIPTION
			BID SET

DESIGNED RG
DRAWN DBC
CHECKED JM
DATE MAY 2026

COLORADO LICENSED
65107
I hereby approve this system to be
Patrick Allen Cavallo Engineer
2026.05.08 14:26:34
PROFESSIONAL ENGINEER

CITY OF THORNTON - THORNTON WATER PROJECT
CHEMICAL BUILDING AND PRV VAULTS
INSTRUMENTATION
CHEMICAL BUILDING - SODIUM PERMANGANATE FEED P&ID 2

VERIFY SCALES
BAR IS ONE INCH ON ORIGINAL DRAWING
0 1"
IF NOT ONE INCH ON THIS SHEET, ADJUST SCALES ACCORDINGLY

JOB NO. 204403
DRAWING NO. 50N04
SHEET NO. 118 OF 168

LAST SAVED BY: DCosme

PROJECT NO. 204403-100000 FILE NAME: 204403_50N04.dwg

KEY NOTES:

1. POWERED FROM WALL OUTLET.

I/O

POWER SOURCE

FIELD

TSH 540 — DI TEMP — PLC-SPE
HSAR 540 — DI REMOTE — PLC-SPE
FC 540 — AO SPEED OUT — PLC-SPE
SB 540 — AI SPEED — PLC-SPE

FAIL 540 — DI FAILED — PLC-SPE
MST 540 — DO START — PLC-SPE
RNG 540 — DI RUNNING — PLC-SPE
MSH 540 — DI LEAK — PLC-SPE

P 541 — AI — PLC-SPE

F 542 — AI — PLC-SPE

CB 542 — TM 120VAC-1P — PCM-SPE

1

VCP 540

PMP 540

MSH 540

PI 541

PIT 541 — INT PRESSURE

PE 541

FIT 542 — INT MAGNETIC

FE 542

VENT — E — 50N04

TANK VENT — 14 — 50N03

UTILITY WATER FEED — D — 50N04

SPE STORAGE — F — 50N04

SPE FEED — J — 50N03

MM

PE-541
SPE FEED PUMP NO. 2 DISCHARGE
0-50 PSIG
* TYP — NP502

PMP-540
SPE FEED PUMP NO. 3 RECEPTACLE
0.25HP 120VAC 1PH

PI-541
METERING PMP NO. 2 PRESS GAUGE
0-50 PSIG
* TYP — NP503

FE-542
SPE FLOWMETER NO. 2
0-20 GPH
1/2 INCH
* TYP — NF130, NF136

REV	DATE	BY	DESCRIPTION
			BID SET

DESIGNED RG
DRAWN DBC
CHECKED JM
DATE MAY 2026

COLORADO LICENSED — MATTHEW GRAMS — 55107 — Professional Engineer — 2026.05.08 14:26:24 -06'00' — PROFESSIONAL ENGINEER

carollo®

THORNTON WATER PROJECT

CITY OF THORNTON - THORNTON WATER PROJECT

CHEMICAL BUILDING AND PRV VAULTS

INSTRUMENTATION

CHEMICAL BUILDING - SODIUM PERMANGANATE FEED P&ID 3

VERIFY SCALES
BAR IS ONE INCH ON ORIGINAL DRAWING
0 — 1"
IF NOT ONE INCH ON THIS SHEET, ADJUST SCALES ACCORDINGLY

JOB NO. 204403
DRAWING NO. 50N05
SHEET NO. 119 OF 168

LAST SAVED BY: DCosme

PROJECT NO. 204403-100000 FILE NAME: 204403_50N05.dwg

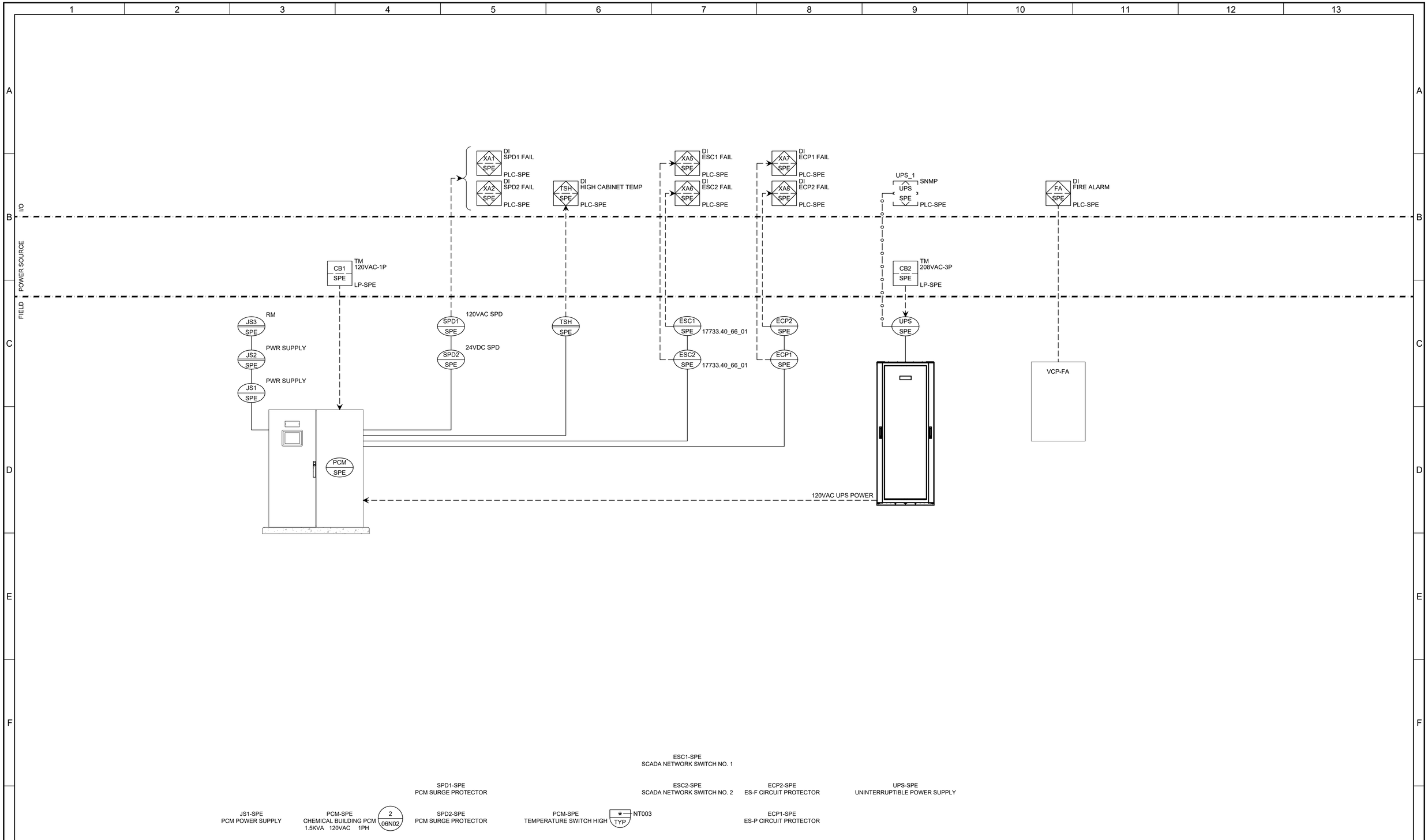

REV	DATE	BY	DESCRIPTION
			BID SET

DESIGNED RG
DRAWN DBC
CHECKED JM
DATE MAY 2026

COLORADO LICENSED PROFESSIONAL ENGINEER 55107 Digitally signed by Kellen W Gibson Date: 2026.05.04 14:36:31 -06'00'

carollo®

THORNTON WATER PROJECT

CITY OF THORNTON - THORNTON WATER PROJECT

CHEMICAL BUILDING AND PRV VAULTS

INSTRUMENTATION

CHEMICAL BUILDING - CHEMICAL BUILDING PCM CABINET P&ID

VERIFY SCALES
BAR IS ONE INCH ON ORIGINAL DRAWING
0 1"
IF NOT ONE INCH ON THIS SHEET, ADJUST SCALES ACCORDINGLY

JOB NO. 204403
DRAWING NO. 50N06
SHEET NO. 120 OF 168

LAST SAVED BY: CRollins

PROJECT NO. 204403-100000 FILE NAME: 204403_50N06.dwg

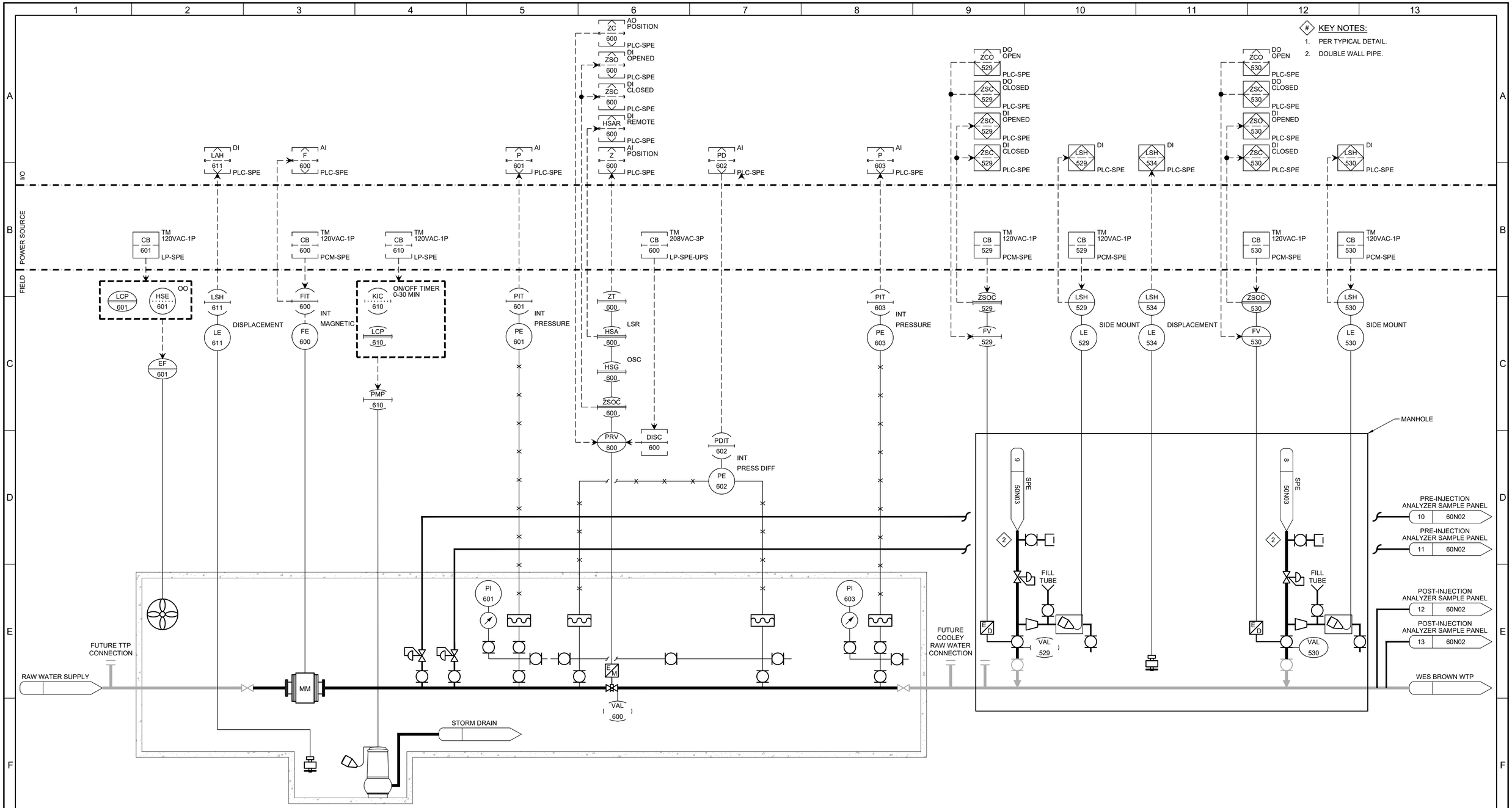

LE-611 VAULT FLOOD SWITCH 2 IN — * TYP — NL103

PMP-610 PRV AND METER VAULT SUMP PUMP 0.5HP 120VAC 1PH — 3 06N03

PE-601 PRE-PCV PRESSURE TRANSMITTER 0-400 PSIG — * TYP — NP501

PE-602 PRESSURE DIFFERENTIAL TRANSMITTER 0-100 PSIG — * TYP — NP189

PI-603 POST-PCV PRESS GAUGE 0-400 PSI

FV-529 POST INJECTION VALVES — 6 06N03

LE-534 MANHOLE FLOOD SWITCH 2 IN — * TYP — NL103

FV-530 POST INJECTION VALVES — 6 06N03

EF-601 PRV VAULT EXHAUST FAN 0.25HP 120VAC 1PH

FE-600 WB TWP VAULT FLOWMETER 40 MGD 42 INCH — * TYP — NF132

PI-601 PRE-PCV PRESS GAUGE 0-400 PSI

PRV-600 SLEEVE VALVE 2HP 208VAC 3PH — 7 06N03

PE-603 POST-PCV PRESSURE TRANSMITTER 0-400 PSIG — * TYP — NP501

LE-529 LEVEL SWITCH HIGH — 1 — * TYP — MP709

LE-530 LEVEL SWITCH HIGH — 1 — * TYP — MP709

REV	DATE	BY	DESCRIPTION
			BID SET

DESIGNED RG
DRAWN DBC
CHECKED JM
DATE MAY 2026

COLORADO LICENSED HELEN GROSS 55107 Digitally signed by Kaitlen M Gross Date: Info: Carollo Engineers, Inc. 2020.09.08 13:39:45 -06'00' PROFESSIONAL ENGINEER

carollo®

THORNTON WATER PROJECT

CITY OF THORNTON - THORNTON WATER PROJECT

CHEMICAL BUILDING AND PRV VAULTS

INSTRUMENTATION

CHEMICAL BUILDING - PRV VAULT AND CHEMICAL INJECTION MANHOLE P&ID

VERIFY SCALES
BAR IS ONE INCH ON ORIGINAL DRAWING
0 1"
IF NOT ONE INCH ON THIS SHEET, ADJUST SCALES ACCORDINGLY

JOB NO. 204403
DRAWING NO. 50N07
SHEET NO. 121 OF 168

LAST SAVED BY: DCosme

PROJECT NO. 204403-100000 FILE NAME: 204403_50N07.dwg

KEY NOTES:

1. POWERED FROM WALL OUTLET.
2. FURNISHED WITH INTEGRAL LEVEL CONTROLLER FOR EACH PUMP.
3. PROVIDE HEAT TRACING OF THE DRAIN LINE AS IT CROSSES THE BRIDGE ADJACENT TO THE WEST GRAVEL LAKES PUMP STATION.

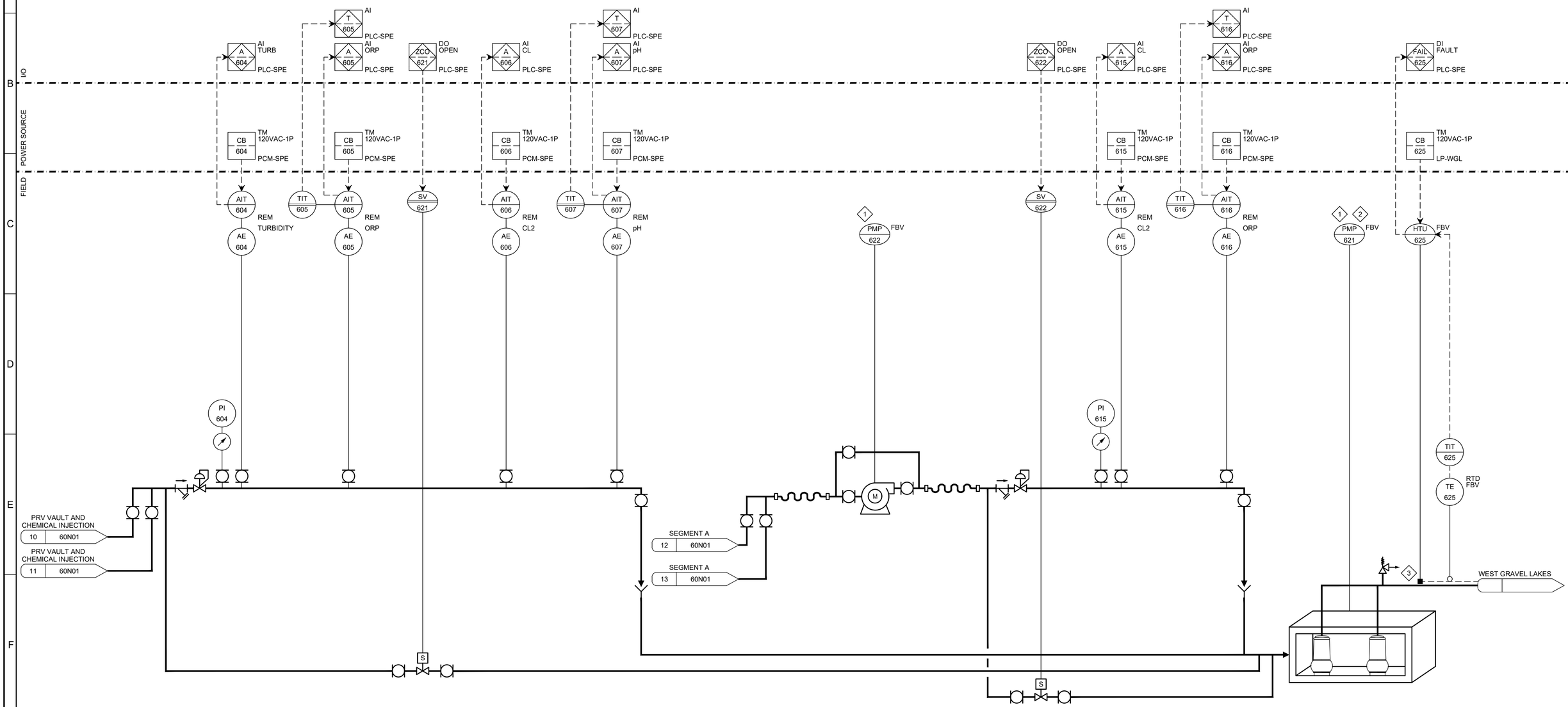

REV	DATE	BY	DESCRIPTION
			BID SET

DESIGNED RG
DRAWN DBC
CHECKED JM
DATE MAY 2026

COLORADO LICENSED PROFESSIONAL ENGINEER 55107 Digitally signed by Kellen W Gordon Date: 2026.05.08 14:36:57 -06'00'

carollo

THORNTON WATER PROJECT

CITY OF THORNTON - THORNTON WATER PROJECT

CHEMICAL BUILDING AND PRV VAULTS

INSTRUMENTATION

CHEMICAL BUILDING - PRV VAULT AND ANALYZERS CHEMICAL INJECTION P&ID

VERIFY SCALES
BAR IS ONE INCH ON ORIGINAL DRAWING
0 1"
IF NOT ONE INCH ON THIS SHEET, ADJUST SCALES ACCORDINGLY

JOB NO. 204403
DRAWING NO. 50N08
SHEET NO. 122 OF 168

LAST SAVED BY: DCosme

PROJECT NO. 204403-100000 FILE NAME: 204403_50N08.dwg

KEY NOTES:

1. CONNECTIONS INTERNAL TO PACKAGE ARE MADE BY THE GENERATOR SUPPLIER.
2. CONTRACTOR TO COORDINATE FINAL QUANTITY OF REQUIRED SIGNALS WITH MANUFACTURERS.

I/O

GEN1 701 — DI — GEN IN AUTO — PLC-SPE
GEN2 701 — DI — FUEL LEAK — PLC-SPE
GEN3 701 — DI — LOW FUEL — PLC-SPE
GEN4 701 — DI — RUNNING — PLC-SPE
GEN5 701 — DI — READY — PLC-SPE
GEN6 701 — DI — BATT CHARGE READY — PLC-SPE
GEN7 701 — DI — BATTERY LOW — PLC-SPE
GEN8 701 — DO — START/STOP — PLC-SPE

ATS1 702 — DI — UTILITY OK — PLC-SPE
ATS2 702 — DI — UTILITY FAILURE — PLC-SPE
ATS3 702 — DI — ON UTILITY — PLC-SPE
ATS4 702 — DI — GEN AVAILABLE — PLC-SPE
ATS5 702 — DI — GEN FAILURE — PLC-SPE
ATS6 702 — DI — ON GEN — PLC-SPE

POWER SOURCE

CB 701 — TM — 208VAC-3P — LP-SPE

FIELD

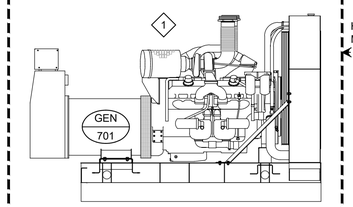

GENERATOR PACKAGE

HARDWIRED SIGNALS FOR TRANSFER MONITORING AND CONTROL 2

ATS
702

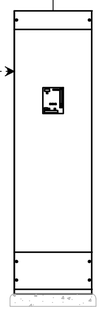

GEN-701
ENGINE GENERATOR

ATS-702
AUTOMATIC TRANSFER SWITCH

REV	DATE	BY	DESCRIPTION
			BID SET

DESIGNED RG
DRAWN DBC
CHECKED JM
DATE MAY 2026

COLORADO LICENSED — KELSEY GROSS — 55107 — Digitally signed by Kelsey M Gross — Date: 2026.05.08 14:36:13 MDT — PROFESSIONAL ENGINEER

carollo®

THORNTON WATER PROJECT

CITY OF THORNTON - THORNTON WATER PROJECT
CHEMICAL BUILDING AND PRV VAULTS
INSTRUMENTATION
CHEMICAL BUILDING - GENERATOR AND ATS P&ID

VERIFY SCALES
BAR IS ONE INCH ON ORIGINAL DRAWING
0 1"
IF NOT ONE INCH ON THIS SHEET, ADJUST SCALES ACCORDINGLY

JOB NO. 204403
DRAWING NO. 50N09
SHEET NO. 123 OF 168

LAST SAVED BY: DCosme

PROJECT NO. 204403-100000 FILE NAME: 204403_50N09.dwg

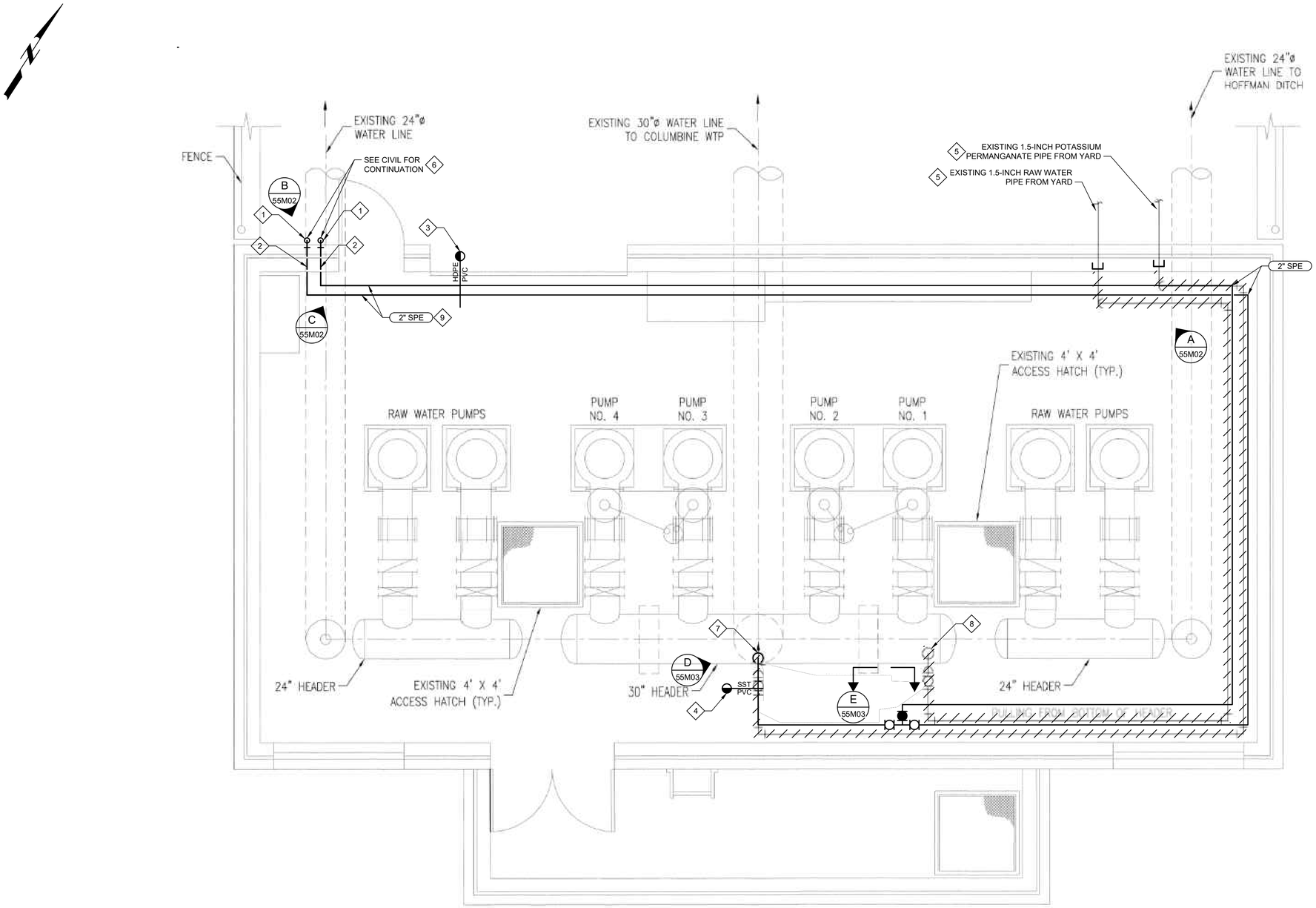

DESCRIPTION

A PLAN
SCALE: NO SCALE

GENERAL NOTES:

1. ROUTING OF NEW PIPES IS NOT SHOWN TO SCALE, AND NOT ALL EXISTING PIPES AND DUCTS ARE SHOWN ON THIS PLAN. CONTRACTOR TO ROUTE NEW PIPING SUCH THAT IT DOES NOT INTERFERE WITH EXISTING PIPING, DUCTWORK, STRUCTURAL COMPONENTS, AND OTHER EQUIPMENT.
2. FOR CONTINUATION OF PIPING OUTSIDE OF STRUCTURES, SEE CIVIL DRAWINGS.

KEY NOTES:

1. SODIUM PERMANGANATE LINES SHALL TRANSITION FROM BURIED TO EXPOSED PRIOR TO ENTERING THE WEST GRAVEL LAKES PUMP STATION. PROVIDE HEAT TRACE AND INSULATION ON EXTERIOR SPE PIPES WHEN PIPING HAS A BURY DEPTH LESS THAN 4 FEET.
2. SODIUM PERMANGANATE LINES SHALL CORE THROUGH WEST GRAVEL LAKES PUMP STATION WALL. DO NOT DAMAGE REINFORCEMENT IN THE EXISTING WALL. LOCATE REINFORCEMENT USING NON-DESTRUCTIVE MEANS. DRILL ONE OPENING TO ALLOW 2" MINIMUM CLEAR DISTANCE AROUND PENETRATIONS. CONTRACTOR TO VERIFY PRIOR TO CONSTRUCTION.
3. TRANSITION DOUBLE CONTAINED SODIUM PERMANGANATE PIPING INSIDE WEST GRAVEL PUMP STATION TO 2" PVC PER THE PIPE SCHEDULE. DOUBLE CONTAINED PIPING SHALL BE USED OVER ALL EXISTING DOORWAYS.
4. TRANSITION SODIUM PERMANGANATE PIPING TO SS 316 UPSTREAM OF CHEMICAL INJECTION.
5. DEMOLISH EXISTING 1.5-INCH RAW WATER AND POTASSIUM PERMANGANATE PIPES WITHIN THE BUILDING. CAP AND ABANDON REMAINING PIPES.
6. EXTERIOR PIPING SHALL BE INSULATED WHERE THE BURY DEPTH IS LESS THAN 48-INCHES. INSULATION SHALL BE TYPE 1 WITH A TYPE 3 JACKET IN ACCORDANCE WITH SECTION 40_05_06.55.
7. EXISTING THREAD-O-LET CONNECTION SHALL BE USED FOR NEW SODIUM PERMANGANATE INJECTION.
8. CLEAN ALL DEBRIS FROM AREA. CAP THREAD-O-LET CONNECTION.
9. PIPE SIZE SHOWN IS INNER CHEMICAL CARRIER PIPE DIAMETER.

REV	DATE	BY	DESCRIPTION
			BID SET

DESIGNED SJH
DRAWN LAA
CHECKED JAM
DATE MAY 2026

COLORADO LICENSED PROFESSIONAL ENGINEER 57176

carollo

THORNTON WATER PROJECT

CITY OF THORNTON - THORNTON WATER PROJECT
CHEMICAL BUILDING AND PRV VAULTS
PROCESS MECHANICAL
WEST GRAVEL LAKES PUMP STATION
PLAN VIEW

VERIFY SCALES
BAR IS ONE INCH ON ORIGINAL DRAWING
0 1"
IF NOT ONE INCH ON THIS SHEET, ADJUST SCALES ACCORDINGLY

JOB NO. 204403
DRAWING NO. 55M01
SHEET NO. 124 OF 168

LAST SAVED BY: LHinostroza

PROJECT NO. 204403-100000 FILE NAME: 204403_55M01.dwg

GENERAL NOTES:

1. REFER TO GENERAL MECHANICAL NOTES FOR ADDITIONAL INFORMATION AND REQUIREMENTS.
2. FIELD ROUTE ALL SODIUM PERMANGANATE FEED LINES THROUGH WEST GRAVEL LAKES PUMP STATION.

KEY NOTES:

1. DEMOLISH EXISTING 1-1/2 INCH POTASSIUM PERMANGANATE AND RAW WATER PIPING AND INSULATION.
2. CAP AND ABANDON EXISTING PIPING IN PLACE WITHIN THE WALL (TYP).
3. DOUBLE CONTAINED SODIUM PERMANGANATE PIPING SHALL PENETRATE ABOVE EXISTING ELECTRICAL CONDUIT AND DOORWAY. DOUBLE CONTAINED PIPING SHALL BE USED OVER ALL EXISTING DOORWAYS.
4. PROVIDE HEAT TRACE AND INSULATION ON EXTERIOR SPE PIPES WHEN PIPING HAS A BURY DEPTH LESS THAN 4 FEET. EXTERIOR PIPING SHALL BE INSULATED WHERE THE BURY DEPTH IS LESS THAN 48-INCHES. INSULATION SHALL BE TYPE 1 WITH A TYPE 3 JACKET IN ACCORDANCE WITH SECTION 40_05_06.55.
5. PIPE SIZE SHOWN IS INNER CHEMICAL CARRIER PIPE DIAMETER.
6. APPROXIMATE LOCATION OF HEAT TRACE PANEL. REFER TO DRAWING 55E02 FOR ADDITIONAL INFORMATION.

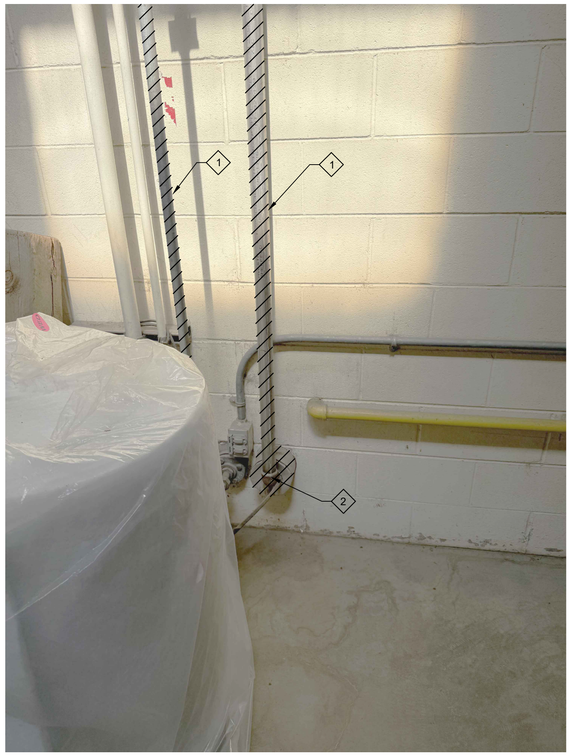

A PHOTO
55M01
SCALE: NO SCALE
FILE:

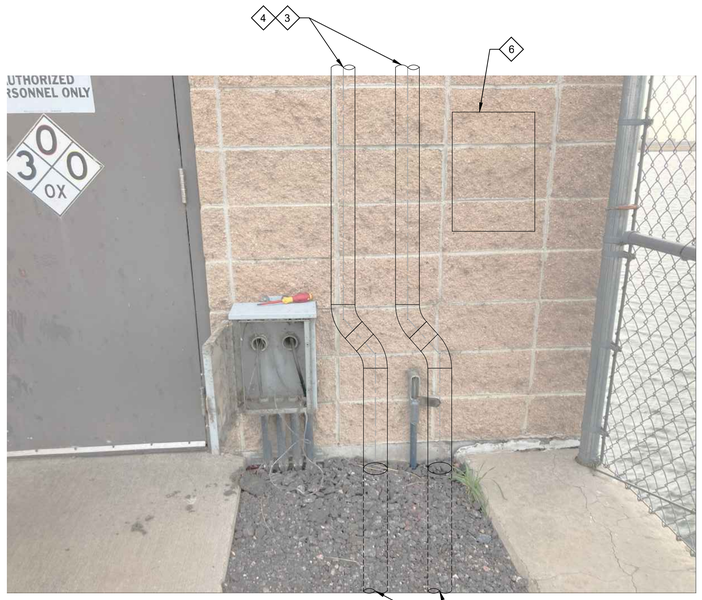

B PHOTO
55M01
SCALE: NO SCALE
FILE:



C PHOTO
55M01
SCALE: NO SCALE
FILE:

REV	DATE	BY	DESCRIPTION
			BID SET

DESIGNED SJH
DRAWN LAA
CHECKED JAM
DATE MAY 2026

COLORADO LICENSED
57176
Digitally signed by John Alexander Mueller
Date: Exercise Options
PROFESSIONAL ENGINEER

carollo®

THORNTON WATER PROJECT

CITY OF THORNTON - THORNTON WATER PROJECT
CHEMICAL BUILDING AND PRV VAULTS
PROCESS MECHANICAL
WEST GRAVEL LAKES PUMP STATION
DETAILS - 1

VERIFY SCALES
BAR IS ONE INCH ON ORIGINAL DRAWING
0 1"
IF NOT ONE INCH ON THIS SHEET, ADJUST SCALES ACCORDINGLY

JOB NO. 204403
DRAWING NO. 55M02
SHEET NO. 125 OF 168

LAST SAVED BY: LHinostroza

PROJECT NO. 204403-100000 FILE NAME: 204403_55M02.dwg

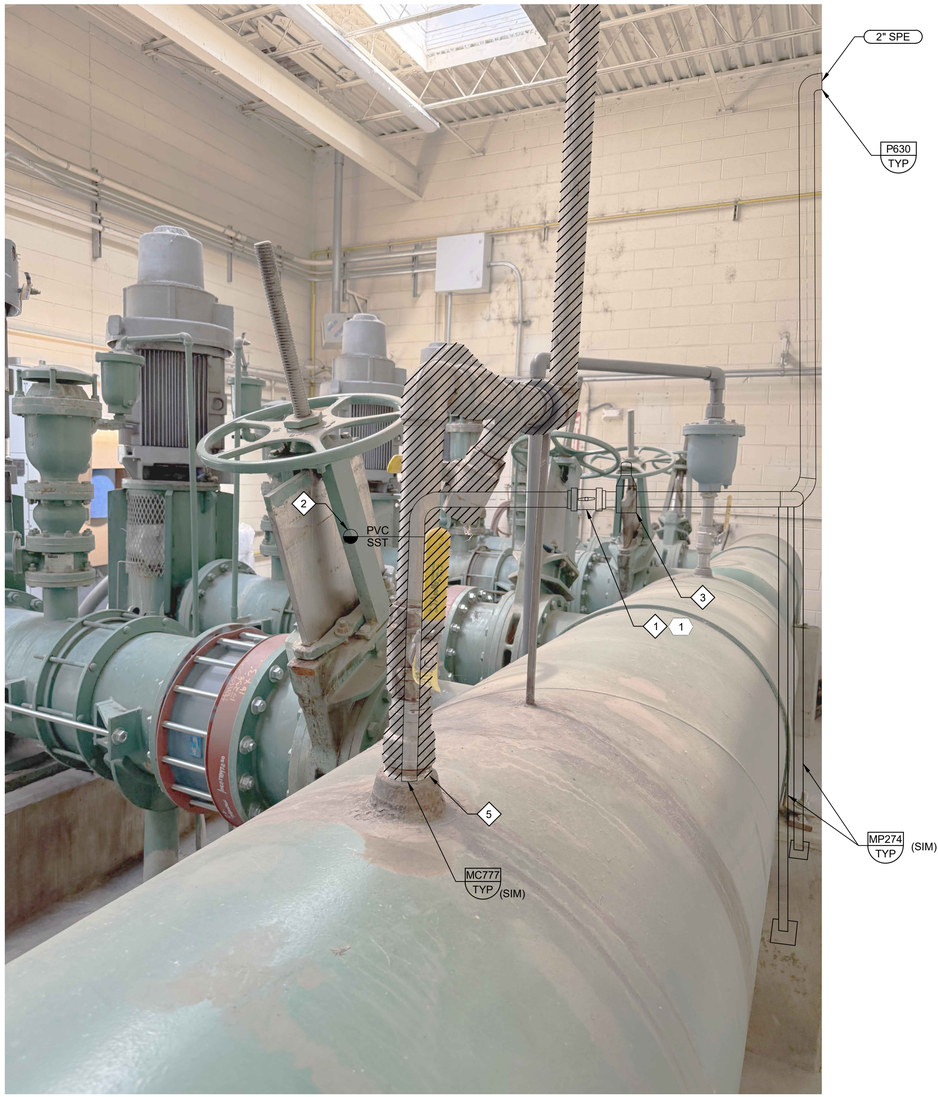

D
55M01
ELEVATION
SCALE: NOT TO SCALE

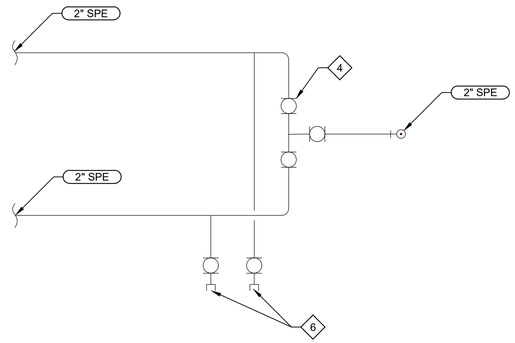

E
55M01
SECTION
SCALE: NOT TO SCALE

GENERAL NOTES:

1. REFER TO GENERAL MECHANICAL NOTES FOR ADDITIONAL INFORMATION AND REQUIREMENTS.
2. FIELD ROUTE ALL SODIUM PERMANGANATE FEED LINES THROUGH WEST GRAVEL LAKES PUMP STATION.

KEY NOTES:

1. ACTUATED BALL VALVE
2. TRANSITION SODIUM PERMANGANATE PIPING TO SS 316 UPSTREAM OF CHEMICAL INJECTION.
3. BACKPRESSURE REGULATING VALVE.
4. BALL VALVE (TYP).
5. CHEMICAL INJECTION QUILL AND PIPING NOT SHOWN FOR CLARITY. USE EXISTING CHEMICAL INJECTION THREAD-O-LET CONNECTION. CLEAN ALL DEBRIS FROM AREA.
6. PROVIDE 3/4" DIAMETER FLUSHING CONNECTION FOR PIPE DRAINAGE 4'-0" AFF ALONG THE SOUTH WALL OF THE WGL PUMP STATION.

KEY TAGS:

#		
1	FV-531	WGL CHEMICAL INJECTION

REV	DATE	BY	DESCRIPTION
			BID SET

DESIGNED SJH
DRAWN LAA
CHECKED JAM
DATE MAY 2026

COLORADO LICENSED PROFESSIONAL ENGINEER 57176

carollo

THORNTON WATER PROJECT

CITY OF THORNTON - THORNTON WATER PROJECT
CHEMICAL BUILDING AND PRV VAULTS
PROCESS MECHANICAL
WEST GRAVEL LAKES PUMP STATION
DETAILS - 02

VERIFY SCALES
BAR IS ONE INCH ON ORIGINAL DRAWING
0 1"
IF NOT ONE INCH ON THIS SHEET, ADJUST SCALES ACCORDINGLY

JOB NO. 204403
DRAWING NO. 55M03
SHEET NO. 126 OF 168

LAST SAVED BY: LHinostroza

PROJECT NO. 204403-100000 FILE NAME: 204403_55M03.dwg

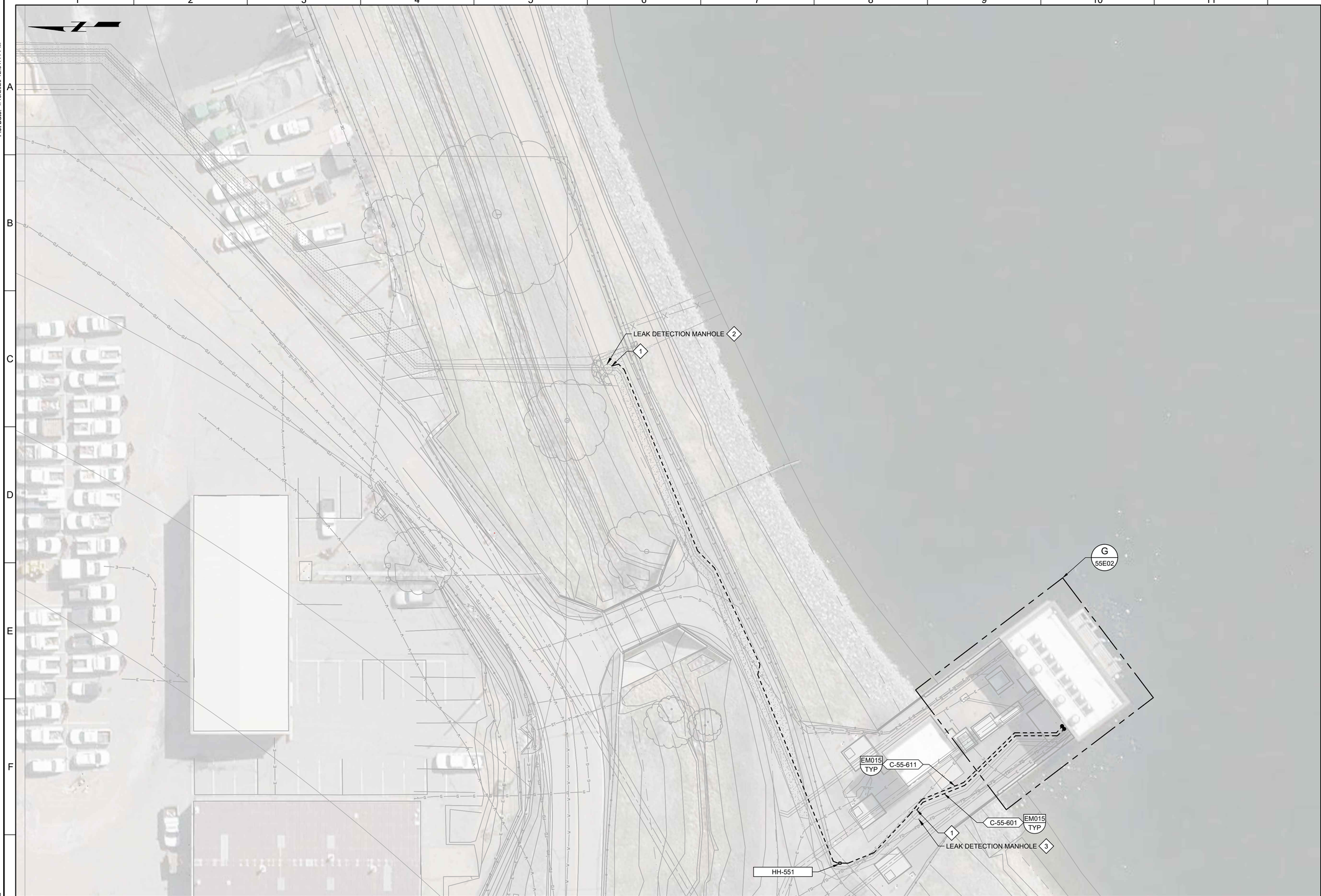

KEY NOTES:

1. PROVIDE CONDUIT ENTRY INTO LEAK DETECTION MANHOLE PER DETAIL EM133/TYP.
2. LEAK DETECTION MANHOLE PROVIDED WITH (2) TUNING FORK LEVEL SWITCHES TAGGED LSH-532 AND LSH-533, AND (1) FLOOD SWITCH TAGGED LSH-535.
3. LEAK DETECTION MANHOLE PROVIDED WITH (2) TUNING FORK LEVEL SWITCHES TAGGED LSH-536 AND LSH-537, AND (1) FLOOD SWITCH TAGGED LSH-538.

811 Know what's below. Call before you dig.

Call before you Overhead

KEY MAP

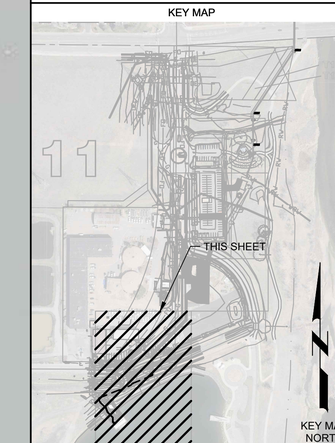

SCALE

0 10' 20' 40'

SCALE: 1" = 20' (HORIZ)

REV	DATE	BY	DESCRIPTION
			BID SET

DESIGNED KWG
DRAWN SGH
CHECKED SLB
DATE MAY 2026

COLORADO LICENSED
KELLEN GROSS
55107
Digitally signed by Kellen W Gross
DN: cn=Kellen W Gross, o=Carollo Engineers, ou=Electrical Engineer, 2026.05.08 16:31:46-06'00'
PROFESSIONAL ENGINEER

carollo®

THORNTON WATER PROJECT

CITY OF THORNTON - THORNTON WATER PROJECT

CHEMICAL BUILDING AND PRV VAULTS

ELECTRICAL

WEST GRAVEL LAKES PUMP STATION
ELECTRICAL SITE PLAN

VERIFY SCALES
BAR IS ONE INCH ON ORIGINAL DRAWING
0 1"
IF NOT ONE INCH ON THIS SHEET, ADJUST SCALES ACCORDINGLY

JOB NO. 204403
DRAWING NO. 55E01
SHEET NO. 127 OF 168

Plot Date: 1/15/2026 12:51:41 PM

LAST SAVED BY: GHerrera

PROJECT NO.:204403-100000 FILE NAME: 204403_55E01.dwg

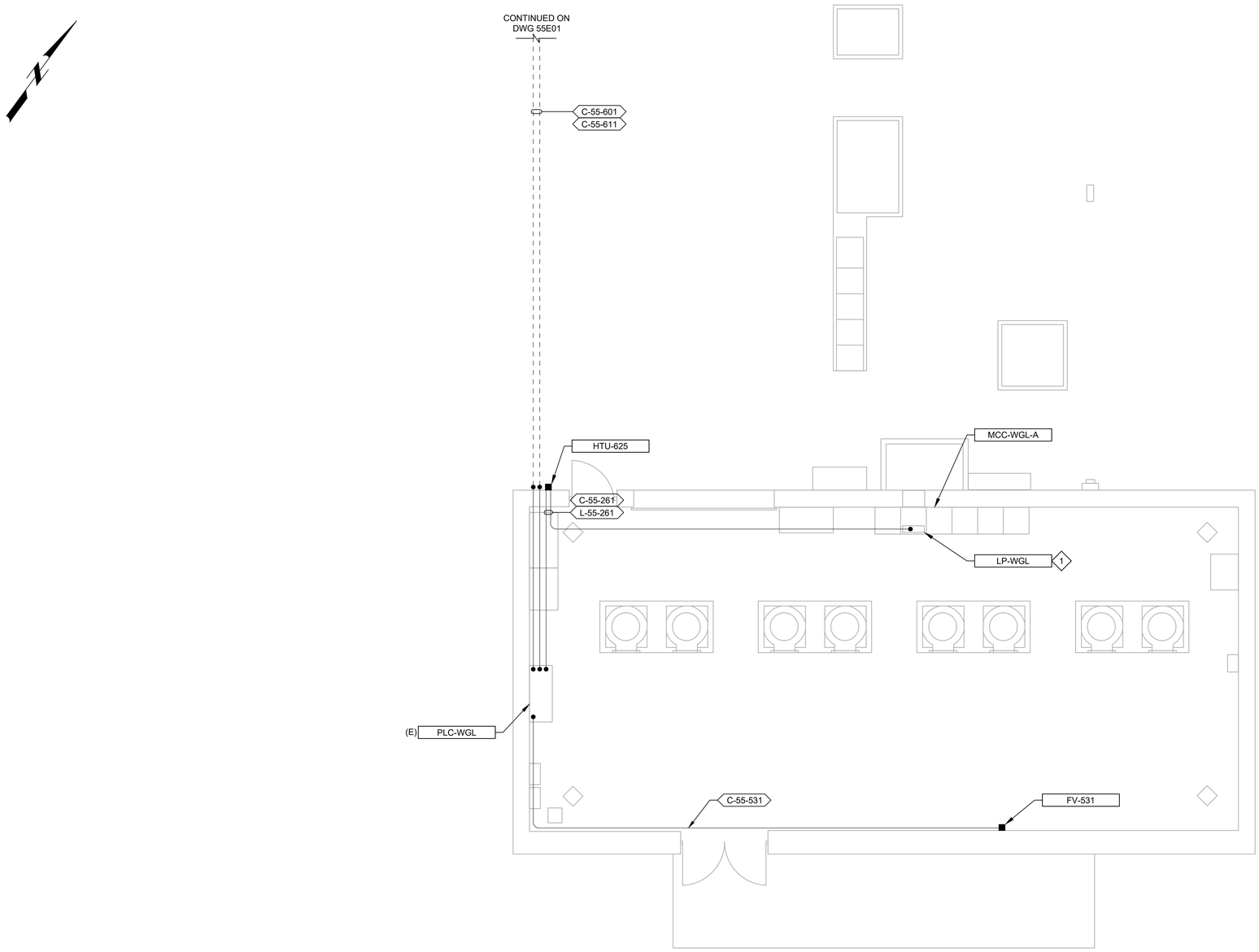

G PLAN
SCALE: 1/4" = 1' - 0"

GENERAL NOTES:

1. ROUTE EXPOSED CONDUITS PER DETAIL EA010/TYP, EA080/TYP, EM102/TYP, AND EM103/TYP AS NECESSARY.
2. INFORMATION ON THIS DRAWING IS BASED ON EXISTING RECORD DOCUMENTATION. FIELD VERIFY EXISTING CONDITIONS BEFORE WORK.

KEY NOTES:

1. TERMINATE CONDUCTORS ON EXISTING SPARE 20A CIRCUIT BREAKER IN LIGHTING PANEL.

REV	DATE	BY	DESCRIPTION
			BID SET

DESIGNED KWG
DRAWN SGH
CHECKED SLB
DATE MAY 2026

COLORADO LICENSED
SELLEN GROSS
55107
PROFESSIONAL ENGINEER

carollo

THORNTON WATER PROJECT

CITY OF THORNTON - THORNTON WATER PROJECT
CHEMICAL BUILDING AND PRV VAULTS
ELECTRICAL
WEST GRAVEL LAKES PUMP STATION
ELECTRICAL PLAN

VERIFY SCALES
BAR IS ONE INCH ON ORIGINAL DRAWING
0 1"
IF NOT ONE INCH ON THIS SHEET, ADJUST SCALES ACCORDINGLY

JOB NO. 204403
DRAWING NO. 55E02
SHEET NO. 128 OF 168

Plot Date: 1/20/2026 9:47:54 AM
LAST SAVED BY: GHerrera

PROJECT NO.:204403-100000 FILE NAME: 204403_55E02.dwg

KEY NOTES:

1. PER TYPICAL DETAIL.
2. DOUBLE WALL PIPE.

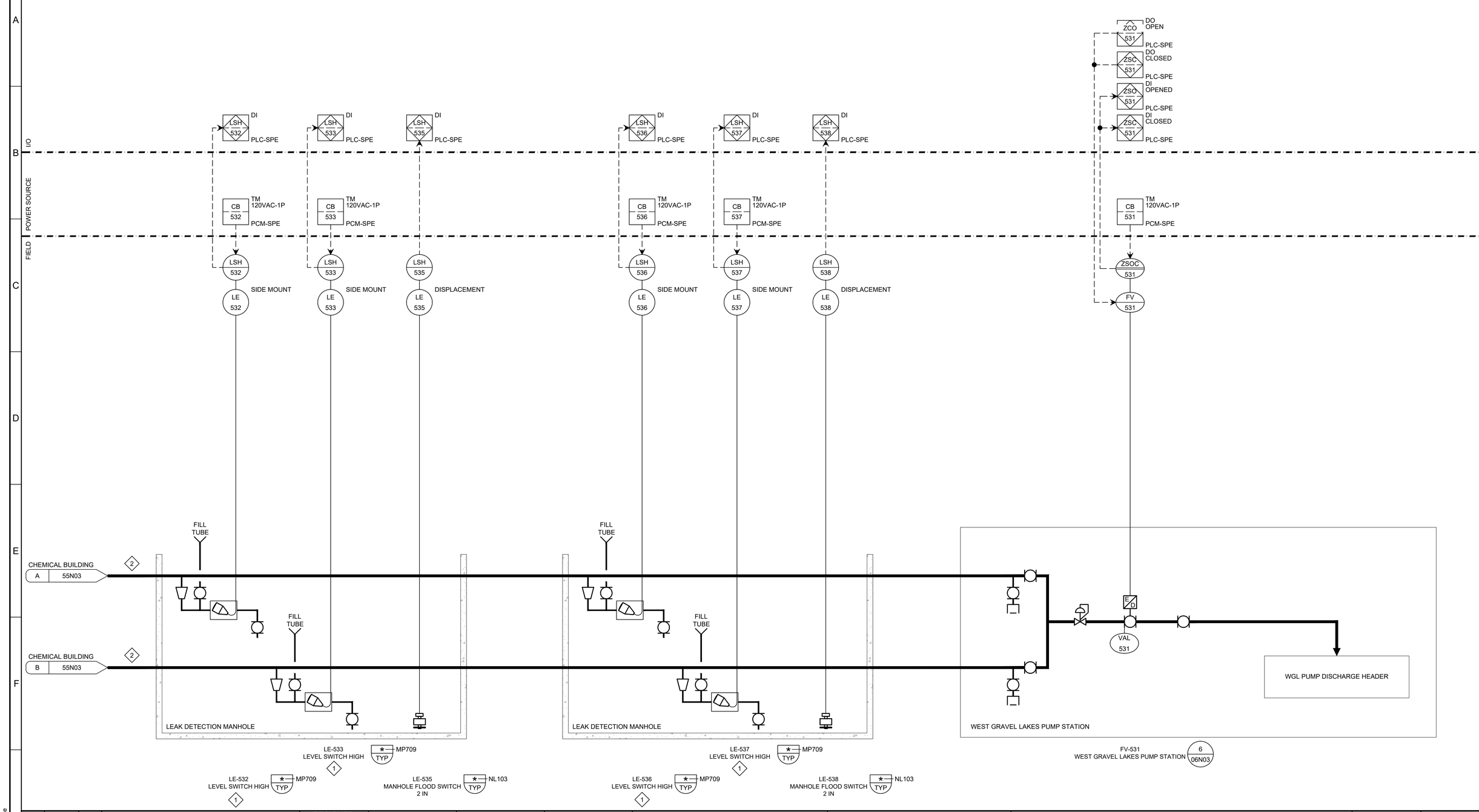

REV	DATE	BY	DESCRIPTION
			BID SET

DESIGNED RG
DRAWN DBC
CHECKED JM
DATE MAY 2026

COLORADO LICENSED PROFESSIONAL ENGINEER 55107

carollo

THORNTON WATER PROJECT

CITY OF THORNTON - THORNTON WATER PROJECT

CHEMICAL BUILDING AND PRV VAULTS

INSTRUMENTATION

WEST GRAVEL LAKES SODIUM PERMANGANATE FEED P&ID

VERIFY SCALES
BAR IS ONE INCH ON ORIGINAL DRAWING
0 1"
IF NOT ONE INCH ON THIS SHEET, ADJUST SCALES ACCORDINGLY

JOB NO. 204403
DRAWING NO. 55N01
SHEET NO. 129 OF 168

LAST SAVED BY: DCosme

PROJECT NO. 204403-100000 FILE NAME: 204403_55N01.dwg

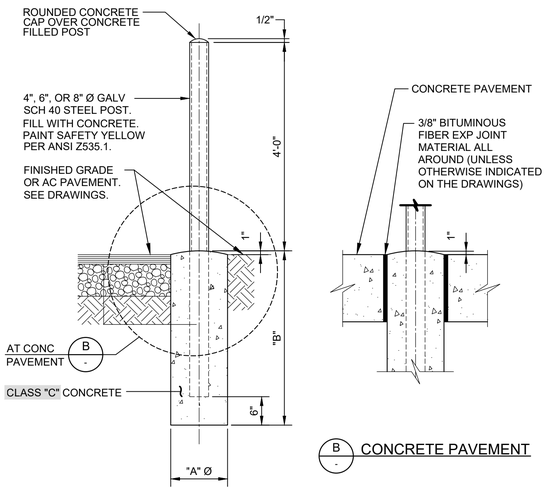

A AC PAVEMENT OR FINISHED GRADE

B CONCRETE PAVEMENT

SIZE	"A"	"B"
4"Ø	1'-3"	3'-0"
6"Ø	1'-6"	4'-0"
8"Ø	1'-9"	5'-0"

CF160 TYP — GUARD POST

N

5/21/2024

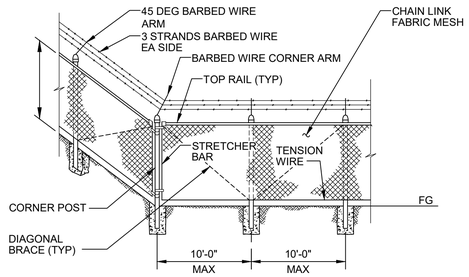

FENCE DETAIL

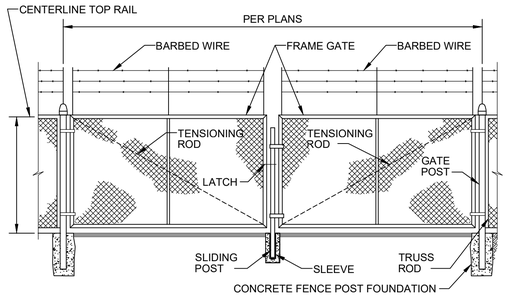

VEHICLE GATE DETAILS

CF202 TYP — FENCE AND GATE - CHAIN LINK

SHEET 1 OF 2

5/21/2024

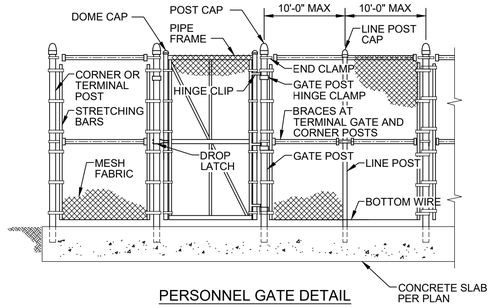

PERSONNEL GATE DETAIL

NOTE:

1. REFER TO THE SPECIFICATIONS FOR DIMENSIONS.

CF202 TYP — FENCE AND GATE - CHAIN LINK

SHEET 2 OF 2

5/21/2024

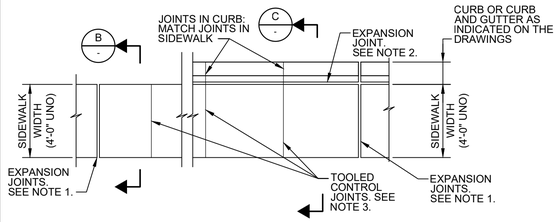

A PLAN

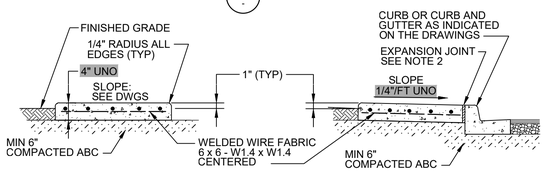

B TYPICAL SECTION

C SECTION AT CURBS

NOTES:

1. PROVIDE EXPANSION JOINTS AT ENDS OF CONCRETE PLACEMENT, AT POINTS OF CURVATURE, AT BOTH SIDES OF DRIVEWAYS, AT INTERSECTIONS, AT CORNERS OF STRUCTURES, AND AT MAXIMUM SPACING OF 30 FEET. EXPANSION JOINTS SHALL BE 3/4" WIDE BITUMINOUS FIBER WITH 1/4" RADIUS CONCRETE EDGES AT EACH SIDE.
2. PROVIDE EXPANSION JOINT AT CURB. JOINT SHALL BE 3/8" WIDE BITUMINOUS FIBER WITH 1/4" RADIUS CONCRETE EDGE AT SIDEWALK.
3. PROVIDE WEAKENED PLANE JOINTS AT UNIFORM SPACING EQUAL TO 1.0 TO 1.25 TIMES SIDEWALK WIDTH, BUT NOT GREATER THAN 10 FEET OC MAXIMUM. PROVIDE 1/4" RADIUS CONCRETE EDGES EACH SIDE AT JOINTS.
4. TOP OF CONCRETE ELEVATIONS: AS INDICATED ON THE DRAWINGS.

CR302 TYP — SIDEWALK

N

12/24/2020

LAST SAVED BY: AEvans

REV	DATE	BY	DESCRIPTION
			BID SET

DESIGNED CE
DRAWN CE
CHECKED CE
DATE MAY 2026

COLORADO LICENSED — 55165 — PROFESSIONAL ENGINEER

carollo

THORNTON WATER PROJECT

CITY OF THORNTON - THORNTON WATER PROJECT

CHEMICAL BUILDING AND PRV VAULTS

TYPICAL

TYPICAL DETAIL - CIVIL 1

VERIFY SCALES
BAR IS ONE INCH ON ORIGINAL DRAWING
0 1"
IF NOT ONE INCH ON THIS SHEET, ADJUST SCALES ACCORDINGLY

JOB NO. 204403
DRAWING NO. TC01
SHEET NO. 130 OF 168

PROJECT NO. 204403-100000 FILE NAME: 204403_TC01.dwg

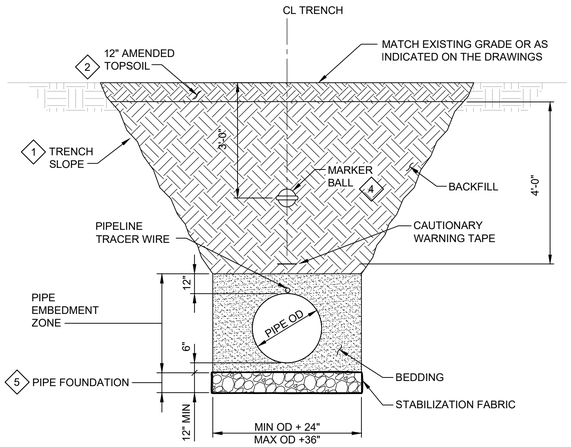

NOTES:

1. SEE SPECIFICATIONS FOR ADDITIONAL REQUIREMENTS.

CY113 TYP J — PIPE TRENCH - OPEN AREAS

SHEET 1 OF 3 01/17/23

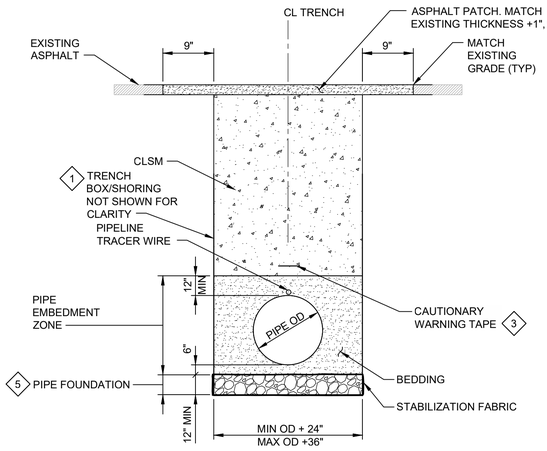

NOTES:

1. SEE SPECIFICATIONS FOR ADDITIONAL REQUIREMENTS.
2. RESTORE OPEN TRENCH GRAVEL ROADWAY SUB GRADE AND SURFACE COURSE IN ACCORDANCE WITH CITY OF THORNTON REQUIREMENTS.
3. INSTALL MARKER BALLS AT ROADWAY RIGHT-OF-WAY BOUNDARIES.

CY113 TYP J — PIPE TRENCH - ROADWAY CROSSING

SHEET 2 OF 3 01/17/23

KEY NOTES: X

1. SEE SPECIFICATIONS FOR TRENCHING, SHORING, BEDDING, AND BACKFILL REQUIREMENTS. PERFORM WORK IN ACCORDANCE WITH CURRENT OSHA REQUIREMENTS.
2. CONTRACTOR SHALL SEGREGATE 12-INCHES OF TOPSOIL AND STOCKPILE SEPARATELY FROM OTHER EXCAVATED MATERIAL. FOLLOWING BACKFILLING OF THE TRENCH, THE TOPSOIL WILL BE AMENDED AND PLACED TO MATCH PRE-CONSTRUCTION GRADE. SOIL AMENDMENT PER COT STANDARD SPECIFICATION SECTION 800. OPEN SPACE TOPSOILS SHALL BE AMENDED AS FOLLOWS: NATIVE GRASS SEEDING: BROADCAST 1500 LBS/AC BIOSOL FORTE MIX 7-2-3, OR APPROVED EQUAL, BEFORE SEEDING
3. INSTALL MARKING TAPE 8 TO 12" ABOVE TOP OF PIPE AT CENTERLINE. INSTALL 12 GA TRACER WIRE FOR THE PIPE (IN PURPLE COLOR).
4. INSTALL MARKER BALLS AT 250-FOOT INTERVALS, AT PIPELINE BENDS, AND AT ROADWAY RIGHT-OF-WAY BOUNDARIES.
5. OVEREXCAVATE WET OR UNSTABLE MATERIAL AND REPLACE WITH TRENCH STABILIZATION MATERIAL WHERE UNSUITABLE TRENCH CONDITIONS ARE ENCOUNTERED.

CY113 TYP J — PIPE TRENCH

SHEET 3 OF 3 01/17/23

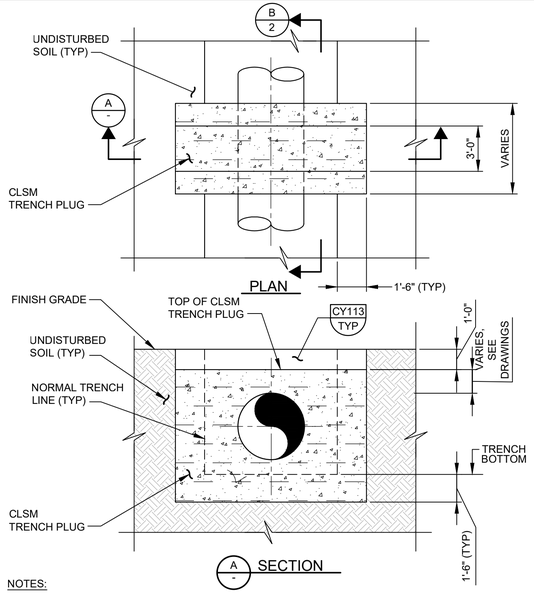

NOTES:

1. MOISTURE CONDITION AND COMPACT CLAY.
2. INSTALL TRENCH PLUGS AT MINIMUM 1,000-LF SPACING, UNLESS OTHERWISE CALLED OUT ON PLANS.

CY114 TYP J — TRENCH PLUG - CLSM

SHEET 1 OF 2 01/15/2026

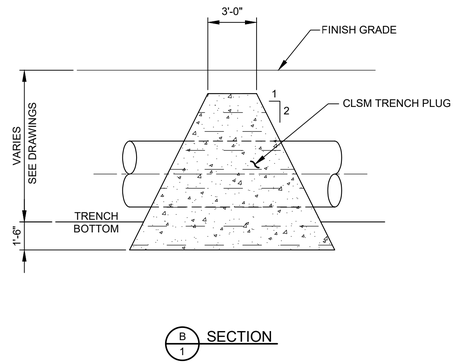

CY114 TYP J — TRENCH PLUG - CLSM

SHEET 2 OF 2 01/15/2026

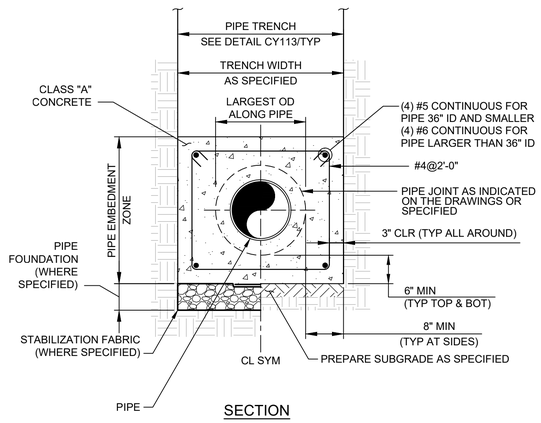

NOTE:

1. PIPE MATERIAL AND TYPE OF PIPE JOINTS OR COUPLERS AS INDICATED ON THE DRAWINGS.

CY119 TYP S — PIPE ENCASEMENT - CONCRETE

5/1/2025

REV	DATE	BY	DESCRIPTION

BID SET

DESIGNED CE
DRAWN CE
CHECKED CE
DATE MAY 2026

COLORADO LICENSED CHRISTOPHER D. EVANS 55165 Digitally signed by Courtney D. Hunter Date: 2026.03.13 13:43:53-06'00' PROFESSIONAL ENGINEER

carollo®

THORNTON WATER PROJECT

CITY OF THORNTON - THORNTON WATER PROJECT

CHEMICAL BUILDING AND PRV VAULTS

TYPICAL

TYPICAL DETAIL - CIVIL 2

VERIFY SCALES
BAR IS ONE INCH ON ORIGINAL DRAWING
0 1"
IF NOT ONE INCH ON THIS SHEET, ADJUST SCALES ACCORDINGLY

JOB NO. 204403
DRAWING NO. TC02
SHEET NO. 131 OF 168

LAST SAVED BY: AEvans

PROJECT NO. 204403-100000 FILE NAME: 204403_TC02.dwg

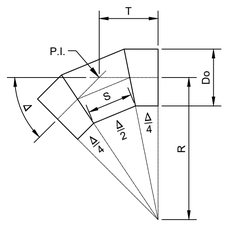

THREE-PIECE ELBOW

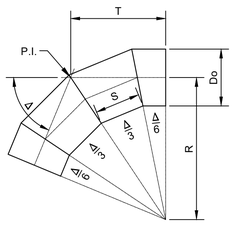

FOUR-PIECE ELBOW

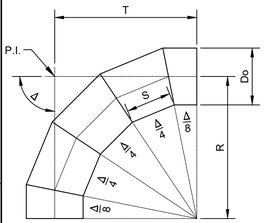

FIVE-PIECE ELBOW

SCHEDULE	
BEND ANGLE	NUMBER OF PIECES
0° < Δ ≤ 22.5°	TWO-PIECE
22.5° < Δ ≤ 45°	THREE-PIECE
45° < Δ ≤ 67.5°	FOUR-PIECE
67.5° < Δ ≤ 90°	FIVE-PIECE

NOTES:

1. DESIGN OF ALL FITTINGS SHALL BE PER AWWA C208.
2. CONTRACTOR SHALL PROVIDE DIMENSIONAL AND WALL THICKNESS CALCULATIONS FOR MITERED ELBOWS.
3. MINIMUM RADIUS SHALL BE 2.5*Do, UNLESS OTHERWISE NOTED.

CY203 TYP — STEEL PIPE - FABRICATED ELBOW

5/21/2024

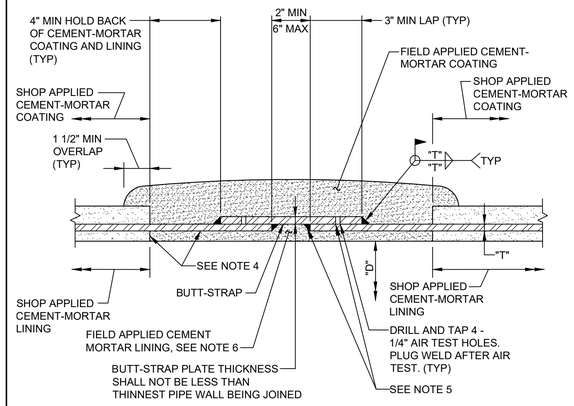

CEMENT MORTAR LINED AND COATED PIPE

CY221 TYP — STEEL PIPE - WELDED BUTT-STRAP JOINT

SN — SHEET 1 OF 4 — 08/22/22

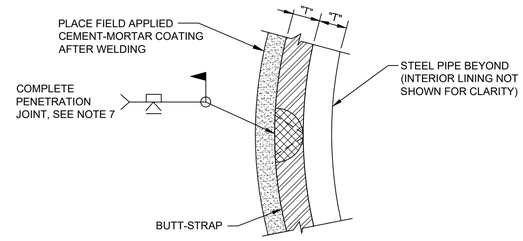

A — DETAIL - LONGITUDINAL SEAM ON BUTT-STRAP

CY221 TYP — STEEL PIPE - WELDED BUTT-STRAP JOINT

SN — SHEET 2 OF 4 — 08/22/22

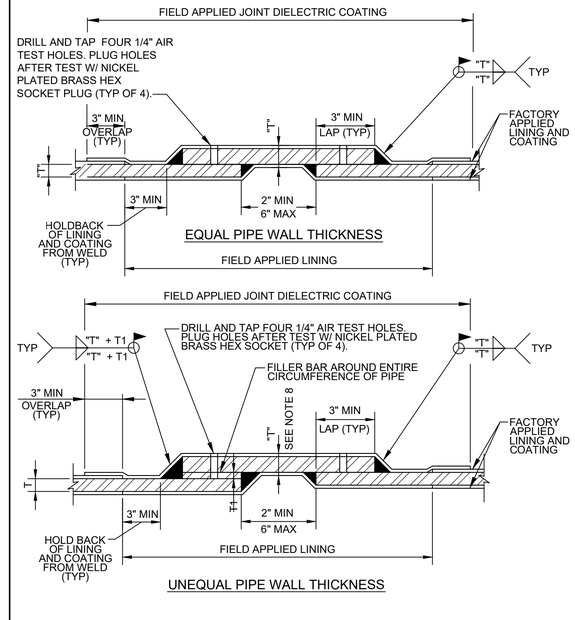

LINED AND DIELECTRIC COATED PIPE

CY221 TYP — STEEL PIPE - WELDED BUTT-STRAP JOINT

SN — SHEET 3 OF 4 — 08/22/22

NOTES:

1. "D" = PIPE DIAMETER AS INDICATED ON THE DRAWINGS OR IN THE PIPING SCHEDULE.
2. "T" = PIPE WALL THICKNESS AS INDICATED ON THE DRAWINGS OR IN THE PIPING SCHEDULE.
3. FOR WELDING SYMBOL, "T" = THICKNESS OF THINNEST MEMBER BEING WELDED.
4. COAT STEEL CYLINDER AND ENDS OF SHOP APPLIED CEMENT-MORTAR LINING WITH EPOXY BONDING AGENT BEFORE APPLYING FIELD APPLIED CEMENT-MORTAR LINING.
5. WHERE INTERIOR WELDS ARE NOT REQUIRED BY SPECIFICATIONS, REMOVE INTERIOR WELS AND TEST HOLES.
6. FINISH FIELD APPLIED CEMENT- MORTAR LINING SMOOTH AND FLUSH WITH SHOP APPLIED CEMENT-MORTAR LINING.
7. REMOVE BACKER PLATE AFTER WELDING, BACKGOUGE, AND WELD. GRIND INSIDE OF WELD FLUSH SO BUTT-STRAP FITS OVER ENDS OF PIPE.
8. IF TWO STEEL CYLINDERS OF DIFFERENT THICKNESSES ARE CONNECTED, BUTT-STRAP "T" SHALL BE THE LARGER DIMENSION OF THE TWO CYLINDERS THICKNESSES.
9. DRILL AND TAP AIR HOLE TESTS INSIDE PIPE AT CONTRACTOR'S OPTION.

CY221 TYP — STEEL PIPE - WELDED BUTT-STRAP JOINT

SN — SHEET 4 OF 4 — 08/22/22

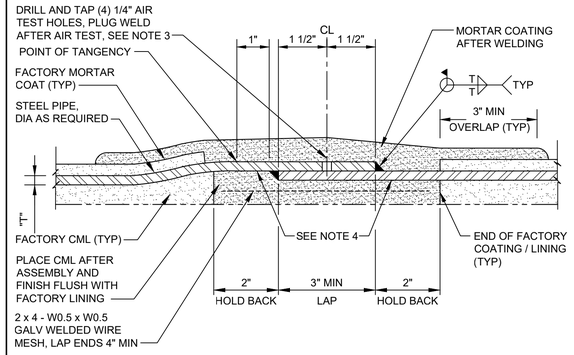

NOTES:

1. SPECIAL CLOSURE JOINTS SHALL HAVE A TWO INCH DEEPER BELL WITH 5" MIN LAP TO ALLOW FOR PIPE SHRINKAGE BEFORE WELDING.
2. "T"=THICKNESS OF THINNEST MEMBER WELDED.
3. AIR TEST HOLE MAY BE ON INSIDE OF PIPE WHERE INTERNAL WELDS ARE COMPLETED AFTER BACKFILL.
4. COAT STEEL CYLINDER PIPE AND ENDS OF SHOP APPLIED CEMENT MORTAR LINING WITH EPOXY BONDING AGENT BEFORE APPLYING FIELD APPLIED CEMENT MORTAR LINING.

CY241 TYP — STEEL PIPE - DOUBLE LAP WELD JOINT

NS — 08/22/22

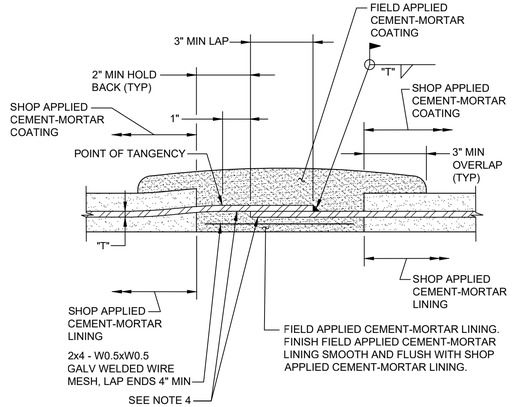

NOTES:

1. SPECIAL CLOSURE JOINTS SHALL HAVE A TWO INCH DEEPER BELL WITH 5" MIN LAP TO ALLOW FOR PIPE SHRINKAGE BEFORE WELDING.
2. "T" = PIPE WALL THICKNESS OF THINNEST MEMBER WELDED.
3. FOR "D" GREATER THAN OR EQUAL TO 24", PROVIDE 2x4-W0.5xW0.5 GALVANIZED WELDED WIRE MESH. LAP ENDS 4" MINIMUM.
4. COAT STEEL CYLINDER PIPE AND ENDS OF SHOP APPLIED CEMENT MORTAR LINING WITH EPOXY BONDING AGENT BEFORE APPLYING FIELD APPLIED CEMENT MORTAR LINING.

CY243 TYP — STEEL PIPE - SINGLE LAP WELD JOINT

N — 08/22/22

LAST SAVED BY: AEvans

REV	DATE	BY	DESCRIPTION
			BID SET

DESIGNED CE
DRAWN CE
CHECKED CE
DATE MAY 2026

COLORADO LICENSED — COREY D. NOVOTNY — 55165 — Expires: Last Day of Month 11 Calendar Months From Date Signed — Date Signed: 04-15-44-11-00:00 — PROFESSIONAL ENGINEER

carollo®

THORNTON WATER PROJECT

CITY OF THORNTON - THORNTON WATER PROJECT

CHEMICAL BUILDING AND PRV VAULTS

TYPICAL

TYPICAL DETAIL - CIVIL 3

VERIFY SCALES
BAR IS ONE INCH ON ORIGINAL DRAWING
0 1"
IF NOT ONE INCH ON THIS SHEET, ADJUST SCALES ACCORDINGLY

JOB NO. 204403
DRAWING NO. TC03
SHEET NO. 132 OF 168

PROJECT NO. 204403-100000 FILE NAME: 204403_TC03.dwg

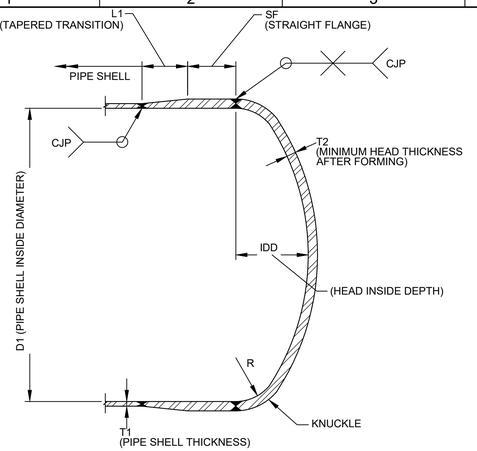

DIMENSIONS FOR DISHED HEAD								
NOMINAL DIAMETER	LOCATION DESCRIPTION	D1	T1	T2	L1 (T1-T2)	SF	R	IDD
36"	36" LCC PRV	36.75"	NOTE 3	NOTE 1	NOTE 1	NOTE 1	NOTE 1	NOTE 1

NOTES:

1. DISHED HEAD WALL THICKNESS AND HEAD INSIDE DEPTH SHALL BE PER ASME BPVC VIII DIV 1, UG-32.
2. INTERIOR LINING AND EXTERIOR COATING PER SPECIFICATIONS.
3. SEE PIPING SCHEDULE ON DRAWING 00G06.

CY313 TYP STEEL PIPE - DISHED HEAD

08/22/22

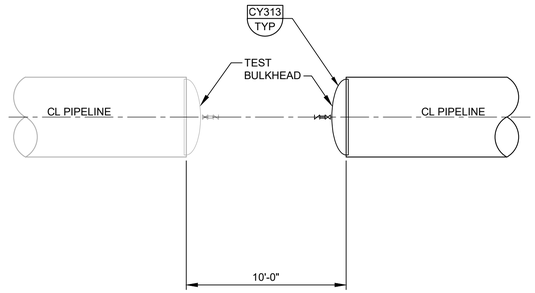

FINAL FOR TEST CONDITION

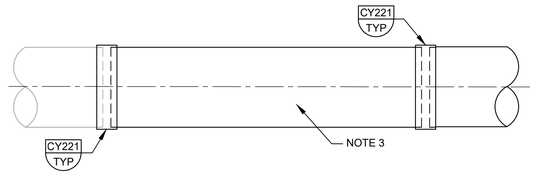

FINAL CONDITION

CY317 TYP STEEL PIPE - BUTT STRAP CLOSURE

J SHEET 1 OF 2 01/15/26

NOTES:

1. FOR LOCATION OF CLOSURE SEE PIPELINE PLANS.
2. PROVIDE ALL NECESSARY PIPE, VALVES, AND PUMPING EQUIPMENT NEEDED TO TRANSFER TESTING WATER FROM ONE PIPELINE SECTION TO THE NEXT USING THE 12" FLANGED SIDE OUTLETS.
3. COMPLETE FIELD HYDROSTATIC TEST PRIOR TO INSTALLATION OF CLOSURE.
4. PROVIDE CLOSURE SPOOL WITH 1'-0" EXCESS CUT TO FIT EA. END MINIMUM.
4. REMOVE TEST BULKHEADS AND SIDE OUTLETS AND PREPARE PIPE ENDS FOR WELDING BUTTSTRAPS. MEASURE DISTANCE BETWEEN PIPELINES AT MIN. 4 PLACES PRIOR TO CUTTING
5. CLOSURE TO FIT. PIPE ENDS SHALL BE SQUARE AND PARALLEL TO EACH OTHER.
6. PREPARE BEDDING FOR CLOSURE PIECE AND INSTALL.
7. TEST FIELD WELDS WITH AIR-SOAP TEST AND BY THE LIQUID PENETRANT METHOD.
8. FIELD LINE JOINTS WITH CEMENT MORTAR PER SPECS. STEEL TROWEL SMOOTH. COAT JOINTS AND OUTLET AND BACKFILL THE PIPELINE IN ACCORDANCE WITH THE SPECIFICATIONS.
9. BACKFILL CLOSURE WITH CLSM
10. RESTORE SURFACE TO EXISTING LINES, GRADES, FINISH AND LANDSCAPING.

CY317 TYP STEEL PIPE - BUTT STRAP CLOSURE

SHEET 2 OF 2 9/11/25

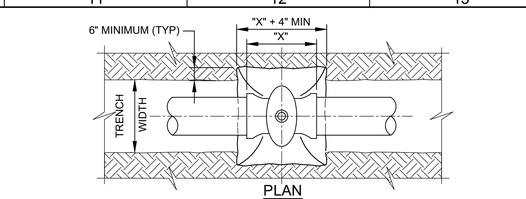

PLAN

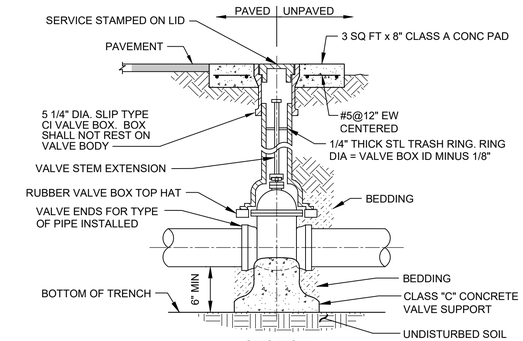

SECTION

NOTES:

1. ALL BURIED VALVES SHALL BE PROVIDED WITH EXTENSION STEM OPERATION WITH 2" SQUARE AWWA NUT WITHIN 36" OF VALVE BOX COVER. NUT IS TO INDICATE DIRECTION OF ROTATION TO OPEN VALVE.
2. COAT BURIED PIPE AND VALVE BOX AS SPECIFIED.
3. CLEAN VALVE BOX OF ALL DEBRIS AND SOIL.
4. VALVE TYPE AS INDICATED ON THE DRAWINGS.

CY716 TYP GATE VALVE - DIRECT BURY

S 10/20/20

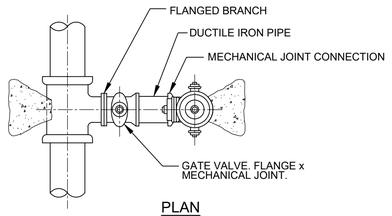

PLAN

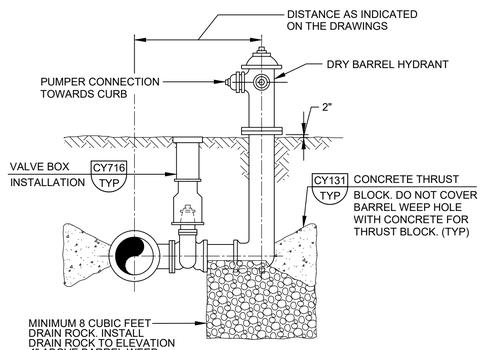

NOTE:

1. SEE DRAWINGS FOR PIPE SIZES.

ELEVATION

CY725 TYP FIRE HYDRANT AND VALVE

N SHEET 1 OF 2 08/22/22

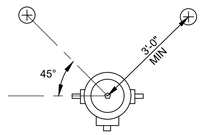

PLAN

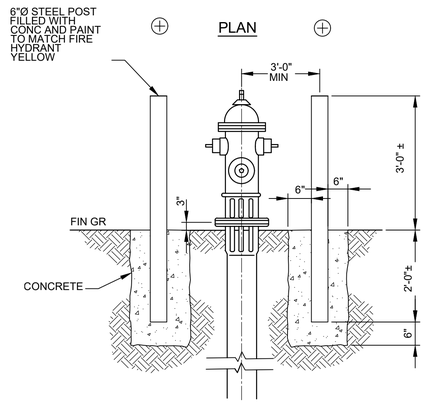

ELEVATION

NOTES:

1. TO BE USED IN COMMERCIAL OR INDUSTRIAL AREAS WHERE HYDRANTS ARE UNPROTECTED FROM THE MAIN FLOW OF TRAFFIC. STEAMER CONNECTION ON FIRE HYDRANT SHOULD FACE THE STREET.
2. FIRE HYDRANTS SHALL BE 3'-0" UNOBSTRUCTED FROM PUBLIC R.O.W. AND A MINIMUM CLEARANCE OF 3'-0" ON ALL SIDES.

CY725 TYP FIRE HYDRANT AND VALVE

N SHEET 2 OF 2 08/22/22

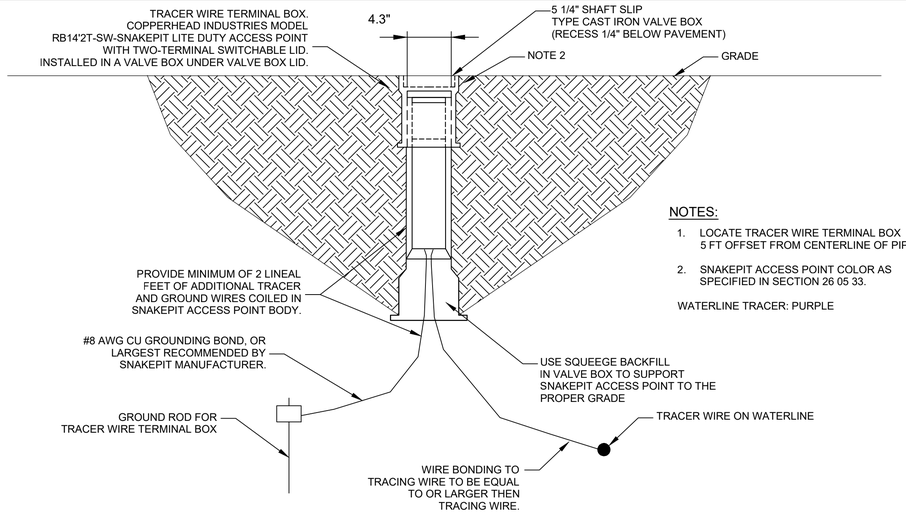

NOTES:

1. LOCATE TRACER WIRE TERMINAL BOX 5 FT OFFSET FROM CENTERLINE OF PIPE.
2. SNAKEPIT ACCESS POINT COLOR AS SPECIFIED IN SECTION 26 05 33.

WATERLINE TRACER: PURPLE

GENERAL NOTES:

1. TRACING WIRE FOR 36-INCH RAW WATER SHALL BE SOLID 12-GAUGE COPPER WITH PURPLE INSULATION.

CY729 TYP TRACING WIRE TEST STATION FOR PIPELINE

J 09/30/25

REV	DATE	BY	DESCRIPTION
			BID SET

DESIGNED CE
DRAWN CE
CHECKED CE
DATE MAY 2026

COLORADO LICENSED COURTNEY D. TURNER 55165 PROFESSIONAL ENGINEER

CITY OF THORNTON - THORNTON WATER PROJECT

CHEMICAL BUILDING AND PRV VAULTS

TYPICAL

TYPICAL DETAIL - CIVIL 4

VERIFY SCALES
BAR IS ONE INCH ON ORIGINAL DRAWING
0 1"
IF NOT ONE INCH ON THIS SHEET, ADJUST SCALES ACCORDINGLY

JOB NO. 204403
DRAWING NO. TC04
SHEET NO. 133 OF 168

LAST SAVED BY: AEvans

PROJECT NO. 204403-100000 FILE NAME: 204403_TC04.dwg

1. SEE DIVISION 03 SPECIFICATION FOR REQUIREMENTS FOR CONCRETE CONSTRUCTION.
2. UNLESS OTHERWISE INDICATED ON THE DRAWINGS, MINIMUM REINFORCEMENT OF CONCRETE WALLS OR SLABS SHALL BE AS FOLLOWS. CONTACT ENGINEER FOR LOCATIONS INSIDE CONCRETE.
   10" THICK OR LESS: .....#5 @ 12" EACH WAY.
   MORE THAN 10" THICK: .....#5 @ 12" EACH WAY, EACH FACE.
3. WALL REINFORCEMENT AT CORNERS OR JUNCTIONS OF WALLS SHALL BE CONTINUOUS, LAP SPLICED, OR TERMINATED IN AN ACI STANDARD 90 DEGREE HOOK. SEE DETAIL S144/TYP.
4. UNLESS OTHERWISE INDICATED ON THE DRAWINGS, DOWELS BETWEEN ADJACENT CONCRETE PLACEMENTS SHALL BE THE SAME SIZE AND SPACING AS THE REINFORCEMENT WHICH IS SPLICED TO THE DOWELS.
5. SLAB, BEAM AND COLUMN REINFORCING BARS SHALL HAVE A MINIMUM EXTENSION OR ANCHORAGE INTO SUPPORTS IN ACCORDANCE WITH ACI 318 AND ACI 350.
6. PROVIDE STIRRUP SUPPORT BARS SHALL BE TO SECURE TOP BARS AGAINST DISPLACEMENT AS REQUIRED.
7. UNLESS OTHERWISE INDICATED ON THE DRAWINGS, CONCRETE COVER OVER #11 AND SMALLER REINFORCING BARS SHALL BE AS FOLLOWS:
   A. SLABS AND JOISTS:
      FORMED CONCRETE SURFACES AND UNFORMED TOP SURFACES FOR DRY CONDITIONS
      #7 BARS AND SMALLER.....1"
      #8 BARS AND LARGER.....1 1/2"
      FORMED CONCRETE SURFACES AND UNFORMED TOP SURFACES EXPOSED TO WEATHER, IN CONTACT WITH SOIL OR FLUIDS, OR LOCATED OVER FLUIDS.....2"
   B. BEAMS AND COLUMNS:
      FORMED CONCRETE SURFACES FOR DRY CONDITIONS:
      STIRRUPS, SPIRALS, AND TIES.....1 1/2"
      PRINCIPAL REINFORCEMENT.....2"
      FORMED CONCRETE SURFACES EXPOSED TO WEATHER, IN CONTACT WITH SOIL OR FLUIDS, OR IN BEAMS LOCATED OVER FLUIDS:
      STIRRUPS AND TIES.....2"
      PRINCIPAL REINFORCEMENT.....2 1/2"
   C. WALLS:
      FORMED CONCRETE SURFACES FOR DRY CONDITIONS:
      #7 BARS AND SMALLER.....1"
      #8 BARS AND LARGER.....1 1/2"
      FORMED CONCRETE SURFACES EXPOSED TO WEATHER, OR IN CONTACT WITH SOIL OR FLUIDS.....2"

S101 TYP — REINFORCED CONCRETE NOTES

D. FOOTINGS AND SLABS ON GRADE:
   FORMED VERTICAL CONCRETE SURFACES.....2"
   AT UNFORMED CONCRETE SURFACES CAST AGAINST SOIL, ROCK, OR CONCRETE WORK MATS.....3"
   FORM WORK 2" TOP SURFACE OF FOOTINGS AND SLABS.....SAME AS SLABS

8. WATERSTOPS:
   A. PROVIDE WATERSTOPS AT JOINTS IN SLABS AND WALLS OF LIQUID-CONTAINING STRUCTURES, AND PORTIONS OF STRUCTURES BELOW THE DESIGN GROUNDWATER LEVEL. MAKE WATERSTOPS CONTINUOUS THROUGH STRUCTURE, SPLICING WATERSTOPS IN SLABS WITH WATERSTOPS IN WALLS.
   B. END WATERSTOPS 3" BELOW TOP OF WALLS. WHERE TOP OF WALL IS COVERED BY A SLAB WITHOUT WATERSTOPS, CONTINUE WATERSTOP TO WALL/SLAB JOINT. WHERE TOP OF WALL IS COVERED BY A SLAB WITH WATERSTOPS, MAKE WATERSTOPS CONTINUOUS, SPLICING WATERSTOPS IN WALLS WITH WATERSTOPS IN SLAB.
9. CURE CONCRETE IN ACCORDANCE WITH THE CONTRACT DOCUMENTS. WHERE WATER CURING IS SPECIFIED, MEMBRANE CURING IS NOT ALLOWED.
   A. THE CONTRACTOR IS WARNED THAT WATER CURING IS DIFFICULT AT TIMES DUE TO WIND AND DRY CONDITIONS. STUDY SPECIFICATION REQUIREMENTS AND FURNISH ADEQUATE SYSTEMS TO PROVIDE WATER CURING WHERE REQUIRED.
   B. KEEP WATER CURED SURFACES VISIBLY MOIST AT ALL TIMES. FLOOD TOPS OF WALLS NOT LESS THEN 3 TIMES DAILY.
10. DO NOT PLACE BACKFILL AGAINST WALLS UNTIL:
   A. WALLS HAVE BEEN CAST TO FULL HEIGHT OF STRUCTURE AND CONCRETE HAS REACHED THE MINIMUM SPECIFIED COMPRESSIVE STRENGTH (f'c).
   B. CONNECTING SLABS AND BEAMS HAVE BEEN CAST AND CONCRETE IN THOSE ELEMENTS HAS REACHED THE MINIMUM SPECIFIED COMPRESSIVE STRENGTH (f'c).
11. LAP SPLICES:
   A. SEE TABLE 1 OF THIS DETAIL FOR LAP SPLICE LENGTHS.
   B. WHEN MULTIPLE BARS ARE SPLICED AT THE SAME SECTION, THE "CLEAR BAR SPACING" IS DEFINED AS THE MINIMUM CLEAR DISTANCE BETWEEN THE BARS OUTSIDE THE SPLICE LENGTH MINUS ONE BAR DIAMETER.
   C. UNLESS OTHERWISE INDICATED ON THE DRAWINGS, BARS AT A LAP SPLICE SHALL BE IN CONTACT WITH EACH OTHER.
   D. "TOP BARS" ARE HORIZONTAL REINFORCEMENT AT LOCATIONS WHERE MORE THAN 12 INCHES OF FRESH CONCRETE IS CAST IN THE MEMBER BELOW THE BAR.
12. FORM EXPOSED CONCRETE CORNERS AND EDGES WITH 3/4" CHAMFER UNLESS OTHERWISE INDICATED ON THE DRAWINGS.

S101 TYP — REINFORCED CONCRETE NOTES

TABLE 1: REINFORCING BAR LAP SPLICES: f'c = 4000 PSI, Fy = 60,000 PSI

BAR SIZE	MINIMUM COVER (BAR DIA)	MINIMUM CLEAR BAR SPACING (BAR DIA)	LAP SPLICE LENGTH (INCHES)	
			TOP BARS	OTHER BARS
#4	MORE THAN 1	MORE THAN 2	32 *	25 *
	MORE THAN 2	MORE THAN 4	20	16
#5	MORE THAN 1	MORE THAN 2	40 *	31 *
	MORE THAN 2	MORE THAN 4	26	20
#6	MORE THAN 1	MORE THAN 2	48 *	37 *
	MORE THAN 2	MORE THAN 4	30	24
#7	MORE THAN 1	MORE THAN 2	70 *	54 *
	MORE THAN 2	MORE THAN 4	43	33
#8	MORE THAN 1	MORE THAN 2	81 *	62 *
	MORE THAN 2	MORE THAN 4	50	38
#9	MORE THAN 1	MORE THAN 2	90 *	70 *
	MORE THAN 2	MORE THAN 4	56	42
#10	MORE THAN 1	MORE THAN 2	104 *	81 *
	MORE THAN 2	MORE THAN 4	62	48
#11	MORE THAN 1	MORE THAN 2	114 *	88 *
	MORE THAN 2	MORE THAN 4	69	54

REINFORCING BAR LAP SPLICE TABLE NOTES:

1. TABULATED SPLICE LENGTHS ARE APPLICABLE ONLY WHEN BOTH REQUIREMENTS FOR MINIMUM COVER AND FOR MINIMUM CLEAR BAR SPACING ARE SATISFIED.
2. * = IF THE CLEAR BAR SPACING IS LESS THAN OR EQUAL TO TWO BAR DIAMETERS, OR THE COVER IS LESS THAN OR EQUAL TO ONE BAR DIAMETER, THE LAP SPLICE LENGTH SHALL BE INCREASED BY 50 PERCENT.

S101 TYP — REINFORCED CONCRETE NOTES

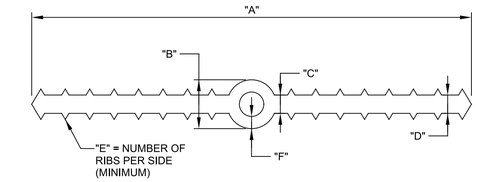

TYPE	"A"	"B"	"C"	"D"	"E"	"F"	APPLICATION
W/O CENTER BULB	6"	-	3/8"	3/8"	7	-	CONSTRUCTION AND CONTROL JOINTS
CENTER BULB	6"	7/8"	3/8"	3/8"	7	9/32"	FOR USE WITH DETAIL EM071/TYP ONLY
CENTER BULB	9"	1"	3/8"	3/8"	7	1/4"	EXPANSION JOINTS 1" AND NARROWER
CENTER BULB	9"	2"	3/8"	3/8"	7	1/4"	EXPANSION JOINTS WIDER THAN 1" AND TENSION/COMPRESSION RING BEAM AT DIGESTERS

NOTES:

1. SEE SPECIFICATIONS FOR MATERIAL REQUIREMENTS.
2. DIMENSIONS ARE MINIMUM, UNLESS OTHERWISE NOTED.

S106 TYP — PVC WATERSTOP SCHEDULE

12/15/20

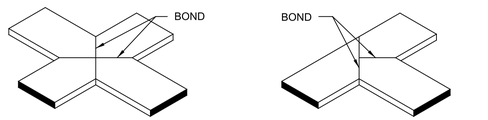

IN-PLANE JOINTS

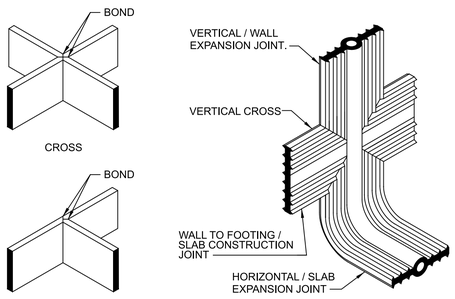

OUT-OF-PLANE JOINTS

NOTES:

1. MAKE WELDS AS SPECIFIED AND IN ACCORDANCE WITH THE MANUFACTURER'S RECOMMENDATIONS.
2. CROSSES AND TEES SHALL BE FACTORY PREFABRICATED BY THE MANUFACTURER. FIELD WELDS SHALL BE BUTT WELDS ONLY.

S107 TYP — PREFABRICATED PVC WATERSTOP JOINTS

07/08/16

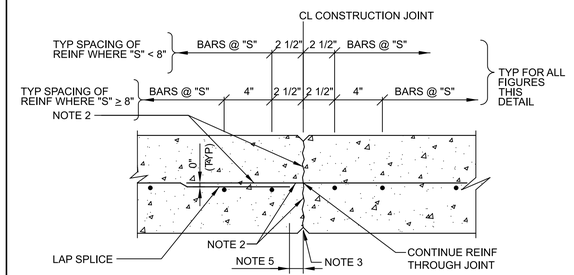

NON-WATER BEARING WALL OR SLAB
SINGLE LAYER REINFORCEMENT

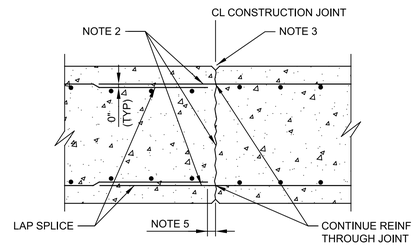

NON-WATER BEARING WALL OR SLAB
DOUBLE LAYER REINFORCEMENT

S110 TYP — CONSTRUCTION JOINT

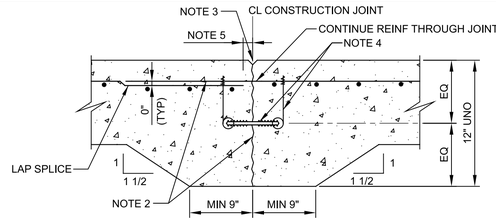

WATER BEARING SLAB LESS THAN 12" THICK

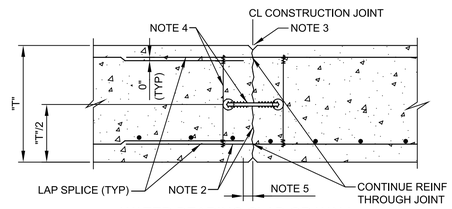

WATER BEARING SLAB OR WALL

NOTES:

1. "S" EQUALS TYPICAL BAR SPACING INDICATED ON THE DRAWINGS. "T" EQUALS SLAB OR WALL THICKNESS.
2. WATER-BLAST EXPOSED JOINT FACE AND PROJECTING REINFORCEMENT BEFORE PLACING CONCRETE.
3. JOINT EDGES:
   A. FOR WALLS AND BOTTOM OF EXPOSED SLABS: FORM EDGES WITH 1/2" CHAMFER.
   B. FOR SLABS: EDGE TOP AND ENDS WITH 1/4" RADIUS.
4. 6" WATERSTOP CENTERED ON JOINT - SEE DETAIL S106/TYP. PROVIDE WIRE TIES MAX 2'-0" OC. HOG RINGS MAY BE USED IN LIEU OF WIRE LOOPS. THOROUGHLY CLEAN WATERSTOP BEFORE PLACING CONCRETE IN SECOND POUR.
5. STOP REINFORCING 2" CLEAR OF JOINT.

S110 TYP — CONSTRUCTION JOINT

0

REV	DATE	BY	DESCRIPTION
			BID SET

DESIGNED CE
DRAWN CE
CHECKED MAK
DATE APRIL 2026

COLORADO REGISTERED PROFESSIONAL ENGINEER 34300 — digitally signed by Mark Alan Kluever; Carollo Engineers, PC; date: 2026.04.03 13:03:52 -06'00'

carollo®

THORNTON WATER PROJECT

CITY OF THORNTON - THORNTON WATER PROJECT
CHEMICAL BUILDING AND PRV VAULTS
STRUCTURAL
TYPICAL DETAILS 1

VERIFY SCALES
BAR IS ONE INCH ON ORIGINAL DRAWING
0 1"
IF NOT ONE INCH ON THIS SHEET, ADJUST SCALES ACCORDINGLY

JOB NO. 204403
DRAWING NO. 00TS01
SHEET NO. 134 OF 168

PROJECT NO. 204403-100000 FILE NAME: 20440300TS01.dgn

Plot Date: 27-MAR-2026 8:18:54 AM
User: svcPW
PlotScale: 1:1
DesignScript: Carollo_Std_Pen_v0905.pen
ColorTable: gshade.ctb
Model: Layout1
LAST SAVED BY: JBaumbarger

Plot Date: 27-MAR-2026 8:18:58 AM
User: svcPW
PlotScale: 1:1
DesignScript: Carollo_Std_Pen_v0905.pen
ColorTable: gshade.ctb
Model: Layout1
LAST SAVED BY: JBaumbarger

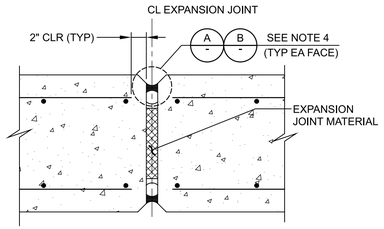

NON-WATER BEARING SLAB OR WALL

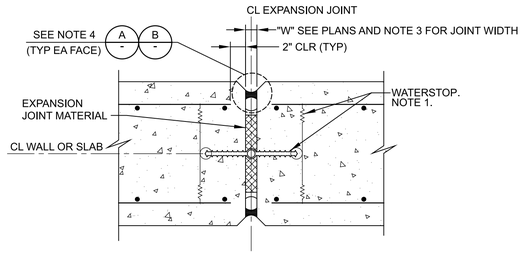

WATER BEARING SLAB OR WALL

S130 TYP S — EXPANSION JOINT

SHEET 1 OF 2 07/22/16

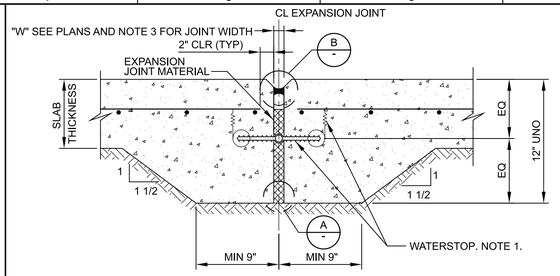

WATER BEARING SLAB LESS THAN 12" THICK

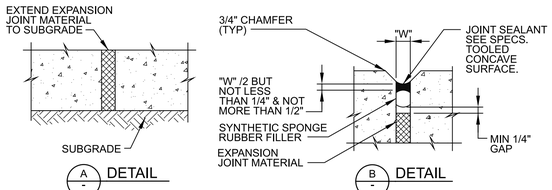

NOTES:

1. 9" WATERSTOP WITH CENTER BULB CENTERED ON JOINT - SEE DETAIL S106/TYP. PROVIDE WIRE TIES MAX 2'-0" OC. HOG RINGS MAY BE USED IN LIEU OF WIRE LOOPS. THOROUGHLY CLEAN WATERSTOP BEFORE PLACING CONCRETE IN SECOND POUR.
2. JOINT EDGES:
   A. FOR WALLS AND BOTTOM OF EXPOSED SLABS: FORM EDGES WITH 3/4" CHAMFER.
   B. FOR SLABS: EDGE TOP AND ENDS WITH 1/4" RADIUS.
3. "W"=1" UNLESS OTHERWISE INDICATED ON PLANS. (MIN JOINT WIDTH = 3/8". MAX JOINT WIDTH = 2")
4. USE DETAIL A ONLY AT SOIL SIDE OF SLABS ON GRADE. USE DETAIL B AT ALL OTHER LOCATIONS.

S130 TYP S — EXPANSION JOINT

SHEET 2 OF 2 07/22/16

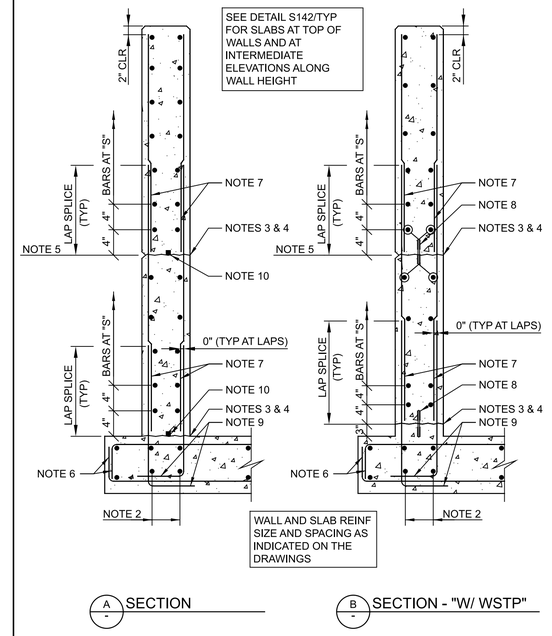

S140 TYP S, N — CONSTRUCTION JOINT - WALLS

SHEET 1 OF 2 03/12/19

NOTES:

1. "S" EQUALS TYPICAL BAR SPACING INDICATED ON THE DRAWINGS.
2. PLACE AND ALIGN BARS BEFORE PLACING DOWELS. BAR SIZE TO MATCH SLAB BARS.
3. WATER-BLAST JOINT FACE AND PROJECTING REINFORCEMENT BEFORE PLACING CONCRETE.
4. PLACE CEMENT GROUT OVER JOINT FACE IMMEDIATELY BEFORE PLACING CONCRETE. (SEE SPECIFICATIONS.)
5. CONSTRUCTION JOINT WHERE INDICATED ON THE DRAWINGS. WHERE WALL SURFACE IS EXPOSED TO VIEW IN THE FINISHED WORK, PROVIDE V-GROOVE PER DETAIL S162/TYP.
6. STANDARD 90° HOOK WHERE INDICATED ON THE DRAWINGS. (ALTERNATE: PROVIDE 180° HOOK WHERE REQUIRED BY SLAB THICKNESS.)
7. DOWELS: SAME SIZE AND SPACING AS VERTICAL WALL BARS, UNLESS OTHERWISE NOTED.
8. 6" PVC WATERSTOP CENTERED VERTICALLY ON JOINT. PROVIDE WIRE TIES MAX 2'-0" OC. HOG RINGS MAY BE USED IN LIEU OF WIRE LOOPS. THOROUGHLY CLEAN WATERSTOP BEFORE PLACING CONCRETE.
9. STANDARD 90° HOOK UNLESS OTHERWISE INDICATED ON THE DRAWINGS.
10. WHERE DRAWINGS INDICATE "W/ STRIP WSTP" PROVIDE LOW EXPANSION HYDROPHILIC WATERSTOP AT TOP SURFACE OF JOINT AND CENTERED BETWEEN VERTICAL BARS.

S140 TYP S, N — CONSTRUCTION JOINT - WALLS

SHEET 2 OF 2 03/12/19

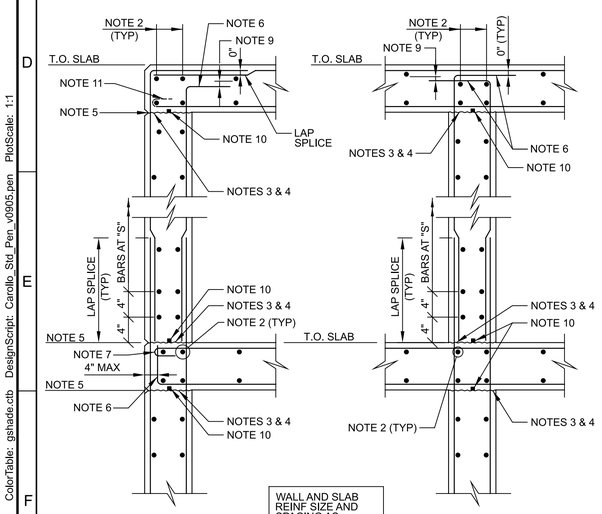

SLAB AT 1 SIDE SLAB AT 2 SIDES

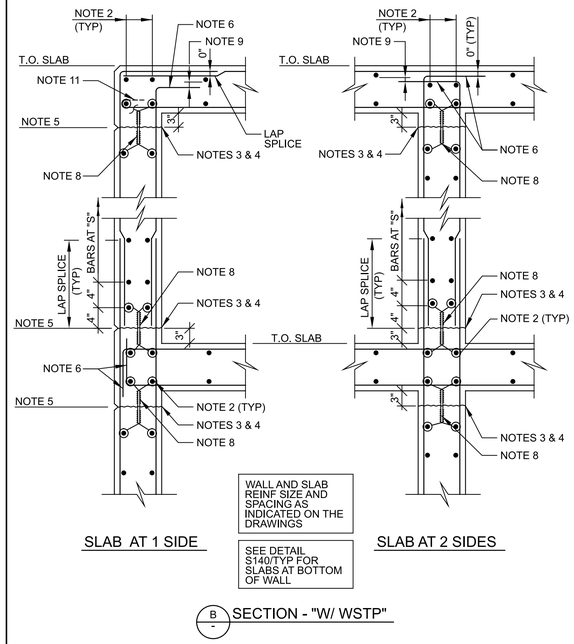

SLAB AT 1 SIDE SLAB AT 2 SIDES

S142 TYP S, N — CONSTRUCTION JOINT - WALLS AT ELEVATED SLABS

SHEET 1 OF 3 03/12/19

S142 TYP S,N — CONSTRUCTION JOINT - WALLS AT ELEVATED SLABS

SHEET 2 OF 3 03/12/19

NOTES:

1. "S" EQUALS TYPICAL BAR SPACING INDICATED ON THE DRAWINGS.
2. AT INTERSECTION, MAKE BAR SIZE THE LARGER OF BAR SIZES IN ADJACENT SLAB OR WALL. PLACE BARS AT SAME LAYERS AS IN ADJACENT SLAB OR WALL.
3. WATER-BLAST JOINT FACE AND PROJECTING REINFORCEMENT BEFORE PLACING CONCRETE.
4. PLACE CEMENT GROUT OVER JOINT FACE IMMEDIATELY BEFORE PLACING CONCRETE. (SEE SPECIFICATIONS)
5. CONSTRUCTION JOINT WHERE INDICATED ON THE DRAWINGS. WHERE WALL SURFACE IS EXPOSED TO VIEW IN THE FINISHED WORK, PROVIDE V-GROOVE PER DETAIL S162/TYP.
6. STANDARD 90° HOOK UNLESS OTHERWISE INDICATED ON THE DRAWINGS.
7. STANDARD 180° HOOK (ALTERNATE: 90° HOOK ROTATED OUT OF VERTICAL PLANE IF APPROVED BY ENGINEER.)
8. 6" PVC WATERSTOP CENTERED VERTICALLY ON JOINT. PROVIDE WIRE TIES MAX 2'-0" OC. HOG RINGS MAY BE USED IN LIEU OF WIRE LOOPS. THOROUGHLY CLEAN WATERSTOP BEFORE PLACING CONCRETE.
9. 1 BAR DIAMETER CLEAR.
10. WHERE DRAWINGS INDICATE "W/ STRIP WSTP" PROVIDE LOW EXPANSION HYDROPHILIC WATERSTOP AT TOP SURFACE OF JOINT AND CENTERED BETWEEN VERTICAL BARS.
11. STANDARD 180° HOOK WHERE INDICATED ON THE DRAWINGS.

S142 TYP S,N — CONSTRUCTION JOINT - WALLS AT ELEVATED SLABS

SHEET 3 OF 3 03/12/19

0

REV	DATE	BY	DESCRIPTION
			BID SET

DESIGNED CE
DRAWN CE
CHECKED MAK
DATE APRIL 2026

COLORADO REGISTERED PROFESSIONAL ENGINEER 34300 Digitally signed by Mark Alan Kiser Date: 2026.03.03 08:05:13 -07'00'

CITY OF THORNTON - THORNTON WATER PROJECT

CHEMICAL BUILDING AND PRV VAULTS

STRUCTURAL

TYPICAL DETAILS 2

VERIFY SCALES
BAR IS ONE INCH ON ORIGINAL DRAWING
0 1"
IF NOT ONE INCH ON THIS SHEET, ADJUST SCALES ACCORDINGLY

JOB NO. 204403
DRAWING NO. 00TS02
SHEET NO. 135 OF 168

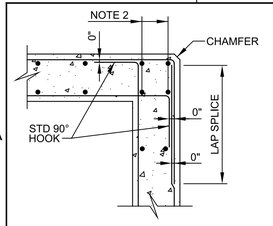

A DETAIL - CORNER: DOUBLE MAT

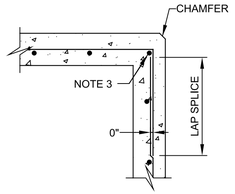

B DETAIL - CORNER: SINGLE MAT

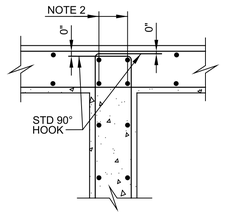

C DETAIL - INTERSECTION: DOUBLE MAT

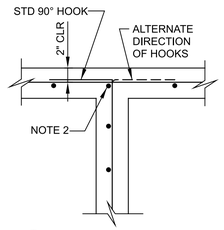

D DETAIL - INTERSECTION: SINGLE MAT

NOTES:

1. BAR SIZE, SPACING, AND ORIENTATION OF BAR LAYERS SHALL BE AS INDICATED ON THE DRAWINGS.
2. AT INTERSECTION, MAKE BAR SIZE THE LARGER OF BAR SIZES IN CONNECTING WALLS. PLACE BARS IN SAME LAYERS AS AT CONNECTING WALLS (TYP).
3. BAR TAILS: 12 BAR DIAMETERS PLUS 12".

S144 TYP S — WALL REINFORCEMENT AT CORNERS & INTERSECTIONS

SHEET 1 OF 2 05/31/16

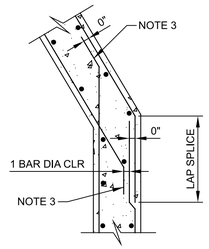

E DETAIL - INTERSECTION: DOUBLE MAT

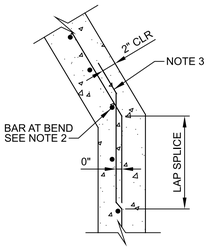

F DETAIL - INTERSECTION: SINGLE MAT

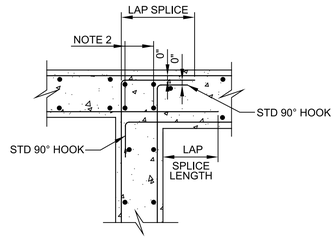

G DETAIL - INTERSECTION: CHANGE IN WALL THICKNESS

S144 TYP S — WALL REINFORCEMENT AT CORNERS & INTERSECTIONS

SHEET 2 OF 2 05/31/16

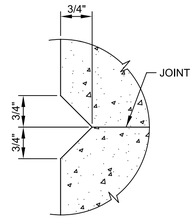

S162 TYP N — V-GROOVE JOINT

07/21/16

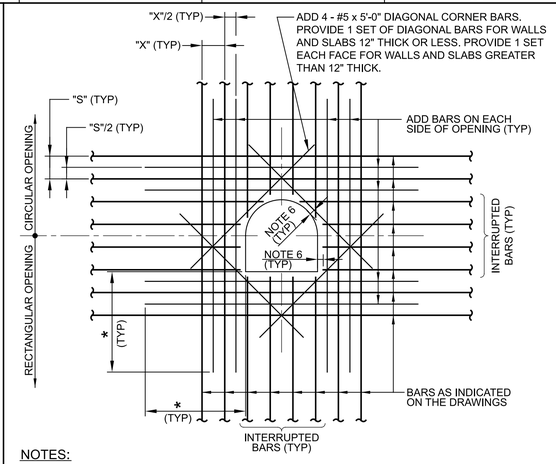

NOTES:

1. AREA OF ADD BARS AT EACH EDGE OF OPENING IN EACH DIRECTION SHALL BE EQUAL TO OR GREATER THAN 1/2 THE CROSS SECTIONAL AREA OF THE INTERRUPTED BARS.
2. PROVIDE STANDARD ACI HOOKS ON BARS IF STRAIGHT EXTENSION PAST THE OPENING, CANNOT BE ACHIEVED.
3. PLACE ADD BARS IN SAME PLANES AS INTERRUPTED REINFORCING.
4. PLACE #5 DIAGONAL BARS ON INSIDE OF INTERRUPTED REINFORCING.
5. * DIMENSION EQUALS OPENING DIMENSION MEASURED PERPENDICULAR TO ADD BARS PLUS LAP SPLICE LENGTH.
6. 2" CLEAR TO CONCRETE OPENINGS OR OUTSIDE FACE OF PIPES AND PIPE SLEEVES. DO NOT OVERCUT REINFORCEMENT FOR EASIER PLACEMENT OF WEEP RINGS AND FLANGES.
7. ADD BARS ARE NOT REQUIRED AT SIDES OF OPENINGS PARALLEL TO AND WITHIN 6" OF A WALL OR BEAM.

S180 TYP S, N — ADDITIONAL REINFORCING AT OPENINGS IN CONCRETE SLABS OR WALLS

03/12/19

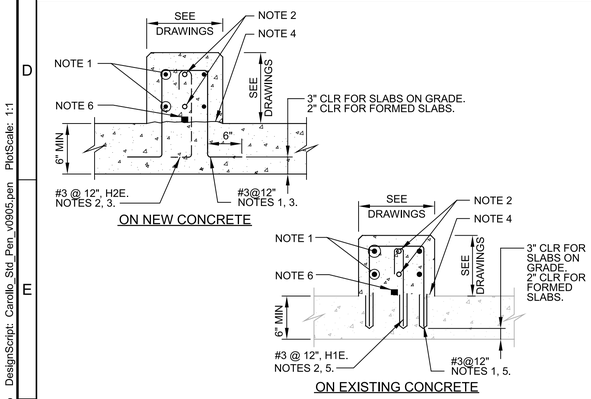

NOTES:

1. FOR CURB WIDTH > 10": HORIZ REINF: 1 - #4 EACH FACE FOR EACH 12" HEIGHT.
2. FOR CURB WIDTH ≤ 10". HORIZ REINF: 1 - #4 INSIDE 180° HOOK, ADD 1 - #4 HORIZ FOR EACH 12" HEIGHT.
3. HOOK PARALLEL TO CURB WHERE REQD.
4. REMOVE EXISTING COATINGS. ROUGHEN CONCRETE TO 1/4" AMPLITUDE. CLEAN AND APPLY EPOXY RESIN/PORTLAND CEMENT BONDING AGENT BEFORE PLACING CURB.
5. SET NEW REINF IN EXISTING CONCRETE USING DETAIL S194/TYP.
6. FOR CURB 10" & WIDER: WHERE DRAWINGS INDICATE "W/STRIP WSTP," PROVIDE LOW EXPANSION HYDROPHILIC WATERSTOP AT TOP SURFACE OF JOINT AND CENTERED BETWEEN VERTICAL #3'S. WRAP STRIP WATERSTOP UP VERTICAL END WHERE CURB ABUTS WALL OR COLUMN. STOP STRIP MIN 4" BELOW TOP OF CURB.

S184 TYP S — CONCRETE CURB

04/26/17

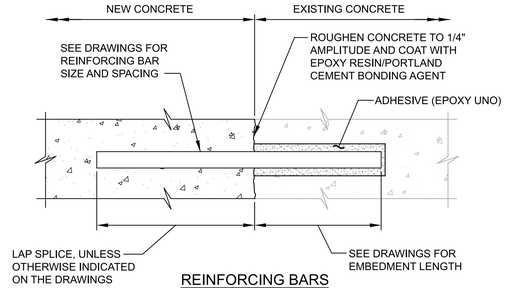

REINFORCING BARS

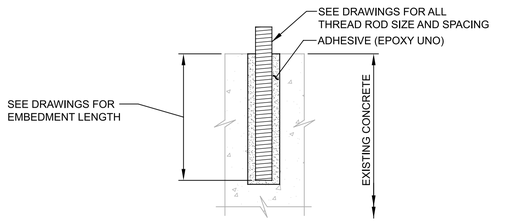

ALL-THREAD RODS

NOTE:

1. INSTALLATION OF REINFORCING BARS AND ALL THREAD RODS AS INDICATED IN THE SPECIFICATIONS.

S194 TYP S — ADHESIVE BONDED REINFORCING BARS OR ALL THREAD RODS

04/18/17

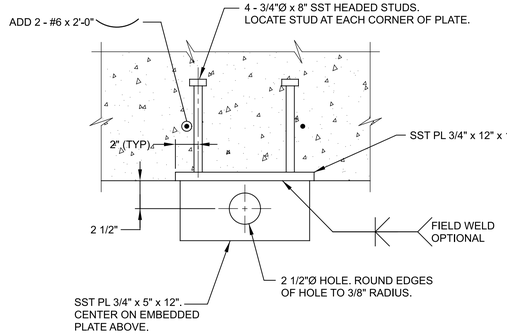

NOTE:

1. VERTICAL LOAD LIMIT EQUALS 4000 POUNDS.

S252 TYP — LIFTING EYE

08/01/05

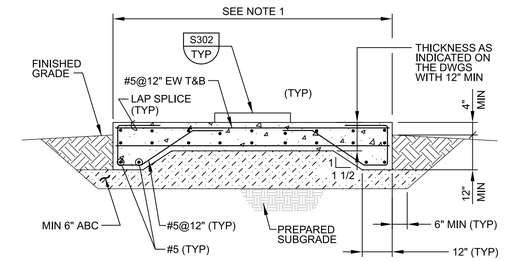

NOTE:

1. DIMENSIONS AS REQUIRED TO SUIT EQUIPMENT OR AS INDICATED ON THE DRAWINGS.

S300 TYP S — EQUIPMENT SLAB

12/15/20

0

REV	DATE	BY	DESCRIPTION
			BID SET

DESIGNED CE
DRAWN CE
CHECKED MAK
DATE APRIL 2026

COLORADO REGISTERED PROFESSIONAL ENGINEER 34300 Digitally signed by Mark Alan Kiser Date: 2026.03.27 08:05:13 -06'00'

carollo®

THORNTON WATER PROJECT

CITY OF THORNTON - THORNTON WATER PROJECT

CHEMICAL BUILDING AND PRV VAULTS

STRUCTURAL

TYPICAL DETAILS 3

VERIFY SCALES
BAR IS ONE INCH ON ORIGINAL DRAWING
0 1"
IF NOT ONE INCH ON THIS SHEET, ADJUST SCALES ACCORDINGLY

JOB NO. 204403
DRAWING NO. 00TS03
SHEET NO. 136 OF 168

PROJECT NO. 204403-100000 FILE NAME: 20440300TS03.dgn

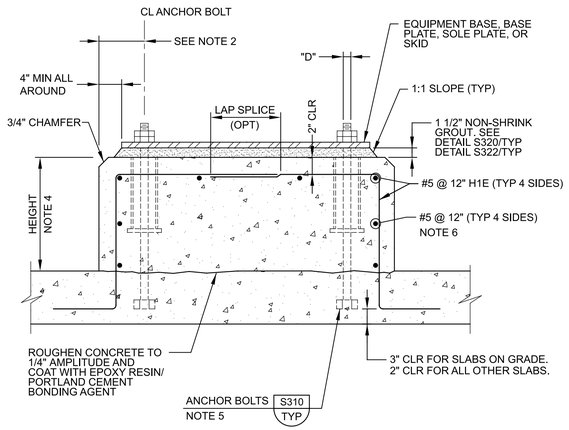

NOTES:

1. "D" = DIAMETER OF ANCHOR BOLT.
2. THE EDGE DISTANCE ON THE ANCHOR BOLTS SHALL NOT BE LESS THAN 6" OR 8 x "D".
3. PAD DIMENSIONS AND ANCHOR BOLT SIZE SHALL CONFORM TO EQUIPMENT MANUFACTURER'S REQUIREMENTS.
4. HEIGHT TO SUIT EQUIPMENT FURNISHED OR AS INDICATED ON THE DRAWINGS.
5. WHERE CONCRETE SLAB OR BEAM THICKNESS WILL NOT ACCOMMODATE THE ANCHOR BOLT, PROVIDE EXTRA THICKNESS FOR SLAB OR BEAM.
6. PROVIDE HOOPS OR CORNERS PER DETAIL S144/TYP.

S302 TYP — EQUIPMENT BASE

N 12/29/2017

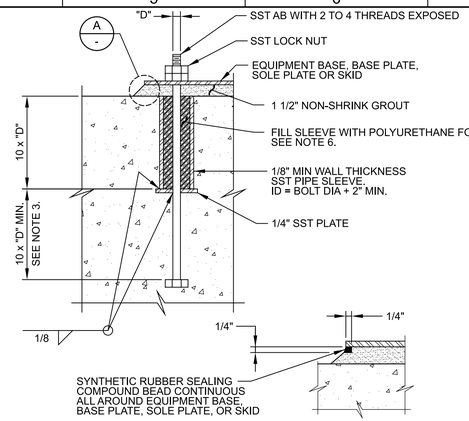

NOTES:

1. "D" = DIAMETER OF ANCHOR BOLT.
2. ANCHOR BOLT DIAMETER AS INDICATED ON THE DRAWINGS. IF NOT INDICATED ON THE DRAWINGS, THE ANCHOR BOLT SIZE SHALL BE AS RECOMMENDED BY THE EQUIPMENT MANUFACTURER.
3. WHERE CONCRETE SLAB OR BEAM THICKNESS WILL NOT ACCOMMODATE THE ANCHOR BOLT, PROVIDE EXTRA THICKNESS OF SLAB OR BEAM.
4. PREFABRICATED PLASTIC ANCHOR BOLT SLEEVE OPTIONAL.
5. DO NOT USE ALL THREAD RODS AS A SUBSTITUTE FOR BOLTS WITH A BOLT HEAD. SMOOTH RODS THREADED AT THE ENDS MAY BE USED IF ACCEPTABLE TO THE ENGINEER. DO NOT WELD NUTS TO THE THREADED RODS.
6. COMPLETELY REMOVE ANY POLYURETHANE FOAM FROM CONCRETE, EQUIPMENT BASE, BASE PLATE, SOLE PLATE, OR SKID, AND ANCHOR BOLTS ABOVE TOP OF CONCRETE.
7. DO NOT USE LEVELING NUTS TO SUPPORT AND LEVEL EQUIPMENT BASE, BASE PLATE, SOLE PLATE, OR SKID.

S310 TYP — ANCHOR BOLT - EMBED AND SLEEVE

N 05/20/15

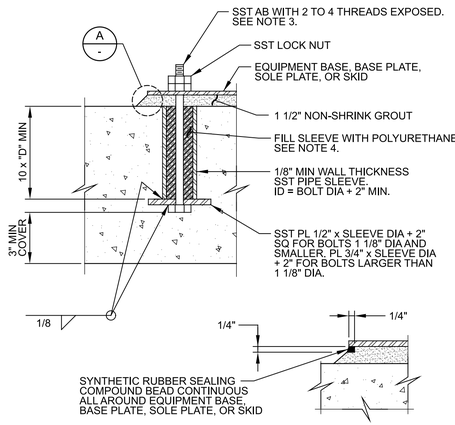

NOTES:

1. "D" = DIAMETER OF ANCHOR BOLT.
2. ANCHOR BOLT DIAMETER AS INDICATED ON THE DRAWINGS. IF NOT INDICATED ON THE DRAWINGS, THE ANCHOR BOLT SIZE SHALL BE AS RECOMMENDED BY THE EQUIPMENT MANUFACTURER.
3. DO NOT USE ALL THREAD RODS AS A SUBSTITUTE FOR BOLTS WITH A BOLT HEAD.
4. COMPLETELY REMOVE ANY POLYURETHANE FOAM FROM CONCRETE, EQUIPMENT BASE, BASE PLATE, SOLE PLATE, OR SKID, AND ANCHOR BOLTS ABOVE TOP OF CONCRETE.
5. DO NOT USE LEVELING NUTS TO SUPPORT AND LEVEL EQUIPMENT BASE, BASE PLATE, SOLE PLATE, OR SKID.

S312 TYP — ANCHOR BOLT - IN SLEEVE

N 05/20/15

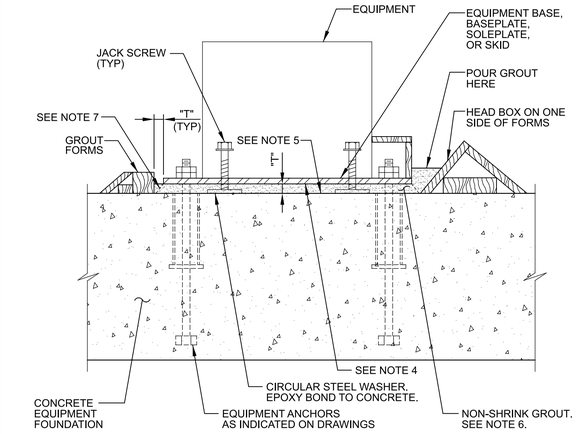

NOTES:

1. "T" = EQUALS GROUT THICKNESS INDICATED ON THE DRAWING. 1" MINIMUM GROUT THICKNESS.
2. FILL ANCHOR SLEEVES WITH POLYURETHANE FOAM BEFORE GROUTING.
3. DO NOT USE LEVELING NUTS ON EQUIPMENT ANCHORS.
4. PREPARE SURFACE OF EQUIPMENT BASES, BASE PLATES, SOLE PLATES, AND SKIDS IN CONTACT WITH GROUT AS SPECIFIED IN SECTION 46_05_10.
5. PREPARE SURFACES OF CONCRETE FOUNDATION IN CONTACT WITH GROUT AS SPECIFIED IN SECTION 46_05_10.
6. PLACE NON-SHRINK GROUT AS SPECIFIED IN SECTION 46_05_10.
7. AFTER GROUT SETS, TRIM GROUT TO 45 DEGREE CHAMFER.

S320 TYP — EQUIPMENT GROUTING WITH NON-SHRINK GROUT

J 12/15/20

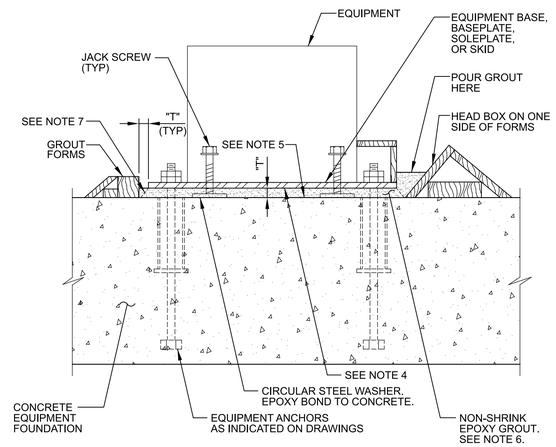

NOTES:

1. "T" = EQUALS GROUT THICKNESS INDICATED ON THE DRAWING. 1" MINIMUM GROUT THICKNESS.
2. FILL ANCHOR SLEEVES WITH POLYURETHANE FOAM BEFORE GROUTING.
3. DO NOT USE LEVELING NUTS ON EQUIPMENT ANCHORS.
4. PREPARE SURFACE OF EQUIPMENT BASES, BASE PLATES, SOLE PLATES, AND SKIDS IN CONTACT WITH GROUT AS SPECIFIED IN SECTION 46_05_10.
5. PREPARE SURFACES OF CONCRETE FOUNDATION IN CONTACT WITH GROUT AS SPECIFIED IN SECTION 46_05_10.
6. PLACE NON-SHRINK EPOXY GROUT AS SPECIFIED IN SECTION 46_05_10.
7. AFTER GROUT SETS, TRIM GROUT TO 45 DEGREE CHAMFER.

S322 TYP — EQUIPMENT GROUTING WITH NON-SHRINK EPOXY GROUT

N 12/29/17

0

REV	DATE	BY	DESCRIPTION
			BID SET

DESIGNED CE
DRAWN CE
CHECKED MAK
DATE APRIL 2026

COLORADO REGISTERED PROFESSIONAL ENGINEER 34300 Digitally signed by Mark Alan Kiehne Date: 2026.04.08 09:48:14 -06'00'

CITY OF THORNTON - THORNTON WATER PROJECT
CHEMICAL BUILDING AND PRV VAULTS
STRUCTURAL
TYPICAL DETAILS 4

VERIFY SCALES
BAR IS ONE INCH ON ORIGINAL DRAWING
0 1"
IF NOT ONE INCH ON THIS SHEET, ADJUST SCALES ACCORDINGLY

JOB NO. 204403
DRAWING NO. 00TS04
SHEET NO. 137 OF 168

PROJECT NO. 204403-100000 FILE NAME: 20440300TS04.dgn

LAST SAVED BY: JBaumbarger Model: Layout1 ColorTable: gshade.ctb DesignScript: Carollo_Std_Pen_v0905.pen PlotScale: 1:1 Plot Date: 27-MAR-2026 8:19:14 AM User: svcPW

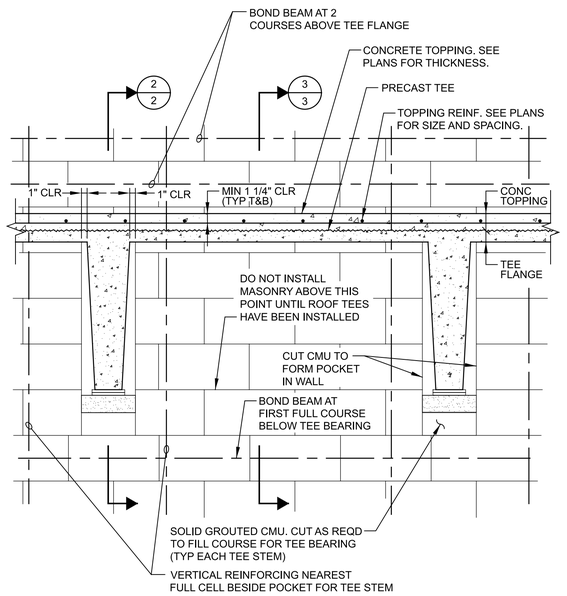

1 ELEVATION - INTERIOR FACE OF WALL

S340 TYP R — PRECAST CONCRETE TEE BEARING AT MASONRY WALL

SHEET 1 OF 3 12/29/17

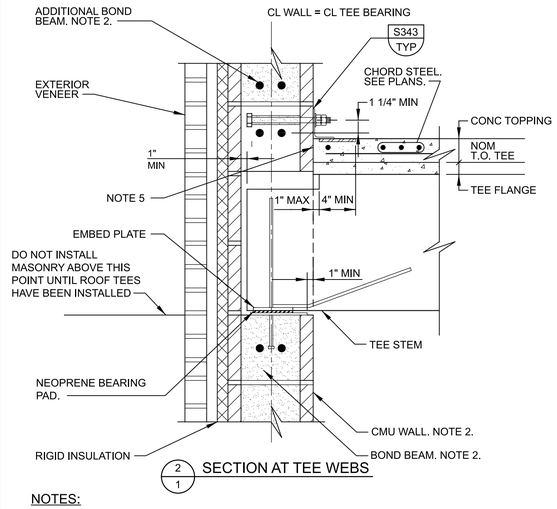

2 1 SECTION AT TEE WEBS

NOTES:

1. PROVIDE EMBED PLATE AND CONN ANGLE ABOVE EACH TEE WEB INDICATED ON DRAWINGS.
2. PROVIDE 2 BOND BEAMS ABOVE AND ONE BELOW TEES AND ELSEWHERE AS SHOWN ON DRAWINGS.
3. PRECAST CONNECTIONS BY MANUFACTURER.
4. INSTALL PRECAST DOUBLE TEES PRIOR TO INSTALLING CMU WALL ABOVE.
5. ISOLATE TOPPING SLAB FROM CMU WITH 10 MIL POLYETHYLENE PLASTIC SHEETING.

S340 TYP R — PRECAST CONCRETE TEE BEARING AT MASONRY WALL

SHEET 2 OF 3 01/22/26

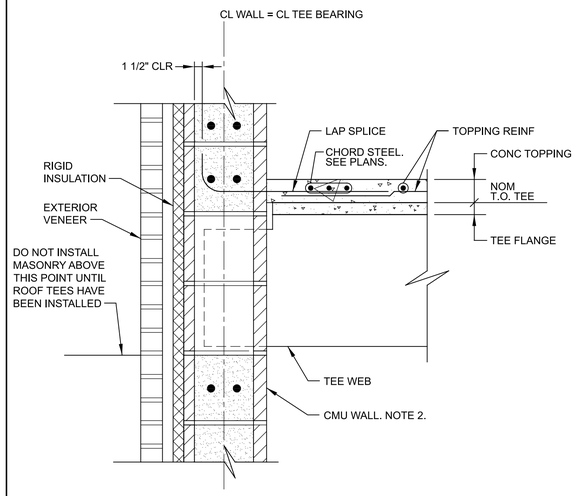

3 1 SECTION BETWEEN TEE WEBS

S340 TYP R — PRECAST CONCRETE TEE BEARING AT MASONRY WALL

SHEET 3 OF 3 04/15/22

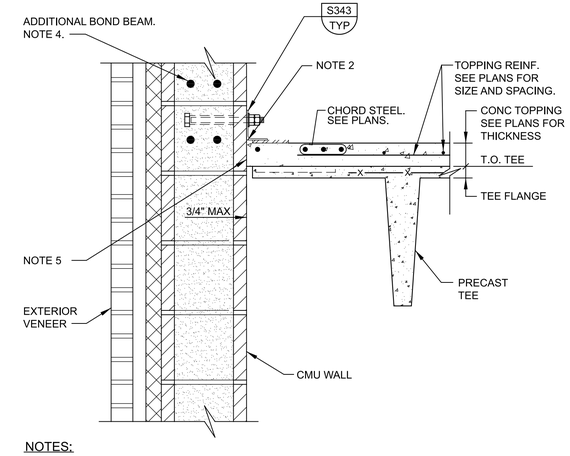

NOTES:

1. SPACE CONNECTIONS AT 4'-0" O.C. MAX UNLESS OTHERWISE NOTED ON ROOF PLAN. START CONNECTIONS 2'-0" MAX FROM END OF PRECAST TEE.
2. VERIFY VERTICAL LENGTH OF LONG SLOTTED HOLE REQUIRED FOR TEE DEFLECTION WITH PRECAST MANUFACTURER.
3. LOCATE BOLT SO THAT IT IS IN THE BOTTOM OF THE VERT SLOTTED HOLE IN STEEL ANGLE CONN AFTER TOPPING SLAB IS PLACED. VERIFY DEFLECTION OF TEE AFTER PLACEMENT OF TOPPING SLAB WITH PRECAST CONCRETE MANUFACTURER.
4. PROVIDE 2 BOND BEAMS WITH (2) #5 ABOVE TEES AND ELSEWHERE AS SHOWN ON THE DRAWINGS.
5. ISOLATE TOPPING SLAB FROM CMU WITH 10 MIL POLYETHYLENE PLASTIC SHEETING.

S342 TYP J — PRECAST CONCRETE TEE SIDE CONNECTION TO MASONRY WALL

01/22/26

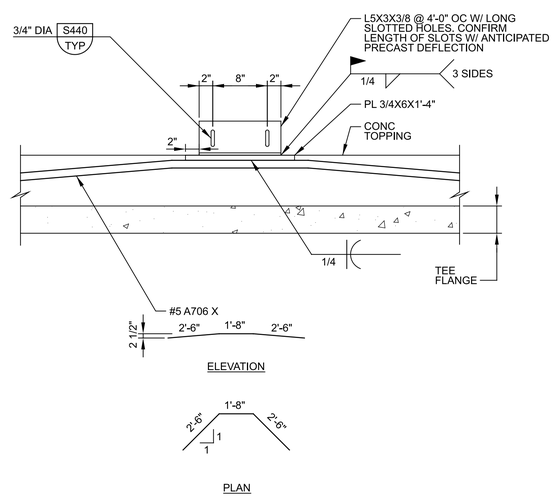

S343 TYP J — DIAPHRAGM CONNECTION AT PRECAST PANEL

01/22/26

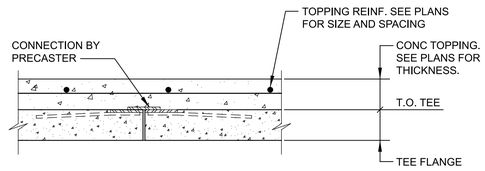

NOTES:

1. SPACE CONNECTIONS AS REQUIRED TO RESIST LOADING SHOWN ON ROOF LOADING PLANS. START CONNECTIONS 2'-0" MAX FROM END OF PRECAST TEE.

S344 TYP J — PRECAST CONCRETE TEE SIDE FLANGE CONNECTION

11/22/21

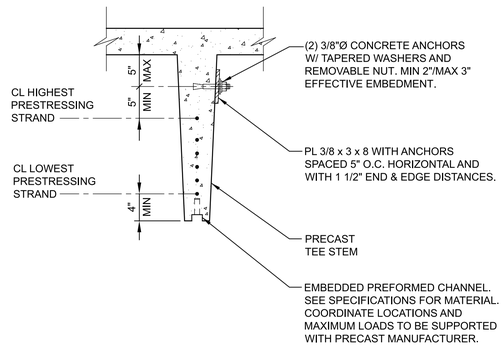

NOTES:

1. CONTRACTOR TO INDICATE TO PRECAST MANUFACTURER LOCATIONS FOR PLATES. NOTIFY ENGINEER OF LOCATIONS PRIOR TO PRECAST SUBMITTAL. ENGINEER WILL CONFIRM REQUIRED BOLT DIAMETER AND PLATE THICKNESS AT PLATE LOCATIONS.
2. THIS DETAIL CAN SUPPORT 50 LB MAXIMUM SERVICE LOAD.

S347 TYP R — PRECAST CONCRETE TEE AT EQUIPMENT SUPPORTS

04/15/22

0

REV	DATE	BY	DESCRIPTION
			BID SET

DESIGNED CE
DRAWN CE
CHECKED MAK
DATE APRIL 2026

COLORADO REGISTERED PROFESSIONAL ENGINEER 34300 Digitally signed by Mark Alan Kluever Date: 2026.03.05 11:01:12 -07'00' PROFESSIONAL ENGINEER

CITY OF THORNTON - THORNTON WATER PROJECT

CHEMICAL BUILDING AND PRV VAULTS

STRUCTURAL

TYPICAL DETAILS 5

VERIFY SCALES
BAR IS ONE INCH ON ORIGINAL DRAWING
0 1"
IF NOT ONE INCH ON THIS SHEET, ADJUST SCALES ACCORDINGLY

JOB NO. 204403
DRAWING NO. 00TS05
SHEET NO. 138 OF 168

PROJECT NO. 204403-100000 FILE NAME: 20440300TS05.dgn

LAST SAVED BY: JBaumbarger Model: Layout1 ColorTable: gshade.ctb DesignScript: Carollo_Std_Pen_v0905.pen PlotScale: 1:1 Plot Date: 27-MAR-2026 8:34:54 AM User: svcPW

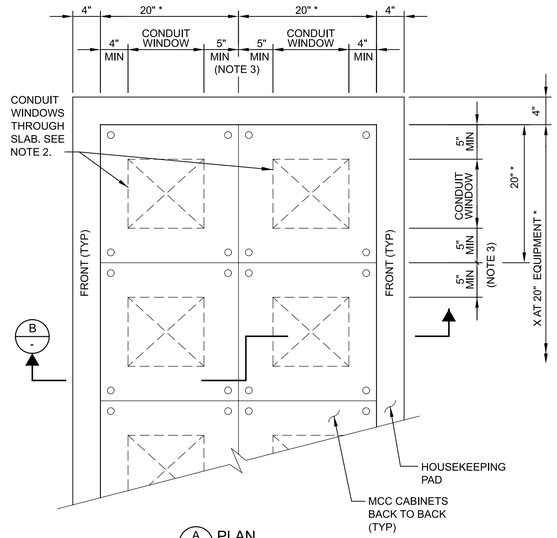

A - PLAN

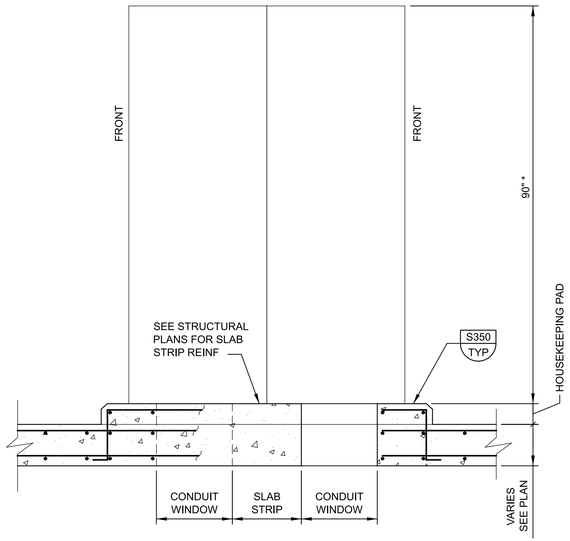

B - SECTION

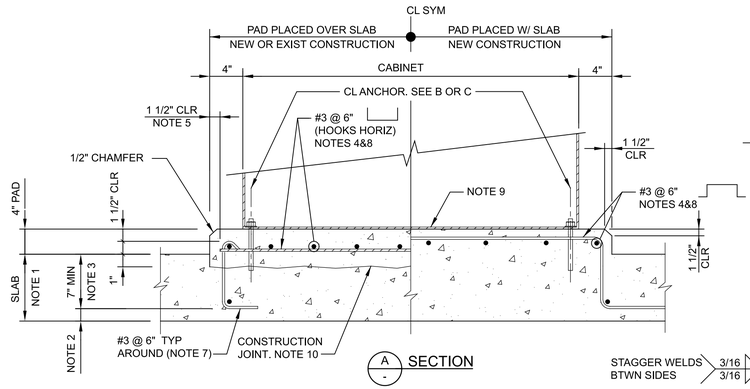

A - SECTION

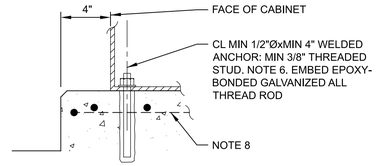

B - POST-INSTALLED ANCHOR

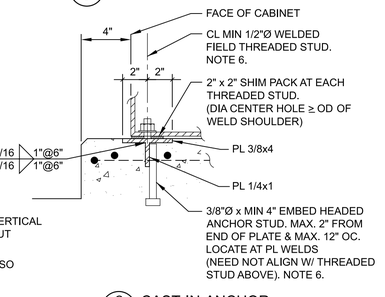

C - CAST-IN-ANCHOR

NOTES:

1. SEE STRUCTURAL DRAWINGS FOR THICKNESS OF SLAB BELOW PAD. SLAB REINFORCEMENT NOT SHOWN.
2. SEE S101/ TYP FOR MIN CONCRETE COVER REQUIREMENTS.
3. CONTACT ENGINEER FOR INSTRUCTIONS WHERE EMBEDMENT IS LESS THAN DIMENSION SHOWN.
4. FOR EQUIPMENT WITH CONDUIT WINDOWS BELOW, ADJUST BAR LOCATIONS TO FIT BETWEEN WINDOWS.
5. LOCATE VERTICAL EDGE OF PAD AND VERTICAL FACE OF PERIMETER HOOK BARS USING VERTICAL 2x FORM DURING SLAB PLACEMENT.
6. HOT DIP GALVANIZE PLATE AND HEADED ANCHOR STUD ASSEMBLY. TOUCH UP GALVANIZING AFTER FIELD WELDING THREADED STUDS.
7. FOR NEW PAD ON EXIST SLAB, PROVIDE DOWELS WITH VERTICAL LEG SET IN ADHESIVE USING DETAIL S194/TYP. DO NOT CUT EXISTING SLAB REINF.
8. POST-INSTALLED ANCHORS: POSITION REINFORCEMENT SO THAT IT WILL NOT BE CUT DURING ANCHOR PLACEMENT.
9. SEE DRAWINGS FOR REQUIRED PENETRATION DETAILS.
10. ROUGHEN CONCRETE TO ICRI CSP-7. SATURATE BONDING SURFACES AND CONCRETE 12" BEYOND FOR MINIMUM 24 HOURS. REMOVE WATER AND PREPARE CONCRETE TO "SATURATED SURFACE DRY" (SSD) CONDITION. PLACE PAD AND WATER CURE MINIMUM 7 DAYS.

S350 TYP — CONCRETE - EQUIPMENT - ELECTRICAL - HOUSEKEEPING PAD AT ELECTRICAL CABINETS

12/18/2023

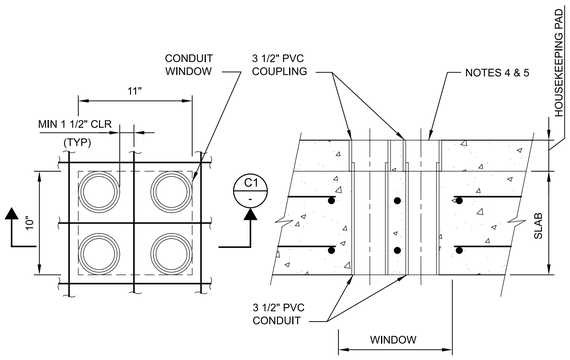

PLAN SECTION C1

C - DETAIL - SLEEVES CAST-IN-PLACE ALL SEISMIC DESIGN CATEGORIES

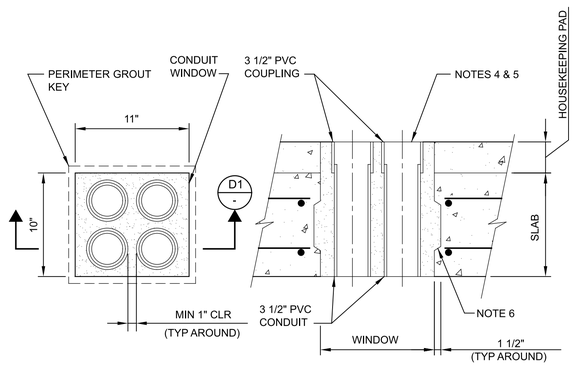

PLAN SECTION D1

D - DETAIL - SLEEVES GROUTED-IN-PLACE OPTION FOR SEISMIC DESIGN CATEGORIES A & B

NOTES:

1. * INDICATES TYPICAL DIMENSION. CONFIRM DIMENSIONS FOR EQUIPMENT SELECTED.
2. LIMITS OF WINDOW SHOWN BY DASHED LINES. WINDOW DEFINES AREA WHERE ELECTRICAL CONDUITS MAY PENETRATE STRUCTURE.
3. MINIMUM 10" WIDE CONCRETE SLAB STRIP BETWEEN CONDUIT WINDOWS.
4. FILL USED SLEEVES WITH DUXSEAL AFTER CABLE INSTALLATION.
5. PLUG OR CAP SPARE SLEEVES.
6. GROUT KEY HEIGHT = 1/3 X SLAB THICKNESS.

S354 TYP S — ELECTRICAL EQUIPMENT: HOUSEKEEPING PAD AND FLOOR PENETRATION AT MCC'S - LOW VOLTAGE ON ELEVATED SLAB

02/21/14

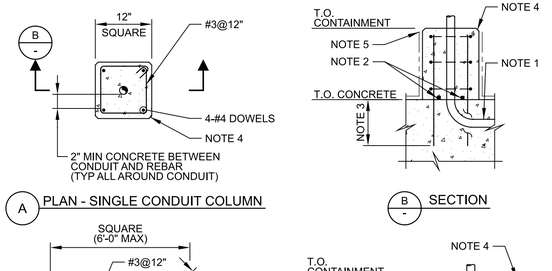

A - PLAN - SINGLE CONDUIT COLUMN

B - SECTION

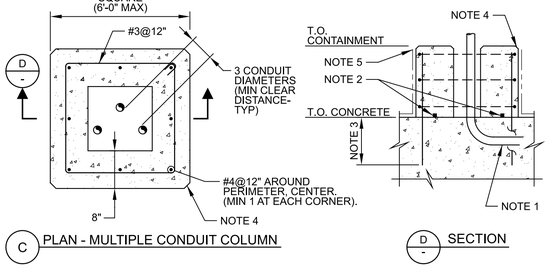

C - PLAN - MULTIPLE CONDUIT COLUMN

D - SECTION

NOTES:

1. SEE DETAILS EM115/TYP, EM116/TYP AND EM117/TYP FOR CONDUITS IN SLABS.
2. LOW EXPANSION HYDROPHILIC WATER STOP. TYPICAL AROUND. PROVIDE MINIMUM 3" CONCRETE COVER.
3. LAP SPLICE LENGTH AT DOWELS. IF LAP LENGTH NOT AVAILABLE, PROVIDE 90 DEGREE STANDARD HOOK 3" CLEAR ABOVE BOTTOM OF SLAB.
4. TYPICAL CORNER CHAMFER AT VERTICAL AND TOP EDGES.
5. COATING WHERE INDICATED ON THE DRAWINGS.

S380 TYP S — ELECTRICAL EQUIPMENT: CONDUIT PROTECTION IN LIQUID CONTAINMENT AREA

12/29/17

1. UNLESS OTHERWISE INDICATED ON THE DRAWINGS, MINIMUM WALL REINFORCEMENT SHALL BE AS FOLLOWS:

   A. VERTICAL REINFORCEMENT:
   #5 AT 2'-8" IN GROUTED CELLS. CENTERED IN 8" WALLS. EACH FACE IN 12" WALLS.
   ADDITIONAL REINFORCEMENT (SAME SIZE AS VERTICAL WALL BARS UNO):
   VERTICAL BARS AT CORNERS AND INTERSECTIONS: SEE DETAIL S412/TYP.
   VERTICAL BARS EACH SIDE AT MASONRY CONTROL JOINTS: SEE DETAIL S430/TYP.
   VERTICAL BARS IN FIRST 2 CELLS AT EACH JAMB OF WALL OPENINGS: SEE DETAIL S412/TYP.

   B. HORIZONTAL REINFORCEMENT:
   3/16" DIA LADDER JOINT REINFORCEMENT AT 16" OC VERTICAL. SEE DETAIL S414/TYP.
   HORIZONTAL BOND BEAMS AT LOCATIONS INDICATED IN DETAIL S410/TYP AND IN WALL SECTIONS FOR EACH STRUCTURE.
   BOND BEAM REINFORCEMENT: 1 - #5 IN 8" WALLS. 2 - #5 IN 12" WALLS.

2. LAP SPLICES:

   A. UNLESS OTHERWISE INDICATED ON THE DRAWINGS, THE BARS AT A LAP SPLICE SHALL BE IN CONTACT WITH EACH OTHER.

   B. BAR LAP SPLICES NOT SPECIFIED ON THE DRAWINGS OR IN THE FOLLOWING TABLE SHALL NOT BE LESS THAN 72 BAR DIAMETERS.

   C. THE MASONRY SIDE COVER OVER THE REINFORCING BARS SHALL NOT BE LESS THAN 2 INCHES FROM FACE OF MASONRY TO THE EXTERIOR FACE OF THE BAR.

REINFORCING BAR LAP SPLICES: f'm = 1500 psi, Fy = 60,000 psi				
BAR SIZE	LAP SPLICE LENGTH (INCHES)			
	8" CMU: BAR CENTERED IN WALL	8" CMU: BAR @ FACE OF WALL	12" CMU: BAR CENTERED IN WALL	12" CMU: BAR @ FACE OF WALL
#4	21"	26"	21"	26"
#5	26"	40"	26"	40"
#6	42"	54"	40"	54"
#7	58"	63"	46"	63"

S400 TYP S — MASONRY NOTES

04/10/17

0

REV	DATE	BY	DESCRIPTION
			BID SET

DESIGNED CE
DRAWN CE
CHECKED MAK
DATE APRIL 2026

COLORADO REGISTERED — MARK ALAN KRAUSE — 34300 — digitally signed by Mark Alan Krause — Date: 2026.04.15 11:00:43 -06'00' — PROFESSIONAL ENGINEER

CITY OF THORNTON - THORNTON WATER PROJECT

CHEMICAL BUILDING AND PRV VAULTS

STRUCTURAL

TYPICAL DETAILS 6

VERIFY SCALES
BAR IS ONE INCH ON ORIGINAL DRAWING
0 1"
IF NOT ONE INCH ON THIS SHEET, ADJUST SCALES ACCORDINGLY

JOB NO. 204403
DRAWING NO. 00TS06
SHEET NO. 139 OF 168

PROJECT NO. 204403-100000 FILE NAME: 20440300TS06.dgn

Plot Date: 27-MAR-2026 8:19:14 AM
User: svcPW
PlotScale: 1:1
DesignScript: Carollo_Std_Pen_v0905.pen
ColorTable: gshade.ctb
Model: Layout1
LAST SAVED BY: JBaumbarger

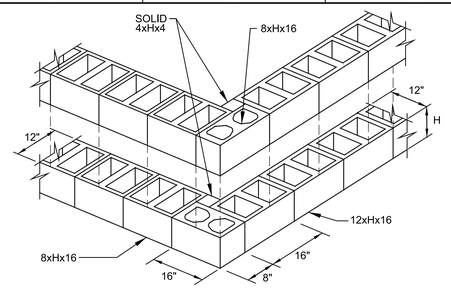

12" WALL TO 12" WALL: ALTERNATE COURSES

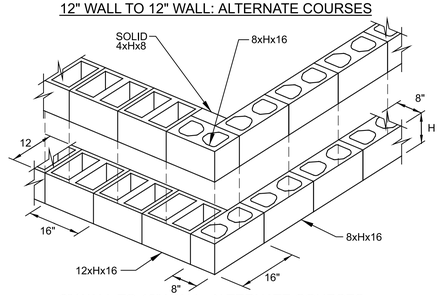

8" WALL TO 12" WALL: ALTERNATE COURSES

NOTES:
1. WALL THICKNESS AS INDICATED ON THE DRAWINGS.
2. BLOCK OR COURSE HEIGHT "H" EQUALS 8" OR 4" AS INDICATED ON THE DRAWINGS.

S402 TYP — CMU CORNER DETAILS - 12" WALLS

N — 07/21/16

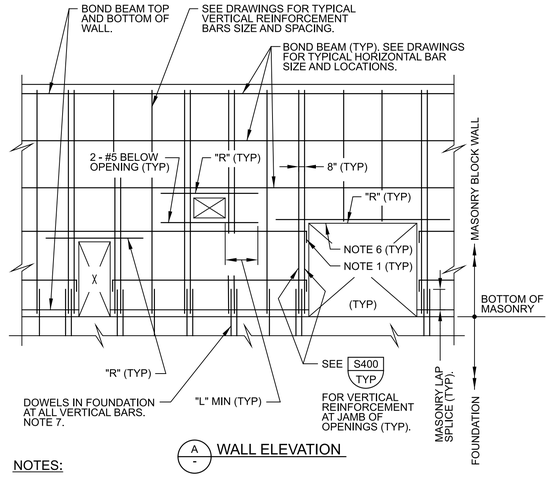

A - WALL ELEVATION

NOTES:
1. ACI STANDARD 90° HOOK ON HORIZONTAL BARS AT OPENINGS.
2. SEE DRAWINGS FOR VERTICAL AND HORIZONTAL REINFORCEMENT SIZE AND SPACING AT EACH STRUCTURE.
3. DO NOT PLACE VERTICAL CONDUITS IN CELLS WITH VERTICAL REINFORCING BARS.
4. SEE DETAIL S412/TYP FOR BOND BEAM REINFORCEMENT AT CORNERS AND INTERSECTIONS.
5. "R" BARS: EXTEND BAR TO "L" DIMENSION INDICATED ON SHEET 2. PROVIDE VERTICAL HOOK AT END IF "L" CANNOT BE ACHIEVED.
6. CHANNEL LINTEL MASONRY UNITS ACROSS OPENINGS. KNOCK-OUT BOND BEAM UNITS BEYOND OPENINGS TO "L."
7. EMBED DOWELS IN CONCRETE PER DETAIL S455/TYP.

S410 TYP — REINFORCED MASONRY WALL

S — SHEET 1 OF 2 — 06/01/17

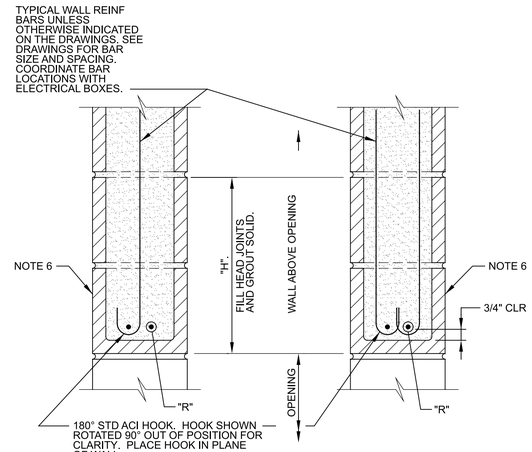

B - LINTEL AT OPENING WITH VERTICAL REINF

C - LINTEL AT OPENING WITH VERTICAL REINF EACH FACE

LINTEL REINFORCEMENT SCHEDULE			
"W"	"R"	"L"	"H"
LESS THAN 5'-0"	2 - #5	2'-6"	16"
GREATER THAN 5'-0" TO 7'-0"	2 - #6	3'-0"	32"
GREATER THAN 7'-0" TO 12'-0"	2 - #7	3'-6"	40"

S410 TYP — REINFORCED MASONRY WALL

S — SHEET 2 OF 2 — 06/01/17

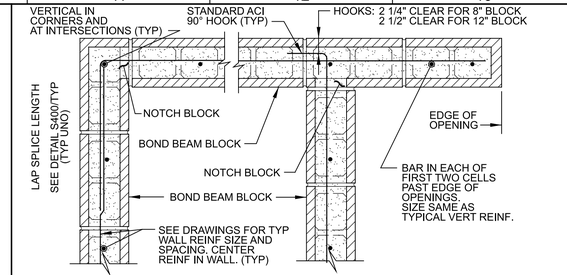

A - SINGLE BAR BOND BEAM

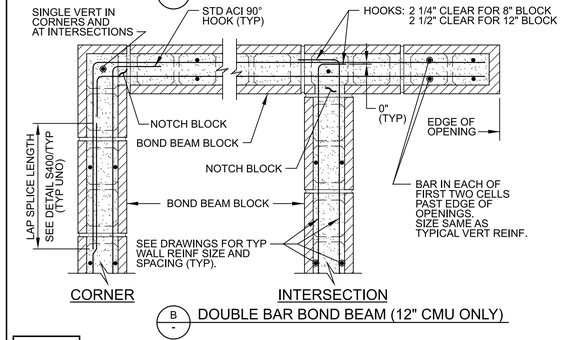

B - DOUBLE BAR BOND BEAM (12" CMU ONLY)

S412 TYP — MASONRY BOND BEAM REINFORCING

S — 04/10/17

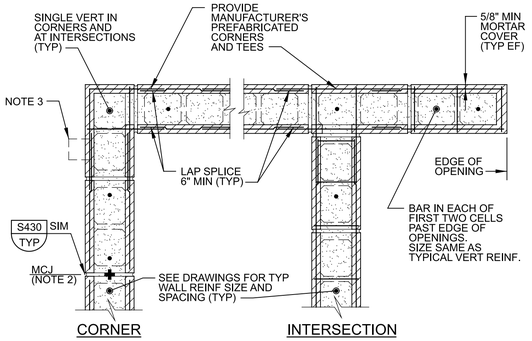

NOTES:
1. PROVIDE HORIZONTAL JOINT REINFORCEMENT AT MAXIMUM 1'-4" OC VERTICAL.
2. DISCONTINUE WIRE REINFORCEMENT ACROSS MASONRY CONTROL JOINTS. PROVIDE MINIMUM 5/8" MORTAR COVER AT CUT ENDS.
3. AT VENEER, PROVIDE TABS AND VENEER TIES PER SPECIFICATIONS.

S414 TYP — MASONRY JOINT REINFORCEMENT

S — 04/11/17

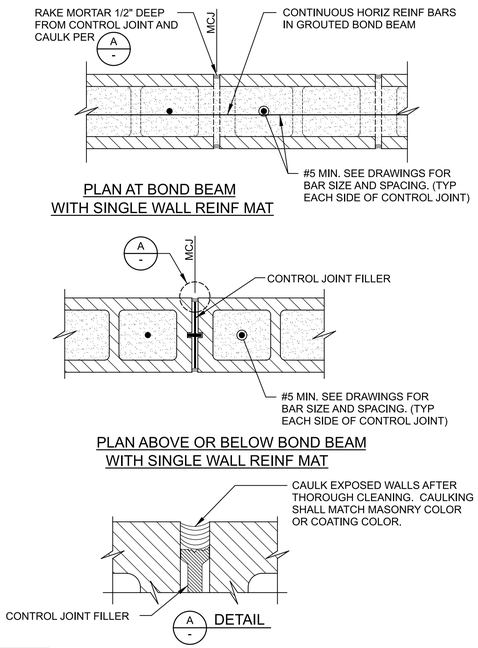

PLAN AT BOND BEAM WITH SINGLE WALL REINF MAT

PLAN ABOVE OR BELOW BOND BEAM WITH SINGLE WALL REINF MAT

S430 TYP — MASONRY CONTROL JOINT

S — SHEET 1 OF 2 — 04/04/17

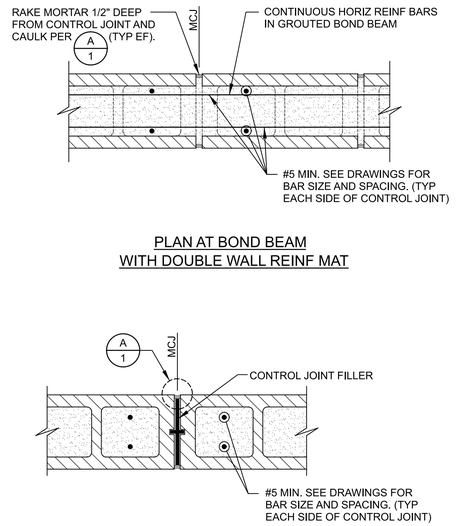

PLAN AT BOND BEAM WITH DOUBLE WALL REINF MAT

PLAN ABOVE OR BELOW BOND BEAM WITH DOUBLE WALL REINF MAT

S430 TYP — MASONRY CONTROL JOINT

S — SHEET 2 OF 2 — 04/04/17

0

REV	DATE	BY	DESCRIPTION
			BID SET

DESIGNED CE
DRAWN CE
CHECKED MAK
DATE APRIL 2026

COLORADO REGISTERED PROFESSIONAL ENGINEER — 34300 — Digitally signed by Mark Alan Kluever — Date: 2026.03.26 11:00:32 -06'00'

carollo®

THORNTON WATER PROJECT

CITY OF THORNTON - THORNTON WATER PROJECT
CHEMICAL BUILDING AND PRV VAULTS
STRUCTURAL
TYPICAL DETAILS 7

VERIFY SCALES
BAR IS ONE INCH ON ORIGINAL DRAWING
0 1"
IF NOT ONE INCH ON THIS SHEET, ADJUST SCALES ACCORDINGLY

JOB NO. 204403
DRAWING NO. 00TS07
SHEET NO. 140 OF 168

PROJECT NO. 204403-100000 FILE NAME: 20440300TS07.dgn

LAST SAVED BY: JBaumbarger Model: Layout1 ColorTable: gshade.ctb DesignScript: Carollo_Std_Pen_v0905.pen PlotScale: 1:1 Plot Date: 27-MAR-2026 8:19:38 AM User: svcPW

Plot Date: 27-MAR-2026 8:19:38 AM
User: svcPW
Model: Layout1 ColorTable: gshade.ctb DesignScript: Carollo_Std_Pen_v0905.pen PlotScale: 1:1
LAST SAVED BY: JBaumbarger

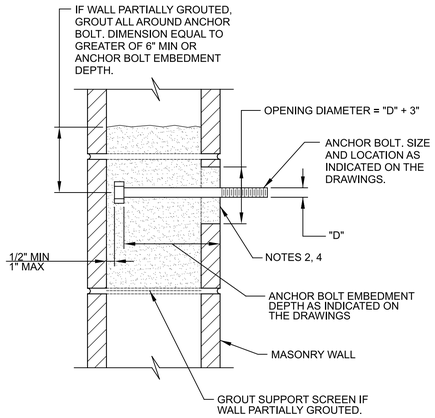

NOTES:

1. "D" = DIAMETER OF ANCHOR BOLT.
2. SET ANCHOR BOLTS WITH TEMPLATE. DO NOT EMBED ADJUSTMENT NUTS IN GROUT AT FACE OF MASONRY.
3. CUT MASONRY WEBS AS REQUIRED TO ALLOW MINIMUM 1/2" GROUT BETWEEN ANCHOR BOLT AND MASONRY SURFACE.
4. REMOVE EXCESS GROUT. LEAVE FINISHED SURFACE FLUSH WITH FACE OF WALL.

S440 TYP S — ANCHOR BOLTS IN MASONRY — 04/04/17

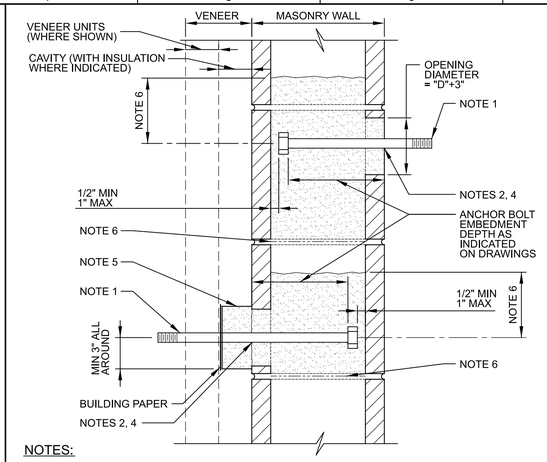

NOTES:

1. "D" = DIAMETER OF ANCHOR BOLT. SEE DRAWINGS FOR SIZE AND LOCATION.
2. SET ANCHOR BOLTS WITH TEMPLATE. DO NOT EMBED ADJUSTMENT NUTS IN GROUT AT FACE OF MASONRY.
3. CUT MASONRY WEBS AS REQUIRED TO ALLOW MINIMUM 1/2" GROUT BETWEEN ANCHOR BOLT AND MASONRY SURFACE.
4. REMOVE EXCESS GROUT. LEAVE FINISHED SURFACE FLUSH WITH FACE OF WALL.
5. AT OUTSIDE FACE WITH VENEER, PROVIDE MINIMUM 6"x6" (OR 6"Ø) GROUT PAD BETWEEN VENEER AND MASONRY WALL. COVER VENEER SIDE WITH MINIMUM 2 LAYERS 30# BUILDING PAPER TO BREAK BOND WITH VENEER UNITS. FILL SPACE BETWEEN PAPER AND VENEER WITH MORTAR TO PROVIDE FIRM BEARING.
6. FOR PARTIALLY GROUTED WALLS: MINIMUM GROUT ALL AROUND ANCHOR BOLT EQUAL TO 1.5 TIMES ANCHOR BOLT EMBEDMENT (6" MINIMUM). PROVIDE GROUT SUPPORT SCREEN BELOW GROUT.

S441 TYP S — ANCHOR BOLTS IN MASONRY WITH VENEER — 04/11/17

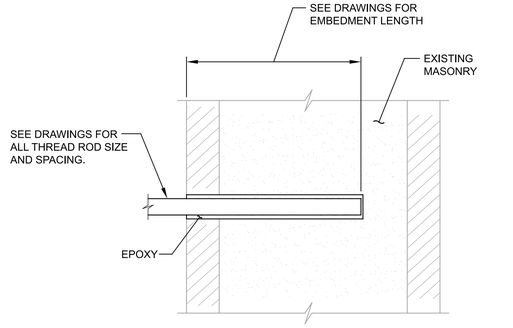

NOTE:

1. INSTALLATION OF AND ALL THREAD RODS AS INDICATED IN THE SPECIFICATIONS.

S442 TYP N — EPOXY BONDED ALL THREAD RODS IN MASONRY — 08/18/15

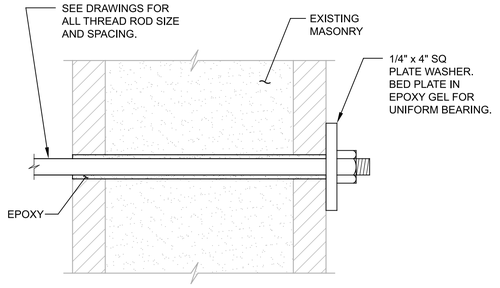

NOTE:

1. INSTALLATION OF AND ALL THREAD RODS AS INDICATED IN THE SPECIFICATIONS.

S444 TYP N — EPOXY BONDED "THROUGH BOLT" ALL THREAD RODS IN MASONRY — 08/18/15

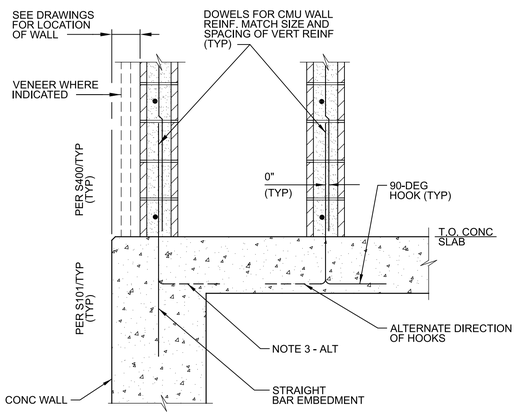

A - SECTION: 8" CMU

NOTES:

1. FOR CMU WALL REINFORCING SIZE AND SPACING, SEE PLANS.
2. VENEER IS NOT SHOWN FOR CLARITY.
3. WHERE STRAIGHT BAR EMBEDMENT IS NOT AVAILABLE, PROVIDE 90-DEGREE HOOKS. ROTATE HOOKS TO PROVIDE REQUIRED CONCRETE COVER.

S455 TYP — CMU WALL TO CONCRETE — SHEET 1 OF 2 — 01/09/18

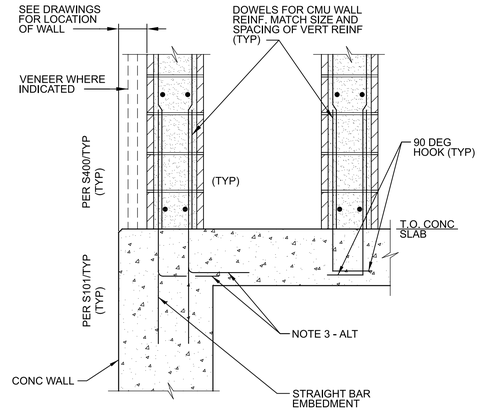

B - SECTION: 12" CMU

S455 TYP — CMU WALL TO CONCRETE — SHEET 2 OF 2 — 01/09/18

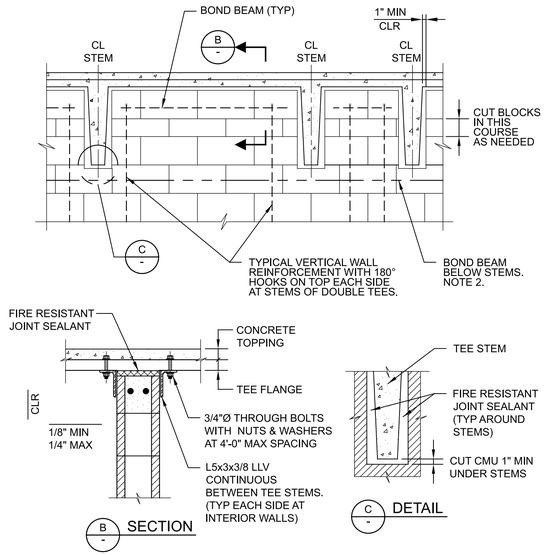

B - SECTION

C - DETAIL

NOTES:

1. SEE DETAIL S410/TYP AND DRAWINGS FOR TYPICAL MASONRY WALL REINFORCEMENT.
2. MINIMUM BOND BEAM HEIGHT = 6". DROP BOND BEAM TO FIRST FULL HEIGHT COURSE BELOW NOTCHES AT STEMS IF REQUIRED.

S458 TYP J — CMU WALL : TOP OF WALL LATERAL SUPPORT BELOW PRECAST CONCRETE TEES — 02/03/17

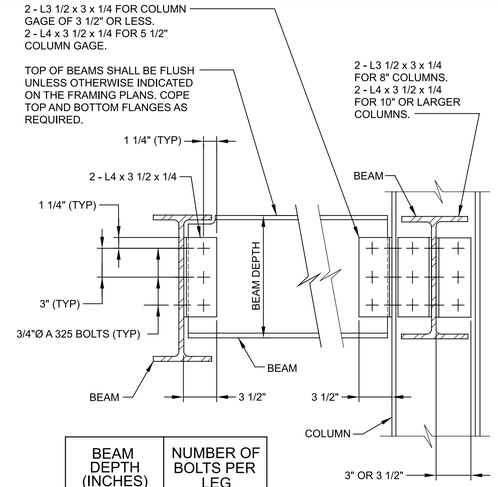

BEAM DEPTH (INCHES)	NUMBER OF BOLTS PER LEG
8 - 10	2
12 - 16	3
18 - 21	4
24 - 30	6

NOTE:

1. SCHEDULE APPLIES TO ALL BEAMS UNLESS NUMBER OF BOLTS PER LEG IS OTHERWISE INDICATED ON THE FRAMING PLAN BY ⬡.

S502 TYP — STEEL DOUBLE ANGLE BOLTED CONNECTION VERTICAL BOLT LINES — 4/30/07

0

REV	DATE	BY	DESCRIPTION
			BID SET

DESIGNED CE
DRAWN CE
CHECKED MAK
DATE APRIL 2026

COLORADO REGISTERED PROFESSIONAL ENGINEER — 34300 — Digitally signed by Mark Alan Kluever — Date: 2026.03.27 08:05:11 -06'00'

CITY OF THORNTON - THORNTON WATER PROJECT
CHEMICAL BUILDING AND PRV VAULTS
STRUCTURAL
TYPICAL DETAILS 8

VERIFY SCALES
BAR IS ONE INCH ON ORIGINAL DRAWING
0 1"
IF NOT ONE INCH ON THIS SHEET, ADJUST SCALES ACCORDINGLY

JOB NO. 204403
DRAWING NO. 00TS08
SHEET NO. 141 OF 168

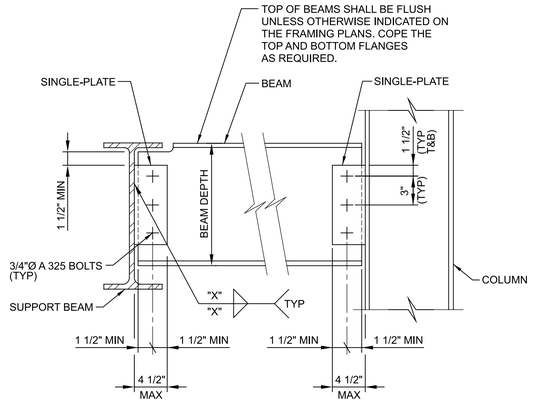

BEAM DEPTH (INCHES)	NUMBER OF BOLTS PER PLATE	PLATE THICKNESS (INCHES)	FILLET WELD SIZE "X" (INCHES)
8-10	2	1/4	3/16
12-16	3	1/4	3/16
18-21	5	3/8	5/16
24-30	7	3/8	5/16

NOTE:

1. SCHEDULE APPLIES TO ALL BEAMS UNLESS NUMBER OF BOLTS PER LEG IS OTHERWISE INDICATED ON THE FRAMING PLAN BY (#) WHERE NUMBER INSIDE SYMBOL = NUMBER OF BOLTS.

S506 TYP — STEEL SINGLE PLATE SHEAR CONNECTION
3/4" DIA BOLTS; ASTM A36 PLATES

N 03/27/19

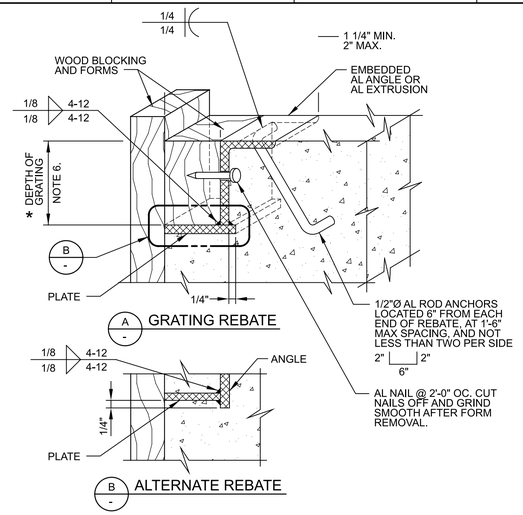

NOTES:

1. SEE SPECIFICATIONS FOR ALUMINUM GRATING.
2. MAKE REBATE AND/OR SEAT CONTINUOUS AROUND OPENING.
3. EMBEDDED REBATE ANGLE AND PLATE SHALL BE 1/4" MINIMUM THICKNESS.
4. REBATE MAY BE EXTRUDED, SUBJECT TO ENGINEER'S ACCEPTANCE.
5. COAT ALUMINUM SURFACES IN CONTACT WITH CONCRETE AS SPECIFIED.
6. * = DIMENSION AS REQUIRED BY GRATING MANUFACTURER. SEE SPECIFICATIONS.

S542 TYP — GRATING - REBATE AND SEAT
ALUMINUM

NS SHEET 1 OF 2 06/21/19

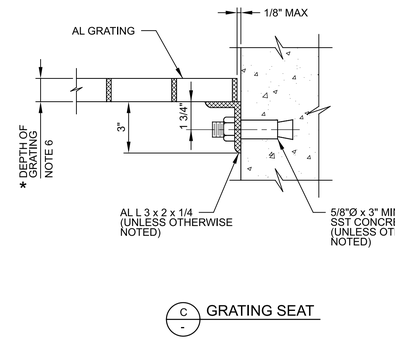

S542 TYP — GRATING - REBATE AND SEAT
ALUMINUM

NS SHEET 2 OF 2 06/21/19

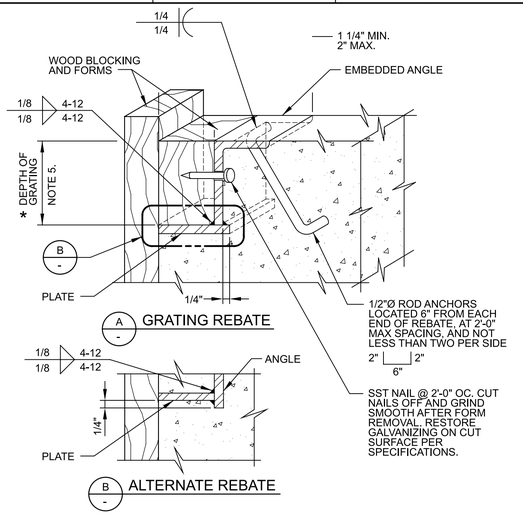

NOTES:

1. SEE SPECIFICATIONS FOR SST GRATING.
2. MAKE REBATE AND/OR SEAT CONTINUOUS AROUND OPENING.
3. EMBEDDED REBATE ANGLE AND PLATE SHALL BE 1/4" MINIMUM THICKNESS.
4. * = DIMENSION AS REQUIRED BY GRATING MANUFACTURER. SEE SPECIFICATIONS.

S544 TYP — GRATING - REBATE AND SEAT
SST

R SHEET 1 OF 2 11/19/25

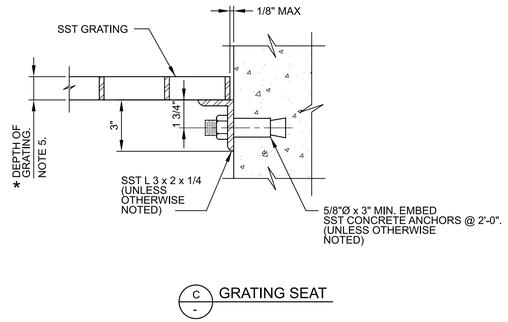

S544 TYP — GRATING - REBATE AND SEAT
SST

R SHEET 2 OF 2 11/19/25

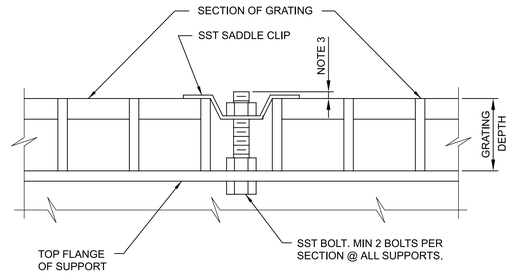

NOTES:

1. GRATING FASTENERS SHALL BE INSTALLED WHERE INDICATED ON THE DRAWINGS.
2. GRATING FASTENERS SHALL BE INSTALLED AT EACH CORNER OF EACH PANEL AND AT SPACING NOT TO EXCEED 8'-0".
3. RECESS THE GRATING CLIP WITHIN THE DEPTH OF THE GRATING TO AVOID A TRIPPING HAZARD.

S559 TYP — GRATING - FASTENERS
(ALL MATERIALS)

03/16/21

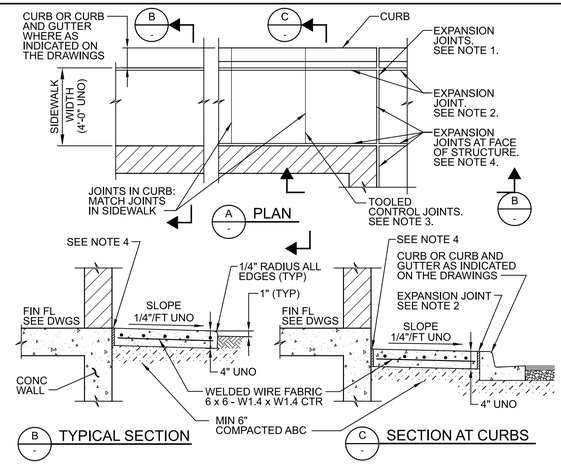

NOTES:

1. EXPANSION JOINTS AT ENDS OF CONCRETE PLACEMENT, AT POINTS OF CURVATURE, AT BOTH SIDES OF DRIVEWAYS, AT INTERSECTIONS, AT CORNERS OF STRUCTURES, AND AT MAXIMUM SPACING OF 30 FEET. EXPANSION JOINTS SHALL BE 3/4" WIDE BITUMINOUS FIBER WITH 1/4" RADIUS CONCRETE EDGES AT EACH SIDE.
2. EXPANSION JOINT AT CURB. JOINT SHALL BE 3/8" WIDE BITUMINOUS FIBER WITH 1/4" RADIUS CONCRETE EDGE AT SIDEWALK.
3. WEAKENED PLANE JOINTS AT UNIFORM SPACING EQUAL TO 1.0 TO 1.25 TIMES SIDEWALK WIDTH, BUT NOT GREATER THAN 10 FEET OC MAXIMUM. PROVIDE 1/4" RADIUS CONCRETE EDGE EACH SIDE AT JOINTS. PROVIDE 1 INCH DEEP TOOLED JOINT.
4. EXPANSION JOINT AT FACE OF STRUCTURE. CONTINUE JOINTS THROUGH ADJACENT SIDEWALKS. JOINTS SHALL BE 3/8" WIDE BITUMINOUS FIBER.
5. TOP OF CONCRETE ELEVATIONS: AS INDICATED ON THE DRAWINGS.

S901 TYP — SIDEWALK - AT STRUCTURES

J 11/30/21

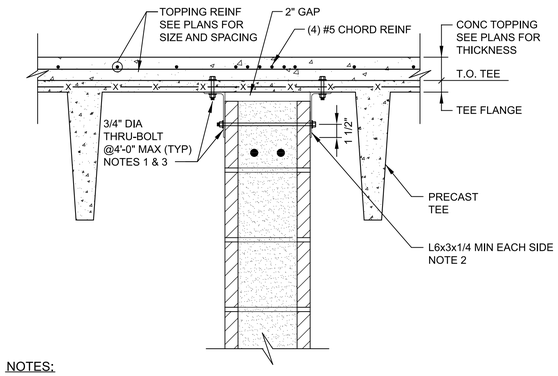

NOTES:

1. START CONNECTIONS 2'-0" MAX FROM END OF PRECAST DOUBLE TEE.
2. VERIFY VERTICAL LENGTH OF LONG SLOTTED HOLE REQUIRED FOR DOUBLE TEE DEFLECTION WITH PRECAST MANUFACTURER.
3. LOCATE BOLT SO THAT IT IS IN THE CENTER OF THE VERT SLOTTED HOLE IN STEEL ANGLE CONN AFTER TOPPING SLAB IS PLACED. VERIFY DEFLECTION OF DOUBLE TEE AFTER PLACEMENT OF TOPPING SLAB WITH PRECAST CONCRETE MANUFACTURER.
4. PROVIDE BOND BEAM BELOW DOUBLE TEES AND ELSEWHERE AS SHOWN ON THE DRAWINGS.

S935 TYP — MASONRY SHEAR WALL TO PRECAST DOUBLE TEES

R 04/18/22 0

REV	DATE	BY	DESCRIPTION
			BID SET

DESIGNED CE
DRAWN CE
CHECKED MAK
DATE APRIL 2026

COLORADO REGISTERED PROFESSIONAL ENGINEER 34300 Digitally signed by Mark Alan Gilliland Date: 2026.03.27 12:54:12 -06'00'

carollo®

THORNTON WATER PROJECT

CITY OF THORNTON - THORNTON WATER PROJECT
CHEMICAL BUILDING AND PRV VAULTS
STRUCTURAL
TYPICAL DETAILS 9

VERIFY SCALES
BAR IS ONE INCH ON ORIGINAL DRAWING
0 1"
IF NOT ONE INCH ON THIS SHEET, ADJUST SCALES ACCORDINGLY

JOB NO. 204403
DRAWING NO. 00TS09
SHEET NO. 142 OF 168

PROJECT NO. 204403-100000 FILE NAME: 20440300TS09.dgn

LAST SAVED BY: JBaumbarger Model: Layout1 ColorTable: gshade.ctb DesignScript: Carollo_Std_Pen_v0905.pen PlotScale: 1:1 Plot Date: 27-MAR-2026 8:20:23 AM User: svcPW

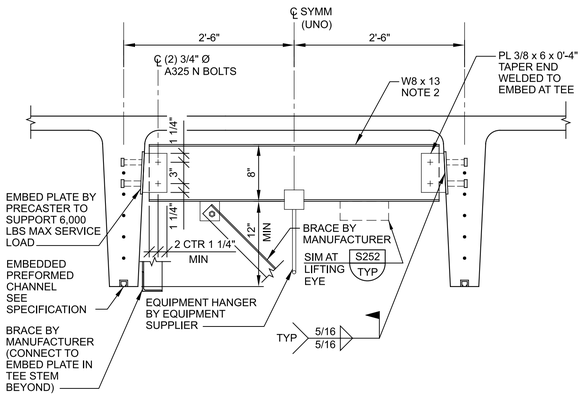

NOTES:

1. BEAM AND CONNECTORS GALVANIZED STEEL CONSTRUCTION, UNLESS OTHERWISE NOTED.
2. PROVIDE LONG SLOTTED HOLES FOR BOLTS AT ONE END W8.

S938 TYP J — EQUIPMENT SUPPORT BEAM AT PRECAST CONCRETE TEE

04/18/22

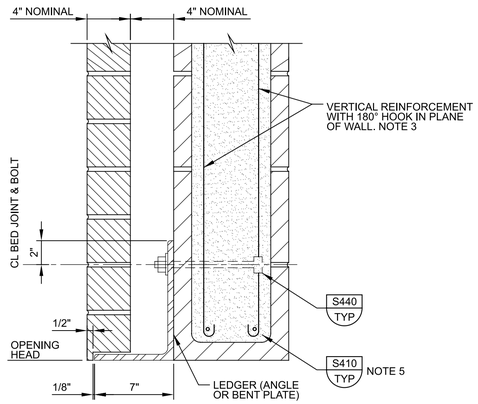

LEDGER & ANCHOR BOLTS		
OPENING WIDTH	LEDGER THICKNESS	BOLT DIAMETER & SPACING
TO 6'-8	3/8"	3/4"Ø @16"
> 6'-8" TO 16'	1/2"	1"Ø @16"
NOTE 4	3/4"	1"Ø @16"

NOTES:

1. PROVIDE HOT DIP GALVANIZED LEDGER, ANCHOR BOLTS, & HARDWARE.
2. LEDGER EXTENDS ACROSS CLEAR WIDTH MINUS 1" AT OPENINGS. (DO NOT EXTEND LEDGER PAST OPENING.)
3. PROVIDE VERTICAL REINFORCEMENT WITH HOOK AT ANCHOR BOLTS.
4. FOR LOCATIONS WITH LEDGER ANGLE SUPPORTING UP TO 20 FEET OF VENEER AND NOT AT OPENINGS, MAKE LEDGER ANGLE CONTINUOUS ALONG WALL. PROVIDE BOND BEAM AT LEDGER ANGLE ELEVATION EVEN IF OPENING DOESN'T EXIST.
5. BEYOND OPENING, CONTINUE BOND BEAM PER DETAIL S410/TYP AT LINTEL ELEVATION.

S947 TYP J — VENEER LEDGER AT MASONRY STRUCTURE

11/29/21

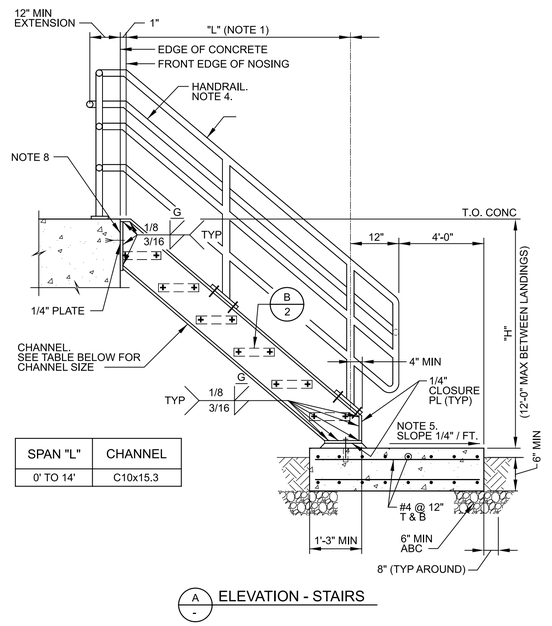

SPAN "L"	CHANNEL
0' TO 14'	C10x15.3

A - ELEVATION - STAIRS

AC111 TYP NS,R — STAIRS - THREE RAIL

SHEET 1 OF 3 — 03/27/26

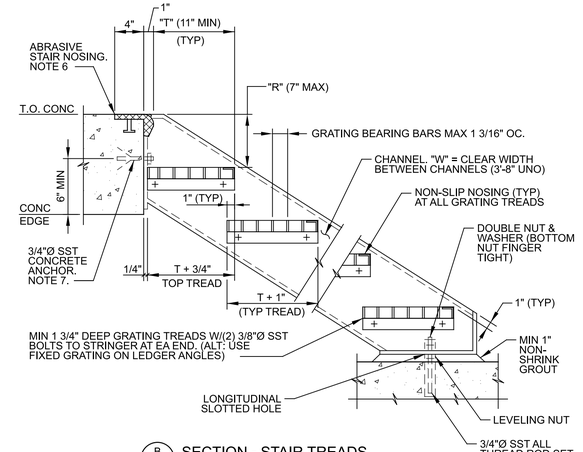

B 1 SECTION - STAIR TREADS

AC111 TYP NS — STAIRS - ALUMINUM - THREE RAIL

SHEET 2 OF 3 — 06/10/22

NOTES:

1. SEE DRAWINGS FOR DIMENSIONS "H", "L", "R", "T" AND "W".
2. SEE DETAIL AC500/TYP FOR ALUMINUM GUARDRAIL NOTES AND DETAIL AC504/TYP FOR ALUMINUM GUARDRAIL DETAILS.
3. COAT ALUMINUM SURFACES IN CONTACT WITH CONCRETE, AND INSTALL ISOLATION SLEEVES AND WASHERS BETWEEN DISSIMILAR METALS AS SPECIFIED.
4. PROVIDE HANDRAIL EXTENSIONS AS SHOWN AT BOTH SIDES OF STAIR, UNLESS HANDRAIL IS CONTINUOUS (AS AT SWITCHBACK STAIR).
5. AT EXTERIOR STAIRS, PROVIDE CONCRETE SLAB ON GRADE UNLESS OTHERWISE INDICATED ON THE DRAWINGS. MINIMUM CONCRETE SLAB WIDTH = STAIR CLEAR WIDTH ("W") PLUS 2'-0" (12" EACH SIDE). EDGE TOP CORNERS OF SLAB TO 1/4" RADIUS.
6. ABRASIVE STAIR NOSING: PROVIDE 2" CLEAR BETWEEN END OF STAIR NOSING AND VERTICAL/INSIDE FACE OF STAIR STRINGER. TOOL A GROOVE, 1/8" WIDE BY FULL WIDTH AND THICKNESS OF NOSING AT EACH END OF NOSING. CONTINUE TOOLED JOINT DOWN VERTICAL FACE OF NOSING AT RISER. FILL TOOLED GROOVE WITH SYNTHETIC RUBBER SEALING COMPOUND.
7. INSTALL CONCRETE ANCHORS MINIMUM 6" FROM BOTTOM AND 6" FROM SIDES/EDGES OF CONCRETE.
8. CONNECTION TO CONCRETE SHOWN. SEE DETAIL AC121/TYP FOR CONNECTION AT METAL FRAMING.

AC111 TYP NS — STAIRS - ALUMINUM - THREE RAIL

SHEET 3 OF 3 — 06/10/22

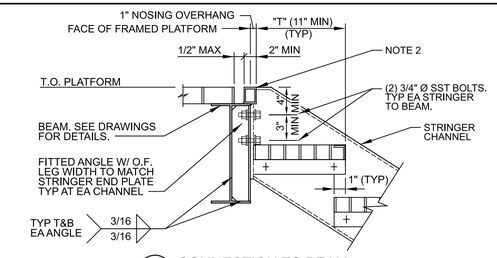

A - CONNECTION TO BEAM

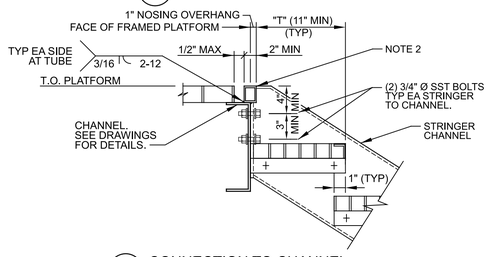

B - CONNECTION TO CHANNEL

NOTES:

1. INSTALL ISOLATION SLEEVES AND DIELECTRIC BREAKS BETWEEN DISSIMILAR METALS. SEE SPECIFICATIONS.
2. TUBE NOSING. TUBE LENGTH = WIDTH BETWEEN CHANNELS MINUS 1/2" EACH END ("W"-1"). WELD TO TOP AND VERTICAL FACE OF BEAM OR CHANNEL. COAT TOP AND VERTICAL OUTSIDE FACE OF TUBE WITH NON-SLIP ABRASIVE.

AC121 TYP NS — STAIRS - ALUMINUM - TOP

06/21/19

0

REV	DATE	BY	DESCRIPTION
			BID SET

DESIGNED CE
DRAWN CE
CHECKED MAK
DATE APRIL 2026

COLORADO REGISTERED PROFESSIONAL ENGINEER 34300 Digitally signed by Mark Alan Kluever DN: cn=Mark Alan Kluever, o=Carollo Engineers, PE, ou=PE, email=mkluever@carollo.com, c=US Date: 2026.03.27 12:54:53 -06'00'

carollo®

THORNTON WATER PROJECT

CITY OF THORNTON - THORNTON WATER PROJECT
CHEMICAL BUILDING AND PRV VAULTS
STRUCTURAL
TYPICAL DETAILS 10

VERIFY SCALES
BAR IS ONE INCH ON ORIGINAL DRAWING
0 1"
IF NOT ONE INCH ON THIS SHEET, ADJUST SCALES ACCORDINGLY

JOB NO. 204403
DRAWING NO. 00TS10
SHEET NO. 143 OF 168

PROJECT NO. 204403-100000 FILE NAME: 20440300TS10.dgn

Plot Date: 27-MAR-2026 8:20:25 AM
User: svcPW
Model: Layout1 ColorTable: gshade.ctb DesignScript: Carollo_Std_Pen_v0905.pen PlotScale: 1:1
LAST SAVED BY: JBaumbarger

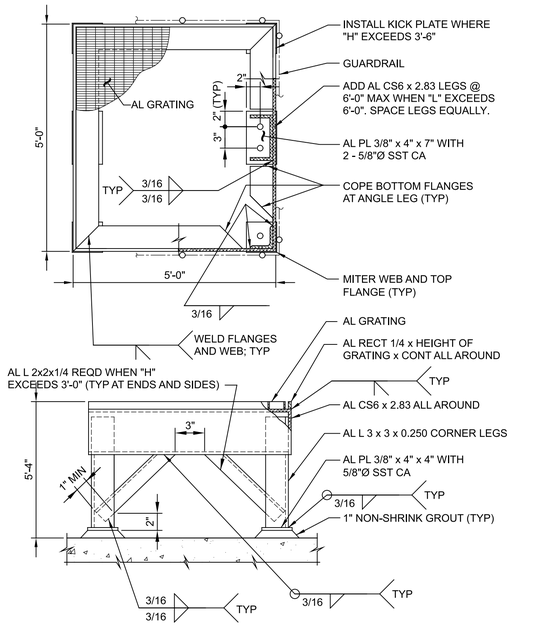

AC132 TYP R — STAIRS - ALUMINUM - PLATFORM

11/20/25

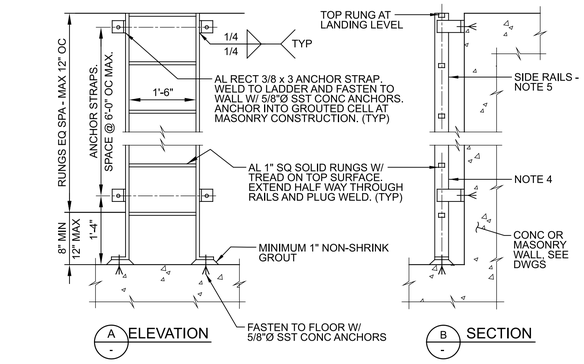

NOTES:

1. INSTALL FALL PREVENTION SYSTEM PER SPEC WHERE HEIGHT OF LADDER EXCEEDS 24'-0".
2. MINIMUM CLEARANCE TO ANY OBSTRUCTION ADJACENT TO LADDER: 2'-6" ON CLIMBING SIDE 1'-3" EACH SIDE OF CENTER LINE, ON EACH SIDE OF LADDER.
3. COAT ALL AL SURFACES IN CONTACT W/ CONC AND MASONRY, AND INSTALL ISOLATION SLEEVES AND WASHERS AT DISSIMILAR METALS, AS SPECIFIED.
4. WHERE NOT ABOVE CONCRETE SLAB, TERMINATE SIDE RAILS AS SHOWN.
5. SIDE RAILS: METAL LADDER - 1/2X4 RECT BAR.
6. BOTTOM OF LADDER PROVIDE HINGED, LOCKABLE LADDER GUARD WHERE DRAWINGS INDICATE "W/ GUARD".

AC300 TYP R — LADDER - WALL MOUNT - AT TOP LANDING

10/27/2025

NOTES:

1. PROVIDE GUARDRAILS AT STAIRS AND AT OPEN SIDED WALKING SURFACES THAT ARE ELEVATED MORE THAN 30" ABOVE GRADE OR ADJACENT CONSTRUCTION.
2. WHERE EQUIPMENT IS LOCATED LESS THAN 10' FROM EDGE OF ROOF AND ELEVATED MORE THAN 30" ABOVE GRADE OR ADJACENT CONSTRUCTION, PROVIDE 42" HIGH GUARDRAIL FORMING A PROTECTIVE BARRIER. PARAPET WALL 42" OR MORE IN HEIGHT MAY BE THE GUARDRAIL AT ROOF LOCATIONS.
3. SEE DRAWINGS AND SPECIFICATIONS FOR GUARDRAIL MATERIAL TYPE(S).
4. PROVIDE HANDRAIL AT BOTH SIDES OF EVERY STAIR HAVING 2 OR MORE RISERS.
5. PROVIDE CONTINUOUS HANDRAIL GRIPPING SURFACES FOR THE FULL LENGTH OF THE STAIR.
6. PROVIDE HANDRAIL EXTENSIONS AT BOTH SIDES OF STAIRS AT TOP AND BOTTOM. HANDRAIL EXTENSION ON STAIR MOUNTED GUARDRAIL MAY BE OMITTED WHERE IT IS PERPENDICULAR TO AND IMPEDES EXIT FLOW.
7. MAKE INSIDE HANDRAIL ON SWITCHBACK STAIRS CONTINUOUS.
8. FOR WALL MOUNTED HANDRAILS, PROVIDE SINGLE RAIL WITH TOP OF RAIL AT 2'-10" HEIGHT ABOVE LANDINGS OR TREAD NOSINGS. PROVIDE MATCHING HANDRAIL ON OPPOSITE SIDE.
9. GUARDRAIL SHALL BE FIXED UNLESS OTHERWISE INDICATED ON THE DRAWINGS.
10. PLACE CENTER OF EMBEDDED POSTS 6" FROM EDGE OF CONCRETE AND 6" FROM FRONT EDGE OF CONCRETE STAIR NOSINGS UNLESS OTHERWISE INDICATED ON THE DRAWINGS.
11. PLACE GUARDRAIL POSTS OPPOSITE EACH OTHER WHERE RAILINGS ARE PARALLEL.
12. FOR GUARDRAIL POSTS MOUNTED TO BEAM OR STAIR CHANNEL, PROVIDE MANUFACTURERS REINFORCED CONNECTION FROM POST TO PLATE. PLATE AND REINFORCED INSERTS SHALL BE ALUMINUM OR STAINLESS STEEL.
13. PROVIDE SLIDING JOINTS AT 24' MAX SPACING FOR EXPANSION OF RAIL AND KICKPLATE. LOCATE SLIDING JOINTS NEAR FACE OF POST. GAP AT TIME OF INSTALLATION SHALL BE BASED ON TEMPERATURE OF GUARDRAIL. PROVIDE 1/4" GAP AT 100°F AND 5/8" GAP AT 0°F. INTERPOLATE GAP FOR OTHER INSTALLATION TEMPERATURES. AT CONCRETE EXPANSION JOINTS, PROVIDE MINIMUM 1" GAP IN SLIDING JOINTS BUT NOT LESS THAN WIDTH OF CONCRETE EXPANSION JOINT. MAKE INSERT SLEEVES IN RAILS LONG ENOUGH TO ALLOW FOR THE FULL RANGE OF MOVEMENT.
14. MATERIAL FOR KICKPLATE CHANNEL SLIDING JOINT PLATES, SHALL BE OF THE SAME MATERIAL AS THE GUARDRAIL.
15. JOINTS FOR STAINLESS STEEL GUARDRAIL AND HANDRAIL SHALL BE COPED, WELDED, AND GROUND SMOOTH.
16. PROVIDE KICKPLATE AT ALL LOCATIONS EXCEPT AT SLOPING GUARDRAIL ON STAIRS AND WHERE GUARDRAIL IS MOUNTED ON A 4" MIN CURB. KICKPLATE MAY BE EXTRUDED OR BENT PLATE AND SHALL BE ATTACHED WITH SST BOLTS IN 5/16" x 3/4" SLOTTED HOLES. BOLT KICKPLATE TO POST WITH BOTTOM 1/4" CLEAR ABOVE FLOOR. FOR SIDE MOUNTED GUARDRAIL, PROVIDE STANDARD SPACER BLOCK BETWEEN POST AND KICKPLATE TO MAINTAIN 1/4" MAX CLEAR SPACING. HAND TIGHTEN AND CENTER PUNCH BOLT THREADS TO LOCK.
17. COAT SURFACES OF ALUMINUM IN CONTACT WITH CONCRETE AS SPECIFIED. PROVIDE NEOPRENE GASKET BETWEEN ALUMINUM AND STEEL.

AC500 TYP NS — GUARDRAIL - HANDRAIL - NOTES

06/21/19

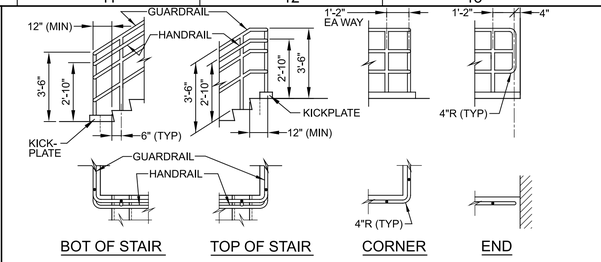

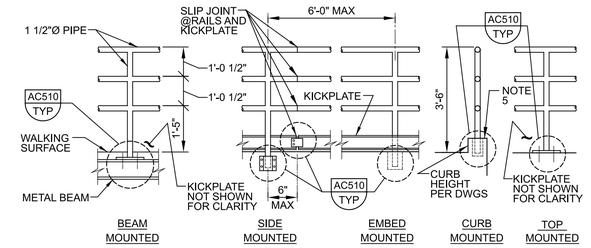

GUARDRAIL ELEVATION

AC504 TYP NS — GUARDRAIL - THREE RAIL

SHEET 1 OF 3 — 06/21/19

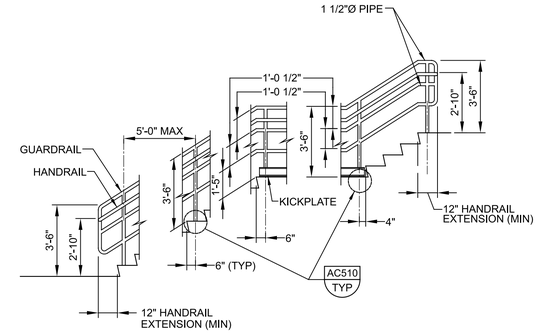

STAIR GUARDRAIL/HANDRAIL ELEVATION

NOTES:

1. THIS DETAIL IS APPLICABLE AT PRIVATE STAIRS IN F, H, AND S OCCUPANCIES WHERE OPERATOR ONLY ACCESS IS REQUIRED. DETAILS AND INSTALLATION SHALL COMPLY WITH THE BUILDING CODE.
2. SEE SPECIFICATIONS AND DETAIL AC500/TYP FOR ADDITIONAL REQUIREMENTS.
3. VARIOUS POST MOUNTING DETAILS ARE ILLUSTRATED. SEE DRAWINGS AND DETAIL AC510/TYP FOR SPECIFIC MOUNTING REQUIREMENTS.
4. HANDRAIL EXTENSIONS ARE REQUIRED ON BOTH SIDES OF STAIR, EXCEPT WHERE INSIDE HANDRAIL IS CONTINUOUS AT SWITCHBACK STAIR.
5. AT CURB, USE EMBEDDED OR TOP MOUNTED POST AS INDICATED ON THE DRAWINGS.

AC504 TYP NS — GUARDRAIL - THREE RAIL

SHEET 2 OF 3 — 06/21/19

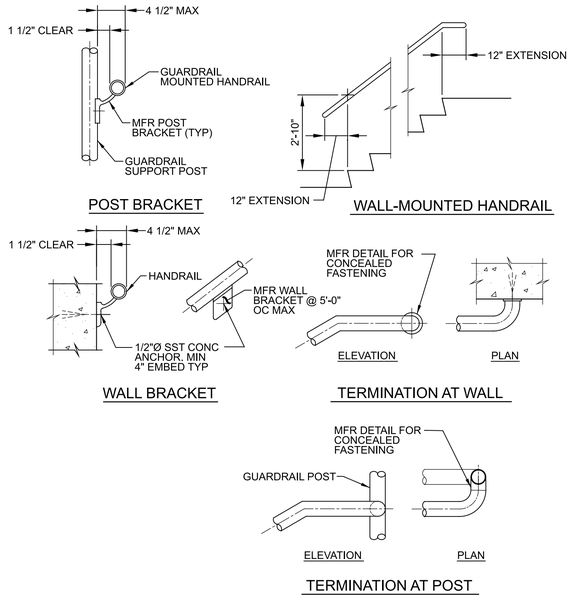

HANDRAIL DETAILS

AC504 TYP NS — GUARDRAIL - THREE RAIL

SHEET 3 OF 3 — 06/21/19

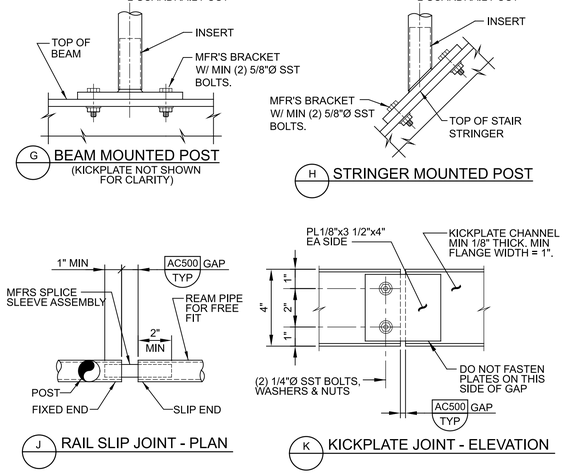

NOTES:

1. SEE DRAWINGS FOR MATERIAL TYPES.
2. COAT ALUMINUM SURFACES IN CONTACT WITH CONCRETE OR DISSIMILAR METALS AS SPECIFIED.
3. KICKPLATE CONNECTION AT POST: MIN 3/4" HORIZONTAL SLOTTED HOLE IN CHANNEL W/ MIN 1/4"Ø BOLT. PROVIDE WASHER AND DOUBLE NUTS. INSIDE NUT FINGER-TIGHT TO PERMIT EXPANSION AND CONTRACTION.

AC510 TYP NS — GUARDRAIL - MOUNTING

SHEET 2 OF 2 — 06/21/19

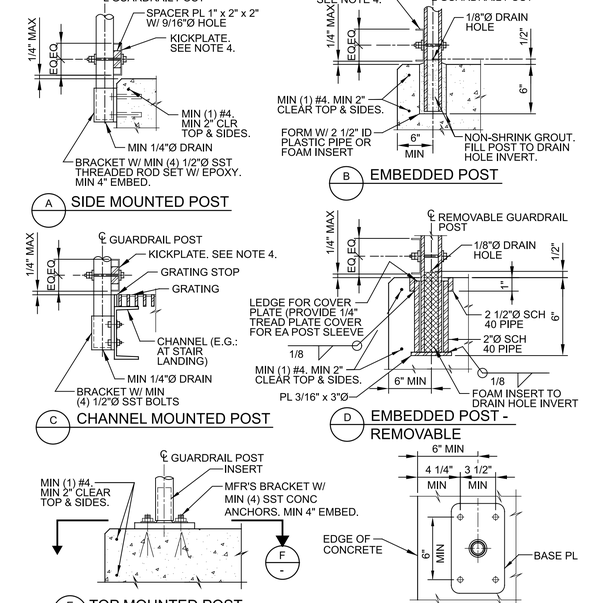

AC510 TYP NS — GUARDRAIL - MOUNTING

SHEET 1 OF 2 — 06/21/19

0

REV	DATE	BY	DESCRIPTION
			BID SET

DESIGNED CE
DRAWN CE
CHECKED MAK
DATE APRIL 2026

COLORADO REGISTERED PROFESSIONAL ENGINEER 34300 — digitally signed by Mark Alan Gilbert; Carollo Engineers; email=mgilbert@carollo.com; 2026.03.31

carollo®

THORNTON WATER PROJECT

CITY OF THORNTON - THORNTON WATER PROJECT

CHEMICAL BUILDING AND PRV VAULTS

STRUCTURAL

TYPICAL DETAILS 11

VERIFY SCALES
BAR IS ONE INCH ON ORIGINAL DRAWING
0 1"
IF NOT ONE INCH ON THIS SHEET, ADJUST SCALES ACCORDINGLY

JOB NO. 204403
DRAWING NO. 00TS11
SHEET NO. 144 OF 168

PROJECT NO. 204403-100000 FILE NAME: 20440300TS11.dgn

Plot Date: 27-MAR-2026 8:20:17 AM
User: svcPW
PlotScale: 1:1
DesignScript: Carollo_Std_Pen_v0905.pen
ColorTable: gshade.ctb
Model: Layout1
LAST SAVED BY: JBaumbarger

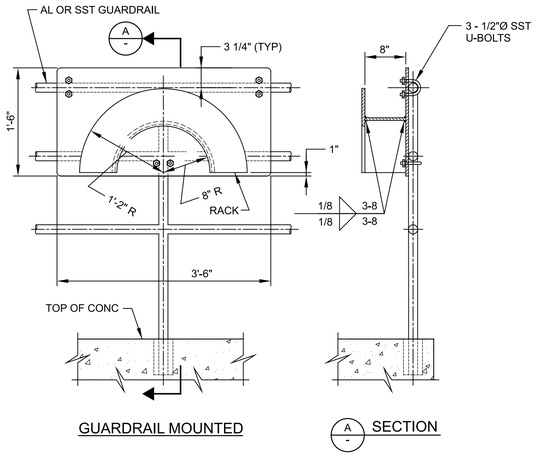

GUARDRAIL MOUNTED

A - SECTION

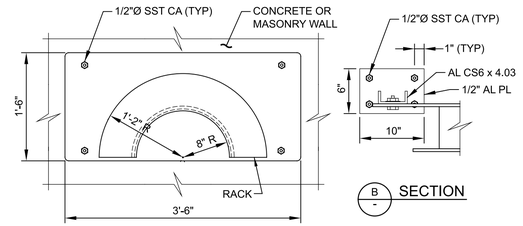

B - SECTION

WALL MOUNTED

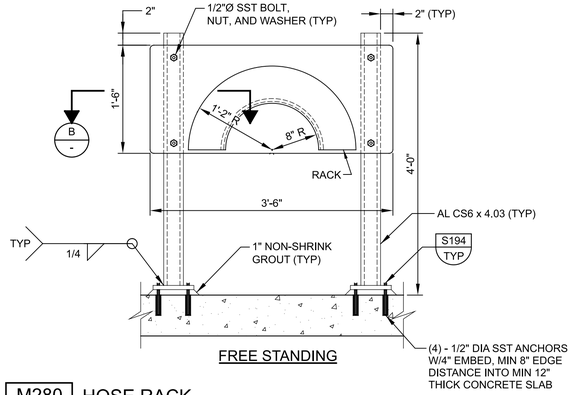

FREE STANDING

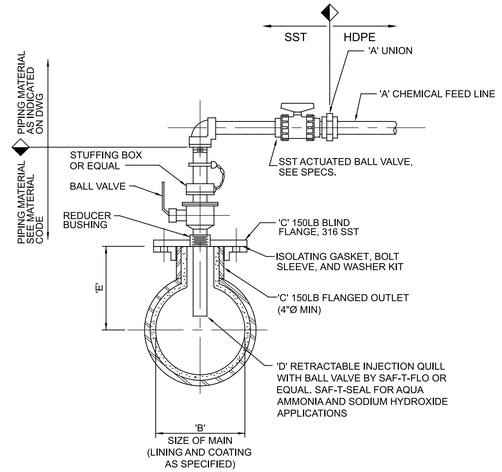

LOCATION	CHEMICAL	MATERIAL	DIMENSIONS (IN.)				
			A	B	C	D	E
CHEMICAL INJECTION MANHOLE	SPE	1	1	42	4	1	16

INJECTION QUILL MATERIAL PIPE CODE NO.
1. 316 SST
2. HASTELLOY C
3. TITANIUM

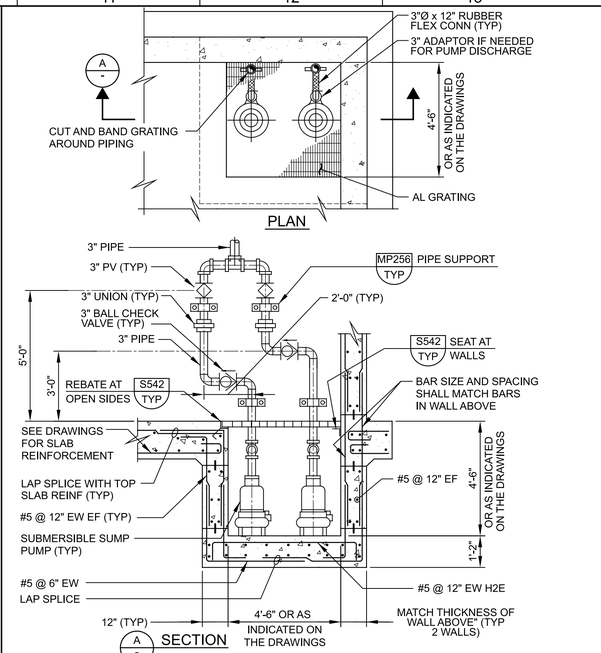

NOTES:

1. HOSE RACK SHALL BE FABRICATED FROM 3/16" ALUMINUM PLATE. ROUND ALL EDGES SMOOTH.
2. HOSE RACKS INSTALLED IN YARD LOCATIONS SHALL BE FREESTANDING. ANCHOR TO A 4'-6" LONG x 2'-0" WIDE x 12" DEEP CONCRETE PAD WITH #5@12" EW, T&B.
3. WALL MOUNTED HOSE RACKS ON MASONRY WALL SHALL BE FASTEN TO GROUTED CELLS.

M280 TYP S — HOSE RACK

SHEET 1 OF 2 10/28/13

M280 TYP R — HOSE RACK

SHEET 2 OF 2 10/28/13

M707 TYP — CHEMICAL DIFFUSER

01/24/97

MA111 TYP N — DUPLEX SUMP PUMP

12/18/2023

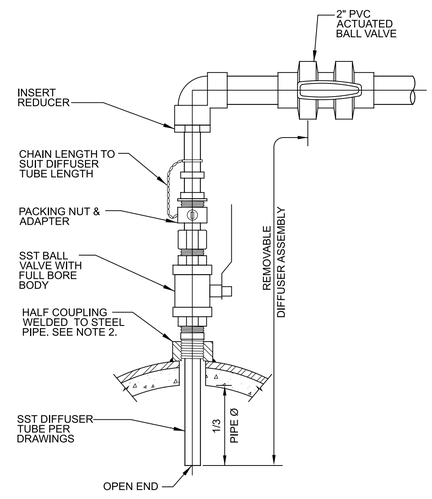

NOTES:

1. DIFFUSER AND DIFFUSER MATERIALS PER THE SPECIFICATIONS.
2. USE SERVICE SADDLE FOR PIPE CONNECTION FOR DUCTILE IRON PIPE.

MC777 TYP J — DIFFUSER - "STAB TUBE" AT WELDOLET

01/20/26

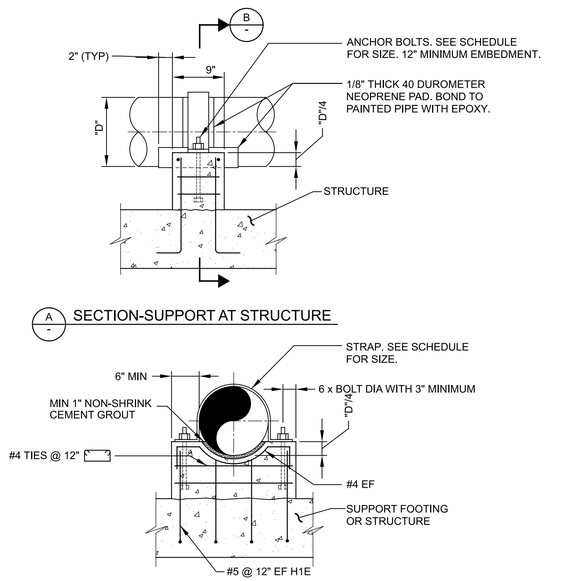

MP100 TYP R — CONCRETE PIPE SUPPORT

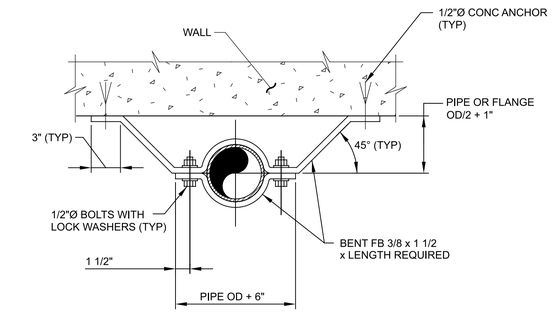

NOTE:

1. REFER TO THE SPECIFICATIONS FOR MATERIAL REQUIREMENTS.

MP256 TYP N — PIPE SUPPORT - WALL - VERTICAL PIPE ON CLAMP SWAY BRACE

12/1/2022

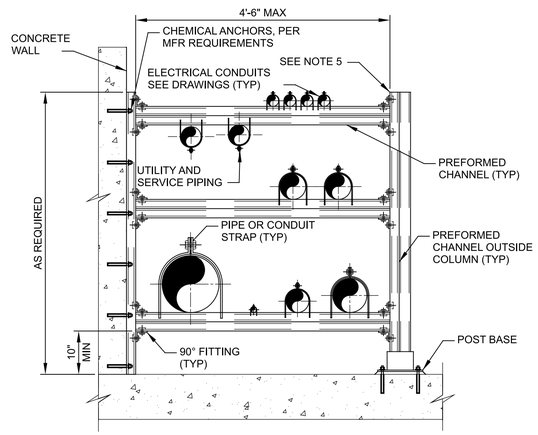

NOTES:

1. TOTAL MAXIMUM ALLOWABLE LOAD PER MFR RECOMMENDATIONS.
2. COLUMNS SHALL BE 5'-0" MAXIMUM HORIZONTAL SPACING.
3. FOR BOTTOM OF PIPE (BOP) OR RACK ELEVATIONS, SEE DRAWINGS.
4. LOCATE LARGE DIAMETER LIQUID FILLED PIPING ADJACENT TO INSIDE COLUMN OR WALL.
5. EXTEND OUTSIDE COLUMN TO CEILING WHEN POSSIBLE AND ATTACH, DO NOT EXCEED 10'-0" IN LENGTH.
6. WHEN POSSIBLE PLACE ELECTRICAL AND INSTRUMENT TRAYS ON OUTRIGGER OR BRACKETS ATTACHED TO OUTSIDE COLUMN, NOT SHOWN.
7. VERTICAL RACK SPACING SHOULD ALLOW ACCESS TO PIPING TOWARD BACK OF RACK.

MP274 TYP S — PREFORMED CHANNEL PIPE SUPPORT RACK 0

02/08/24

REV	DATE	BY	DESCRIPTION
			BID SET

DESIGNED CE
DRAWN CE
CHECKED CE
DATE MAY 2026

COLORADO LICENSED — 57176 — Digitally signed by John Alexander Carollo — PROFESSIONAL ENGINEER

carollo

THORNTON WATER PROJECT

CITY OF THORNTON - THORNTON WATER PROJECT

CHEMICAL BUILDING AND PRV VAULTS

TYPICAL

DETAIL - MECHANICAL 1

VERIFY SCALES
BAR IS ONE INCH ON ORIGINAL DRAWING
0 1"
IF NOT ONE INCH ON THIS SHEET, ADJUST SCALES ACCORDINGLY

JOB NO. 204403
DRAWING NO. TM01
SHEET NO. 145 OF 168

LAST SAVED BY: AEvans

PROJECT NO. 204403-100000 FILE NAME: 204403_TM01.dgn

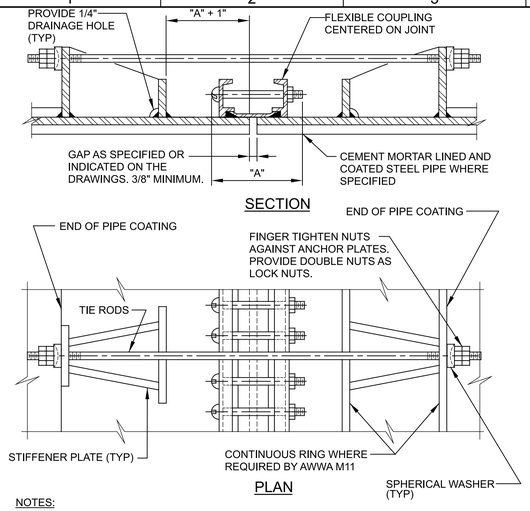

NOTES:

1. ALL EXPOSED FLEXIBLE COUPLINGS SHALL HAVE TIE RODS UNLESS SPECIFICALLY INDICATED OTHERWISE ON THE DRAWINGS.
2. BASE PIPE THRUST ON TEST PRESSURE.
3. PIPE THRUST = 0.7854 x D^2 x TEST PRESSURE, WHERE "D" IS PIPE "OD".
4. ANCHOR LUGS AND TIE RODS SHALL BE DESIGNED BY PIPE MANUFACTURER IN ACCORDANCE WITH AWWA M11 STEEL PIPE MANUAL.
5. GRIND ALL CORNERS SMOOTH.
6. COAT ALL EXPOSED STEEL SURFACES WITH EPOXY IN ACCORDANCE WITH SPECIFICATIONS.

MP330 TYP J — STEEL PIPE FLEXIBLE COUPLING TIE DOWN

11/25/25

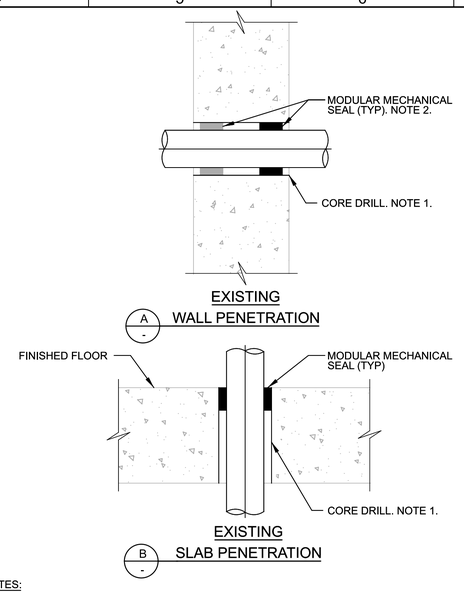

NOTES:

1. CORE DRILL DIAMETER, PROCEDURES, AND POST -DRILLING SURFACE PREPARATION PER MODULAR MECHANICAL SEAL MANUFACTURER'S RECOMMENDATIONS FOR SPECIFIC PIPE OD.
2. WALLS 12" OR THICKER INSTALL MODULAR MECHANICAL SEAL AT BOTH ENDS OF PENETRATION.

MP544 TYP — WALL PENETRATION - CAST-IN SLEEVE W/ BARRIER SEALS

SHEET 2 OF 2 — 07/17/25

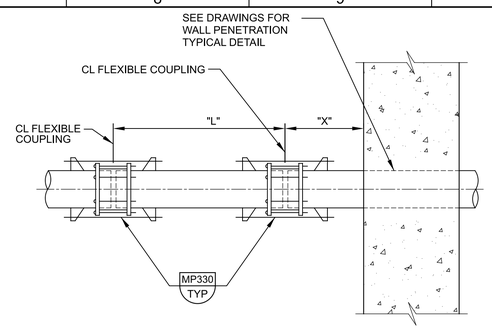

NOMINAL PIPE DIAMETER IN INCHES	"L"	"X"
LESS THAN 31"	5'-0"	2'-0"
GREATER THAN 31" - 42"	8'-0"	5'-0"
GREATER THAN 42"- 54"	10'-0"	5'-0"

NOTE:

1. PIPES SHALL BE INSTALLED STRAIGHT WITHOUT HORIZONTAL OR VERTICAL OFFSET. DO NOT USE JOINT ANGULAR DEFLECTION TO MAKE UP FOR MISALIGNED PIPE.

MP582 TYP R — WALL CONNECTION - STEEL - RESTRAINED FLEXIBLE COUPLINGS

12/01/22

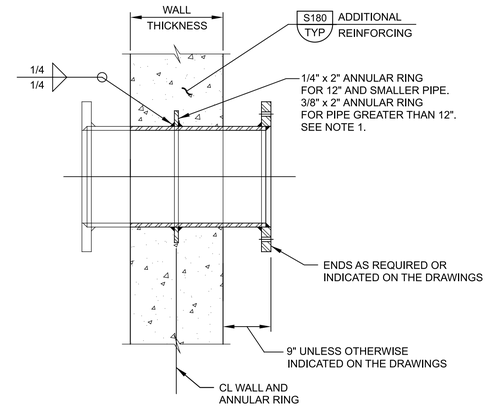

NOTE:

1. INSTALL ANNULAR RING ON PIPE SO THAT IT IS LOCATED AT CENTER OF WALL AND IN PLANE PARALLEL TO FACE OF WALL.

MP604 TYP N — WALL PENETRATION - STEEL - FABRICATED WALL PIPE (UP TO 42" DIA)

12/01/22

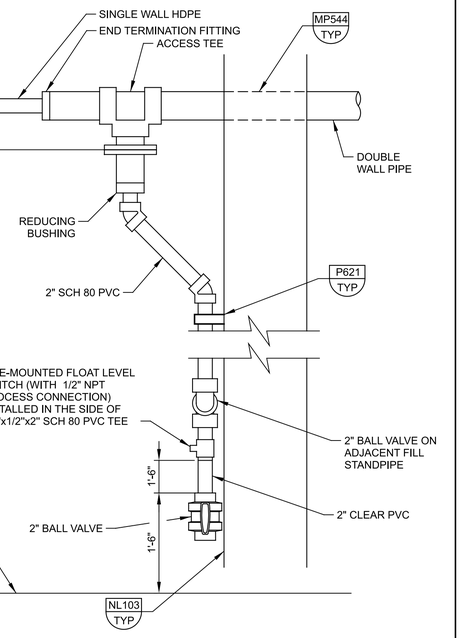

MP709 TYP J — CHEMICAL LEAK DETECTION PIPING

06/21/21

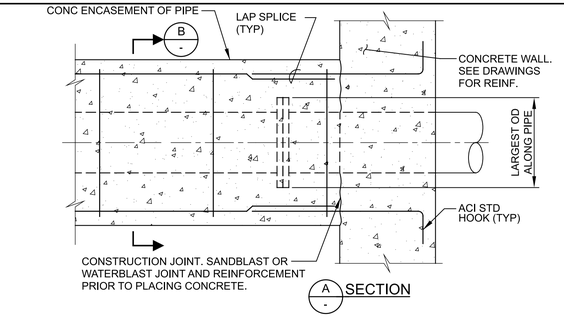

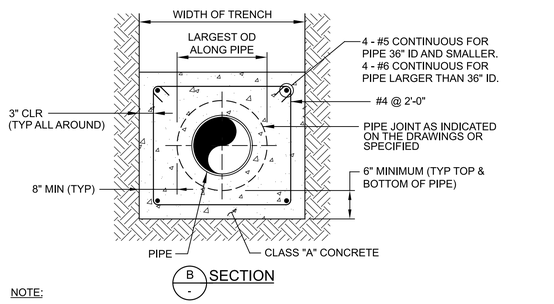

NOTE:

1. TYPE OF PIPE AND TYPE OF PIPE JOINT OR COUPLER AS INDICATED ON THE DRAWINGS.

P040 TYP NS — CONCRETE ENCASEMENT OF PIPE

SHEET 1 OF 3 — 03/24/15

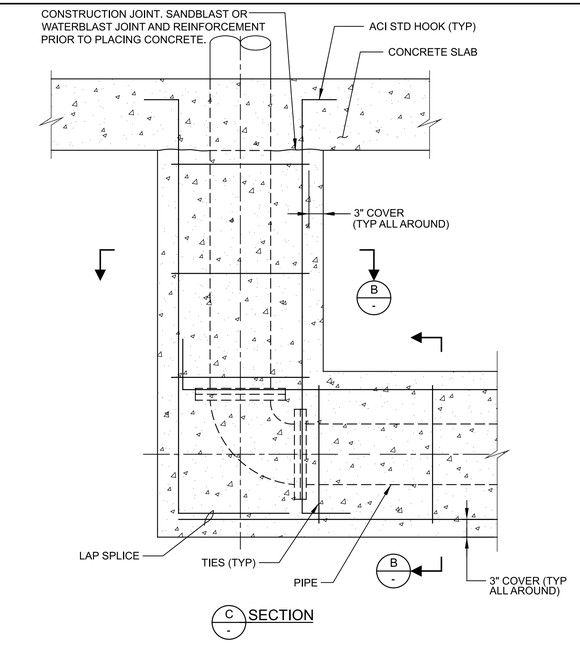

P040 TYP NS — CONCRETE ENCASEMENT OF PIPE

SHEET 2 OF 3 — 03/24/15

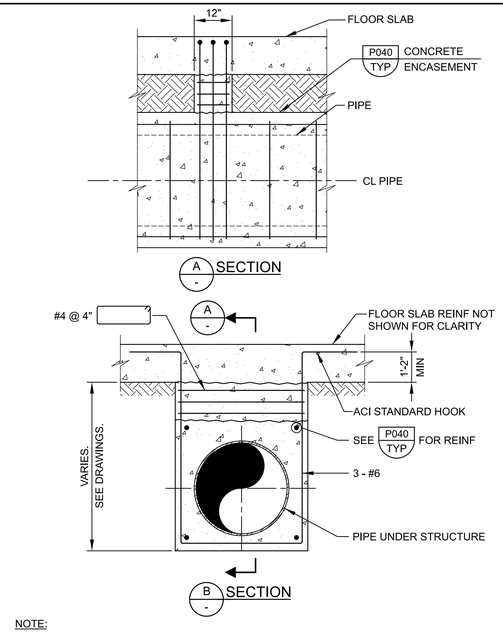

NOTE:

1. MAXIMUM SPACING BETWEEN PIPE SUPPORTS UNDER SLABS IS 10'-0".

P040 TYP J — CONCRETE PIPE ENCASEMENT - SUPPORT UNDER SLABS AT PILE / PIER FOUNDATIONS

SHEET 3 OF 3 — 11/25/25 — 0

REV	DATE	BY	DESCRIPTION
			BID SET

DESIGNED CE
DRAWN CE
CHECKED CE
DATE MAY 2026

COLORADO LICENSED PROFESSIONAL ENGINEER 57176 Signed by John Alexander Carollo, Attn: Carollo Engineers, P.C. 1 of 1 PE

CITY OF THORNTON - THORNTON WATER PROJECT

CHEMICAL BUILDING AND PRV VAULTS

TYPICAL

DETAIL - MECHANICAL 2

VERIFY SCALES
BAR IS ONE INCH ON ORIGINAL DRAWING
0 1"
IF NOT ONE INCH ON THIS SHEET, ADJUST SCALES ACCORDINGLY

JOB NO. 204403
DRAWING NO. TM02
SHEET NO. 146 OF 168

LAST SAVED BY: AEvans

PROJECT NO. 204403-100000 FILE NAME: 204403_TM02.dgn

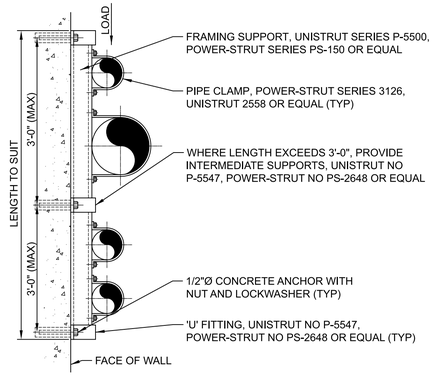

NOTES:

1. HOT DIP GALVANIZE PARTS AFTER FABRICATION.
2. WHERE SUBMERGED, PARTIALLY SUBMERGED, OR LOCATED WITHIN 24" OF A WATER SURFACE, PARTS SHALL BE TYPE 316 STAINLESS STEEL.
3. WHERE LOCATED IN CHEMICAL OR CORROSIVE AREAS, PARTS SHALL BE FRP OR TYPE 316 STAINLESS STEEL.

P621 TYP — FLUSH MOUNTED PIPE SUPPORT

(FOR PIPE 4"Ø AND SMALLER)

J 02/05/18

ADJUSTABLE PIPE SADDLE SUPPORT SCHEDULE (INCHES)					
SIZE OF SUPPORTED PIPE **	PIPE SIZE "A"	PIPE SIZE "B"	"C"	"D" MINIMUM	"D" MAXIMUM
2 1/2 *	2 1/2	1 1/2	12	8	13
3	2 1/2	1 1/2	12	8 1/2	13 1/2
3 1/2	2 1/2	1 1/2	12	8 1/2	13 1/2
4	3	2 1/2	12	9 1/2	14
6	3	2 1/2	12	10 1/2	15 1/2
8	3	2 1/2	12	11 1/2	16 1/2
10	3	2 1/2	12	13 1/2	18 1/2
12	3	2 1/2	12	15	19 1/2
14	4	3	12	16 1/2	20 1/2
16	4	3	12	17 1/2	22 1/2
18	6	3 1/2	14	19 1/2	24
20	6	3 1/2	14	21	25 1/2
24	6	4	14	23 1/2	28 1/2
30	6	4	14	27	31 1/2
32	6	4	14	28 1/2	32 1/2
36	6	4	14	30 1/2	34 1/2

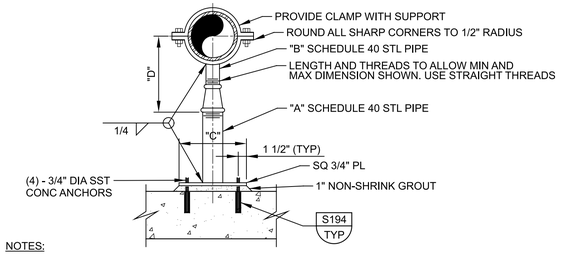

NOTES:

1. HOT-DIP GALVANIZED SUPPORT AFTER FABRICATION.
2. * = USE 2 1/2" SUPPORTS FOR PIPES LESS THEN 2 1/2"Ø.
3. ** = NOMINAL PIPE SIZE.

P624 TYP — ADJUSTABLE PIPE SUPPORT

R 08/24/22

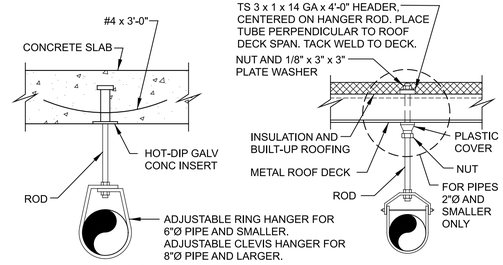

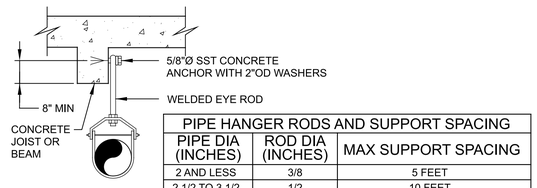

PIPE HANGER RODS AND SUPPORT SPACING		
PIPE DIA (INCHES)	ROD DIA (INCHES)	MAX SUPPORT SPACING
2 AND LESS	3/8	5 FEET
2 1/2 TO 3 1/2	1/2	10 FEET
4 TO 5	5/8	10 FEET
6	3/4	10 FEET
8	7/8	10 FEET
10	7/8	10 FEET
12	7/8	10 FEET

NOTES:

1. ISOLATE ALL COPPER PIPE FROM SUPPORT WITH PVC TAPE.
2. ALL MATERIALS SHALL BE HOT-DIP GALVANIZED.
3. PROVIDE ADDITIONAL HANGER AT EACH SIDE OF ALL VALVES 4 INCHES AND LARGER.

P630 TYP — PIPE HANGER

J 01/20/26

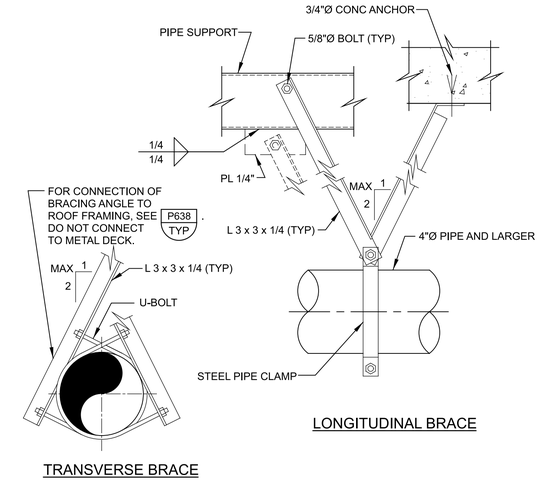

NOTES:

1. MAXIMUM LONGITUDINAL BRACE SPACING = 20'-0".
2. MAXIMUM TRANSVERSE BRACE SPACING = 20'-0".
3. DO NOT CONNECT BRACE TO BOTTOM OF ROOF BEAM OR C8 PIPE SUPPORT, EXCEPT AS SHOWN IN P638 TYP.
4. USE LONGITUDINAL AND TRANSVERSE BRACES FOR PIPES 4" AND LARGER.

P630 TYP — PIPE HANGER

J SHEET 2 OF 2 01/20/26

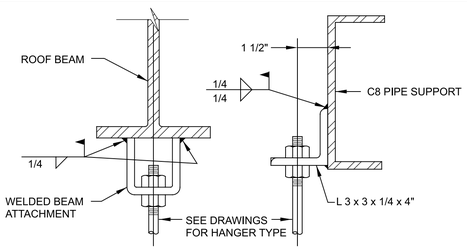

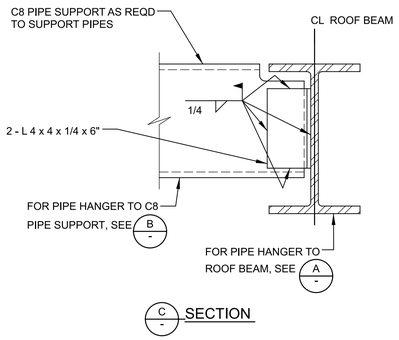

P636 TYP — PIPE HANGER SUPPORT

08/01/05

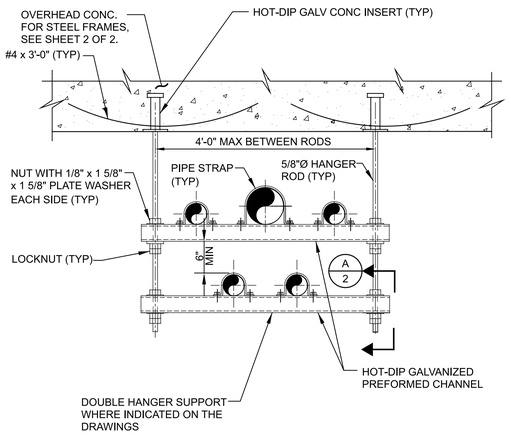

NOTES:

1. HANGER SPACING SHALL BE BASED ON MAXIMUM SPAN ALLOWABLE FOR ANY INDIVIDUAL PIPE.
2. ALL-THREAD ROD SHALL BE USED ONLY FOR DOUBLE SUPPORTS.
3. ALL MATERIALS SHALL BE HOT-DIP GALVANIZED.

P638 TYP — DOUBLE ROD PIPE HANGER

J 1 OF 2 07/31/08

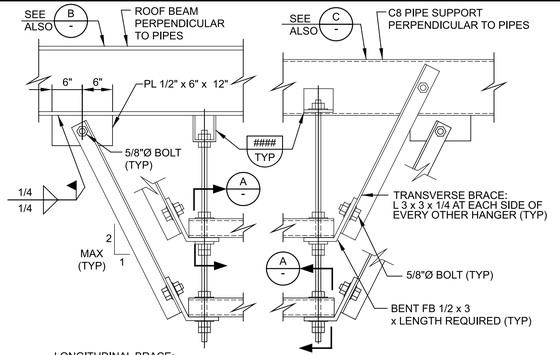

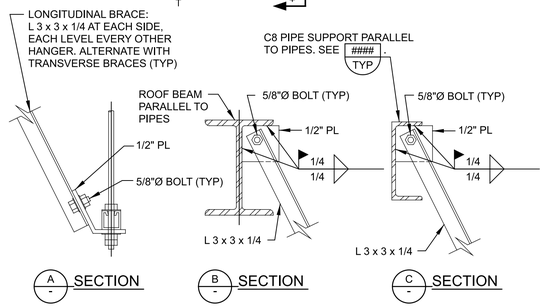

P638 TYP — DOUBLE ROD PIPE HANGER

N SHEET 2 OF 2 07/31/08

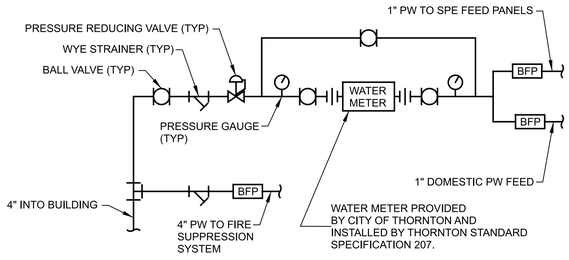

P655 TYP — POTABLE WATER SYSTEM SCHEMATIC

J 0

REV	DATE	BY	DESCRIPTION
			BID SET

DESIGNED CE
DRAWN CE
CHECKED CE
DATE MAY 2026

COLORADO LICENSED — 57176 — Signed by: John Alexander Carollo, Attn: Carollo Engineers, P.C. — PROFESSIONAL ENGINEER

carollo®

THORNTON WATER PROJECT

CITY OF THORNTON - THORNTON WATER PROJECT

CHEMICAL BUILDING AND PRV VAULTS

TYPICAL

DETAIL - MECHANICAL 2

VERIFY SCALES
BAR IS ONE INCH ON ORIGINAL DRAWING
0 1"
IF NOT ONE INCH ON THIS SHEET, ADJUST SCALES ACCORDINGLY

JOB NO. 204403
DRAWING NO. TM03
SHEET NO. 147 OF 168

LAST SAVED BY: AEvans

PROJECT NO. 204403-100000 FILE NAME: 204403_TM03.dgn

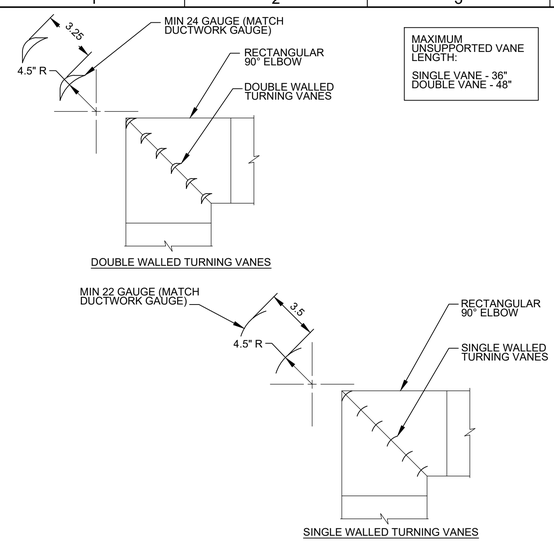

MAXIMUM UNSUPPORTED VANE LENGTH:

SINGLE VANE - 36"
DOUBLE VANE - 48"

NOTES:

1. INSTALL VANES IN SECTIONS OR USE TIE RODS TO LIMIT THE UNBRACED VANE LENGTH.
2. VANES SHALL BE SECURELY FASTENED TO RUNNERS.
3. ALL VANES SHALL BE SECURE AND STABLE IN INSTALLED OPERATING POSITION. IF NECESSARY, AT CERTAIN VELOCITIES OR PRESSURES WELD VANES TO RUNNERS ON APPROPRIATE INTERVALS ALONG RUNNERS.
4. OTHER VANE SIZES, SPACINGS OR CONFIGURATIONS CAN BE REVIEWED BY ENGINEER OF RECORD FOR APPROVAL.

HA320 TYP — TURNING VANES FOR METAL DUCT

SHEET 1 OF 2 5/17/18

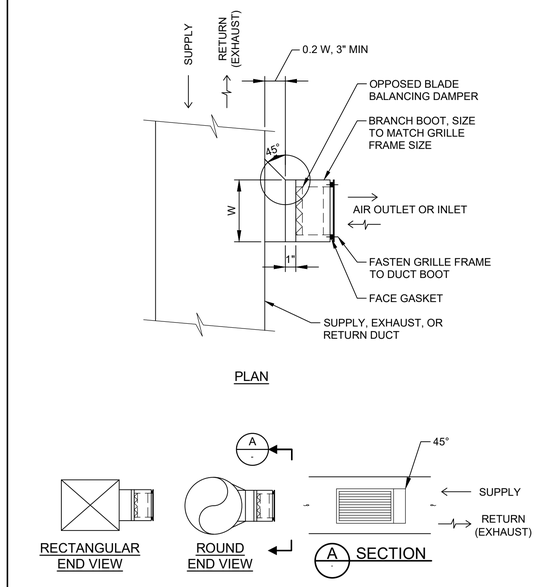

HA520 TYP S — GRILLE - SUPPLY/RETURN/EXHAUST - METAL

5/05/25

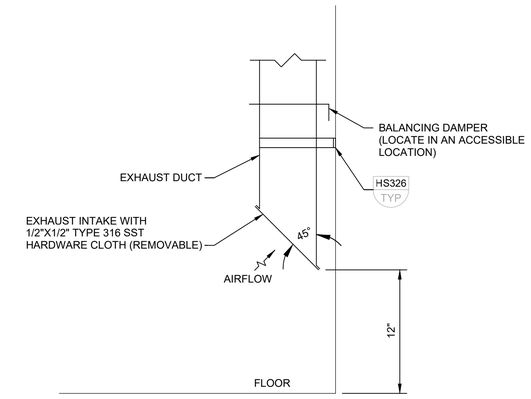

HD540 TYP — TERMINATION - EXHAUST DUCT DROP

5/17/18

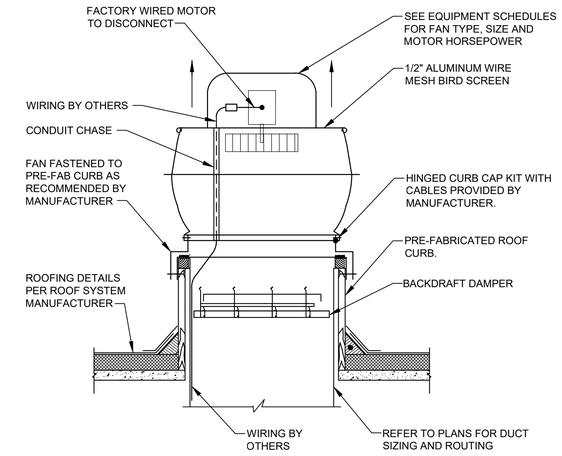

NOTES:

1. BACKDRAFT DAMPER LOCATED IN CURB, PROVIDED BY EXHAUST FAN MANUFACTURER. REFER TO SCHEDULES AND SPECIFICATIONS FOR TYPE REQUIRED.
2. SEE FLOOR PLANS AND/OR SECTIONS FOR EXACT DUCT CONFIGURATION AND SIZING.
3. FAN SHALL BE HIGH WIND RATED. CURB SHALL BE HIGH WIND RATED AND PROVIDED BY FAN MANUFACTURER. REFER TO MANUFACTURER FOR INSTALLATION REQUIREMENTS.
4. TOP OF CURB SHALL BE LEVEL. TAPER SIDES OF PREFAB CURB AS REQUIRED.
5. REFER TO FAN SPECIFICATION FOR CURB HEIGHT.

HE126 TYP — FAN - ROOF MOUNTED CENTRIFUGAL EXHAUST

1 OF 3 11/18/20

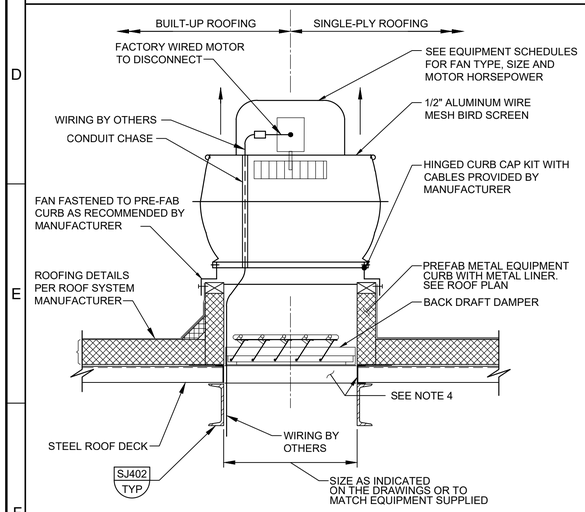

STEEL ROOF DECK

NOTES:

1. BACKDRAFT DAMPER LOCATED IN CURB, PROVIDED BY EXHAUST FAN MANUFACTURER. REFER TO SCHEDULES AND SPECIFICATIONS FOR TYPE REQUIRED.
2. SEE FLOOR PLANS AND/OR SECTIONS FOR EXACT DUCT CONFIGURATION AND SIZING.
3. FAN SHALL BE HIGH WIND RATED. CURB SHALL BE HIGH WIND RATED AND PROVIDED BY FAN MANUFACTURER. REFER TO MANUFACTURER FOR INSTALLATION REQUIREMENTS.
4. PROVIDE SHEET METAL "C" CLOSURE AROUND DECK (TYP. 4 SIDES).
5. REFER TO FAN SPECIFICATION FOR CURB HEIGHT.
6. TOP OF CURB SHALL BE LEVEL. TAPER SIDES OF PREFAB CURB AS REQUIRED.

HE126 TYP — FAN - ROOF MOUNTED CENTRIFUGAL EXHAUST

2 OF 3 11/18/20

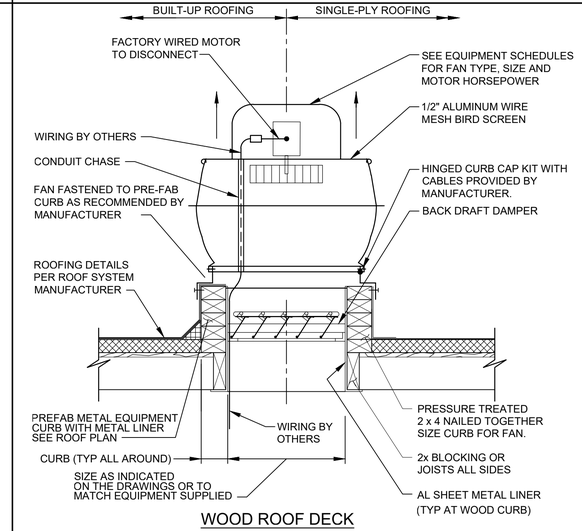

WOOD ROOF DECK

NOTES:

1. BACKDRAFT DAMPER LOCATED IN CURB, PROVIDED BY EXHAUST FAN MANUFACTURER. REFER TO SCHEDULES AND SPECIFICATIONS FOR TYPE REQUIRED.
2. SEE FLOOR PLANS AND/OR SECTIONS FOR EXACT DUCT CONFIGURATION AND SIZING.
3. FAN SHALL BE HIGH WIND RATED. CURB SHALL BE HIGH WIND RATED AND PROVIDED BY FAN MANUFACTURER. REFER TO MANUFACTURER FOR INSTALLATION REQUIREMENTS.
4. TOP OF CURB SHALL BE LEVEL. TAPER SIDES OF PREFAB CURB AS REQUIRED.
5. REFER TO FAN SPECIFICATION FOR CURB HEIGHT.

HE126 TYP — FAN - ROOF MOUNTED CENTRIFUGAL EXHAUST

3 OF 3 11/18/20

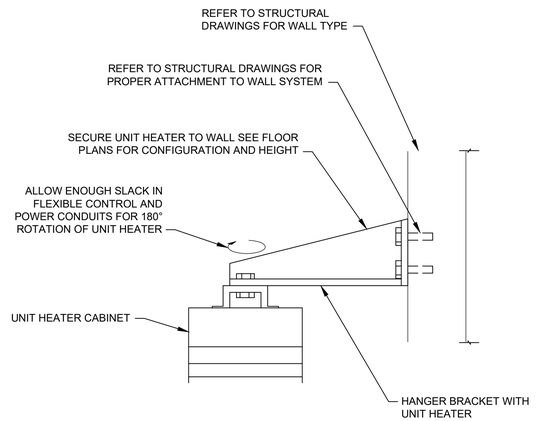

HE350 TYP — UNIT HEATER - WALL MOUNT - ELECTRIC

5/23/18

REV	DATE	BY	DESCRIPTION
			BID SET

DESIGNED CE
DRAWN CE
CHECKED CAG
DATE MAY 2026

COLORADO LICENSED — CHRISTINA A. EMERSON — 0050567 — PROFESSIONAL ENGINEER

CITY OF THORNTON - THORNTON WATER PROJECT

CHEMICAL BUILDING AND PRV VAULTS

HVAC

TYPICAL DETAIL - 1

VERIFY SCALES: BAR IS ONE INCH ON ORIGINAL DRAWING (0 — 1") IF NOT ONE INCH ON THIS SHEET, ADJUST SCALES ACCORDINGLY

JOB NO. 204403
DRAWING NO. 00TH01
SHEET NO. 148 OF 168

LAST SAVED BY: chernandez

PROJECT NO.:204403-100000 FILE NAME: 204403_00TH01.dwg

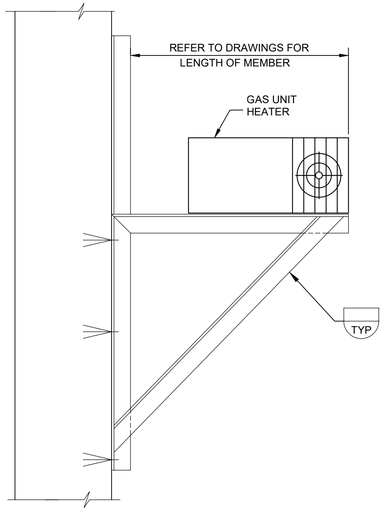

HE360 TYP — UNIT HEATER - WALL-MOUNT - GAS-FIRED

5/24/18

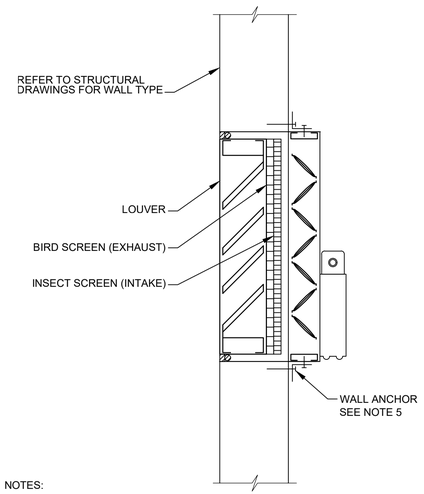

NOTES:

1. ALL FASTENERS SHALL BE STAINLESS STEEL.
2. REFER TO MANUFACTURER RECOMMENDATIONS FOR INSTALLATION.
3. COORDINATE THE SEQUENCE OF INSTALLATION OF DAMPERS AND LOUVERS WITH ANY STRUCTURAL BRACING TO THE WALL.
4. REFER TO ARCHITECTURAL AND STRUCTURAL DRAWINGS FOR DETAILS OF WALL OPENINGS AND FLASHING DETAILS
5. CONTRACTOR IS RESPONSIBLE FOR ATTACHMENT TO WALL. COORDINATE WITH LOUVER MANUFACTURER. SEE PROJECT SPECIFICATIONS FOR ANCHOR REQUIREMENTS.

HE520 TYP — LOUVER - STATIONARY - INTAKE/EXHAUST WITH MOTORIZED DAMPER MOUNTING

SHEET 2 OF 2 2/23/23

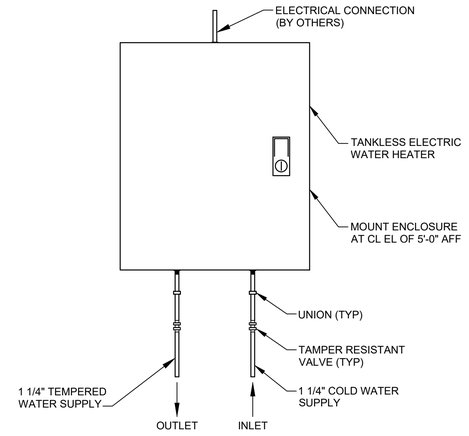

HP530 TYP — WATER HEATER - INSTANTANEOUS ELECTRIC - SAFETY EQUIPMENT -WALL MOUNTED

SHEET 1 OF 2 10/6/20

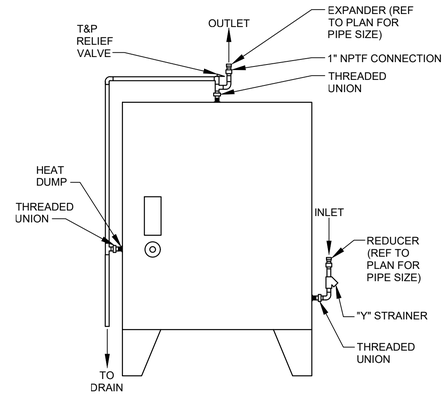

HP530 TYP — WATER HEATER - INSTANTANEOUS ELECTRIC - SAFETY EQUIPMENT - FLOOR MOUNTED

SHEET 2 OF 2 10/6/20

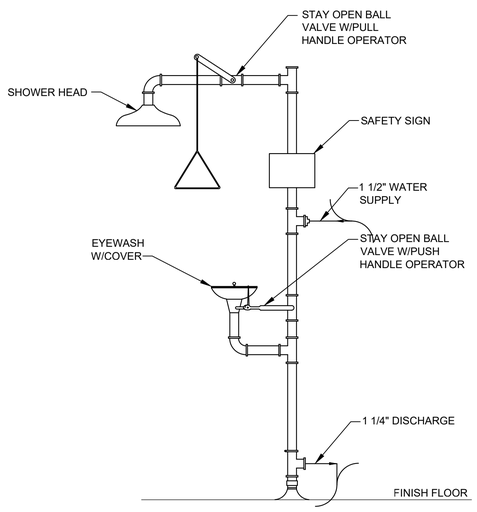

NOTES:

1. REFER TO CONTRACT DOCUMENTS FOR SUPPLY AND DISCHARGE PIPING INSULATION REQUIREMENTS.
2. OUTDOOR STATIONS SHALL BE SUPPLIED WITH FREEZE AND SCALD PROTECTION VALVES.
3. CONTRACTOR TO COORDINATE DISCHARGE PIPE CONNECTION WITH MANUFACTURER.

HP610 TYP — EMERGENCY SHOWER & EYE/FACE WASH - NON FREEZE PROTECTED

9/13/18

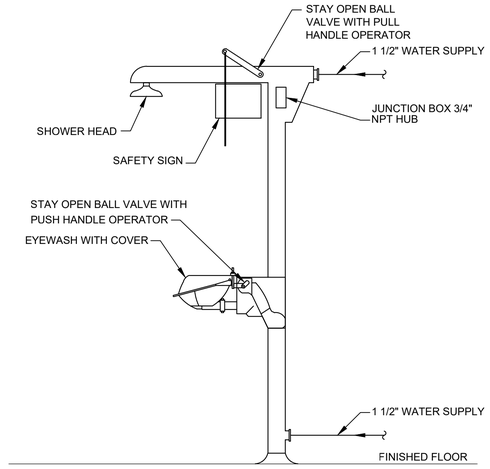

NOTES:

1. REFER TO CONTRACT DOCUMENTS FOR SUPPLY AND DISCHARGE PIPING INSULATION REQUIREMENTS.
2. OUTDOOR STATIONS SHALL BE SUPPLIED WITH FREEZE AND SCALD PROTECTION VALVES.
3. CONTRACTOR TO COORDINATE DISCHARGE PIPE CONNECTION WITH MANUFACTURER.

HP630 TYP — EMERGENCY SHOWER & EYE/FACE WASH - FREEZE PROTECTED

8/16/22

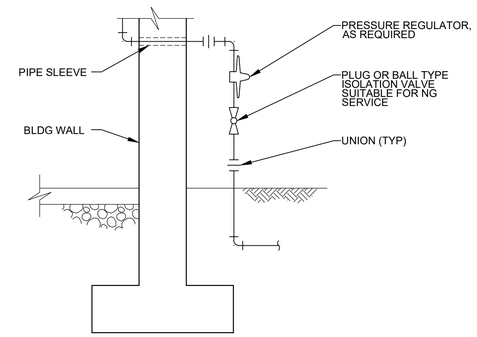

NOTE:

1. DETAIL IS FOR BUILDING CONNECTIONS SEPARATE FROM NATURAL GAS METERING. IF THE DRAWINGS REQUIRE METERING AT THE BUILDING, INSTALL PRESSURE REGULATOR AND CUSTOM ISOLATION VALVE DOWNSTREAM OF UTILITY METER.

HP910 TYP — NATURAL GAS CONNECTION AT BUILDING

9/13/18

REV	DATE	BY	DESCRIPTION
			BID SET

DESIGNED CE
DRAWN CE
CHECKED CAG
DATE MAY 2026

COLORADO LICENSED — CHRIS A. GAROLLO — 0050567 — Digitally signed by Chris A. Garollo — Contact Info: Carollo Engineers, PC — 2020.09.08 14:18:51 -06'00' — PROFESSIONAL ENGINEER

carollo®

THORNTON WATER PROJECT

CITY OF THORNTON - THORNTON WATER PROJECT

CHEMICAL BUILDING AND PRV VAULTS

HVAC

TYPICAL DETAIL -2

VERIFY SCALES
BAR IS ONE INCH ON ORIGINAL DRAWING
0 1"
IF NOT ONE INCH ON THIS SHEET, ADJUST SCALES ACCORDINGLY

JOB NO. 204403
DRAWING NO. 00TH02
SHEET NO. 149 OF 168

LAST SAVED BY: chernandez

PROJECT NO.:204403-100000 FILE NAME: 204403_00TH02.dwg

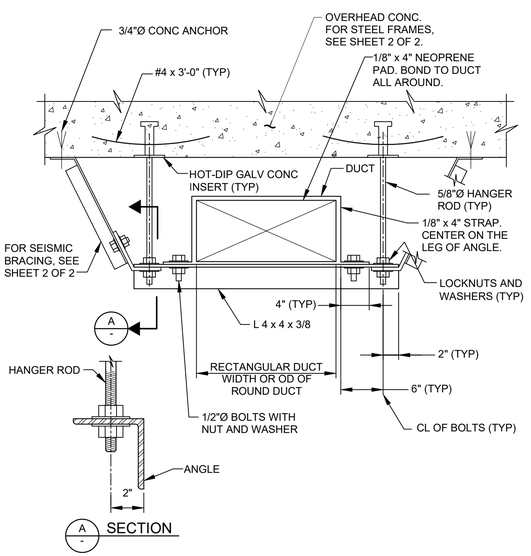

NOTES:

1. ALL METAL SHALL BE HOT-DIP GALV STEEL UNLESS OTHERWISE INDICATED ON THE DWGS.
2. SEE DRAWINGS FOR THE SIZE OF DUCT.
3. DUCT SUPPORT FOR RECTANGULAR/ROUND DUCT - TRAPEZE FROM OVERHEAD THROUGH WOOD CEILING JOIST TO WOOD TRUSS.

HS184 TYP — DUCT SUPPORT FOR RECTANGULAR/ROUND DUCT - TRAPEZE FROM OVERHEAD

SHEET 1 OF 2 5/05/25

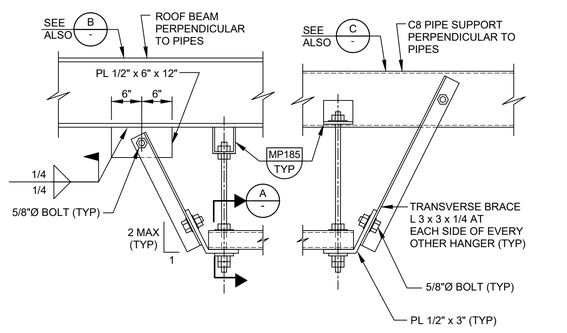

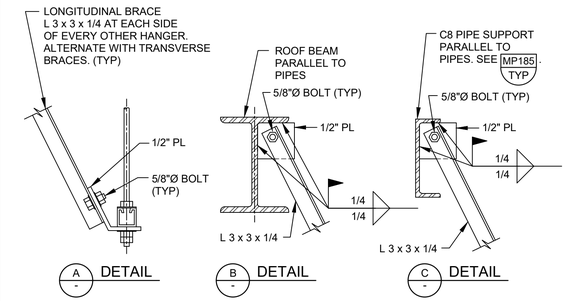

HS184 TYP — DUCT SUPPORT FOR RECTANGULAR/ROUND DUCT - TRAPEZE FROM OVERHEAD

SHEET 2 OF 2 12/18/2023

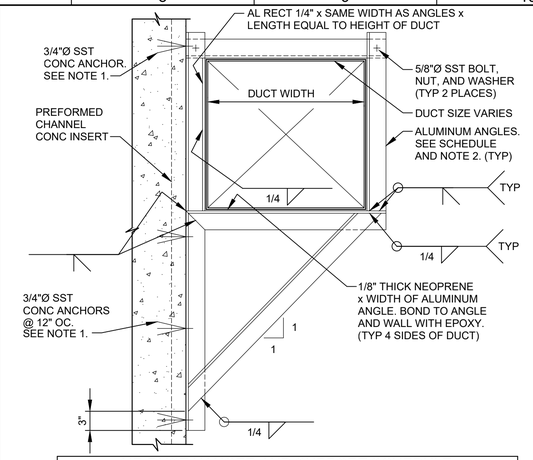

AIR DUCT HANGER AND SUPPORT SCHEDULE		
DUCT WIDTH	ANGLE SIZE	SPACING WHEN NOT INDICATED ON THE DRAWINGS
LESS THAN 18"	L 2 x 2 x 0.250	8'-0" OC MAX
18" THRU 40"	L 2 1/2 x 2 1/2 x 0.375	8'-0" OC MAX
GREATER THAN 40"	L 3 x 3 x 0.375	4'-0" OC MAX

NOTES:

1. WHERE PREFORMED CHANNEL CONC INSERTS ARE PROVIDED IN CONC WALLS, ATTACH SUPPORT TO INSERTS IN LIEU OF USING CONCRETE ANCHORS.
2. DUCT WIDTH SHALL BE THE LONG DIMENSIONS OF RECTANGULAR DUCT OR THE OUTSIDE DIAMETER OF ROUND DUCT.

HS378 TYP — DUCT SUPPORT FOR HORIZONTAL RECTANGULAR/ ROUND DUCT - WALL BRACKET BELOW

SHEET 1 OF 4 12/18/2023

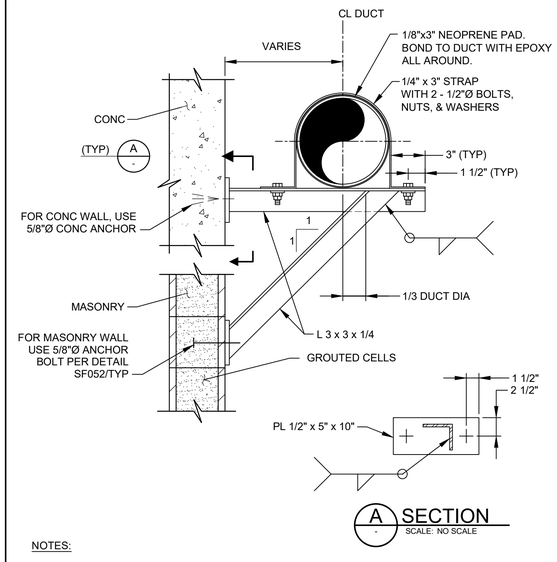

NOTES:

1. ALL METAL SHAPES SHALL BE TYPE 304 SST UNLESS OTHERWISE INDICATED ON THE DRAWINGS.
2. ALL BOLTS, NUTS, WASHERS, AND CONNECTIONS SHALL BE TYPE 304 SST.
3. SEE DRAWINGS FOR THE SIZE OF DUCT.

HS378 TYP — DUCT SUPPORT FOR HORIZONTAL RECTANGULAR/ ROUND DUCT - WALL BRACKET BELOW

SHEET 2 OF 4 5/05/25

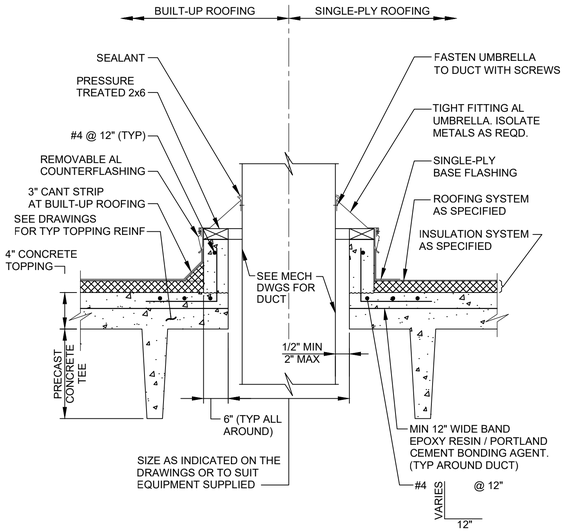

NOTE:

1. TOP OF CURB SHALL BE LEVEL. VARY HEIGHT OF SIDES OF CURB TO COMPENSATE FOR ROOF SLOPE.

HT150 TYP — PENETRATION - RECTANGULAR DUCT THROUGH PRECAST CONCRETE TEE ROOF

08/21/18

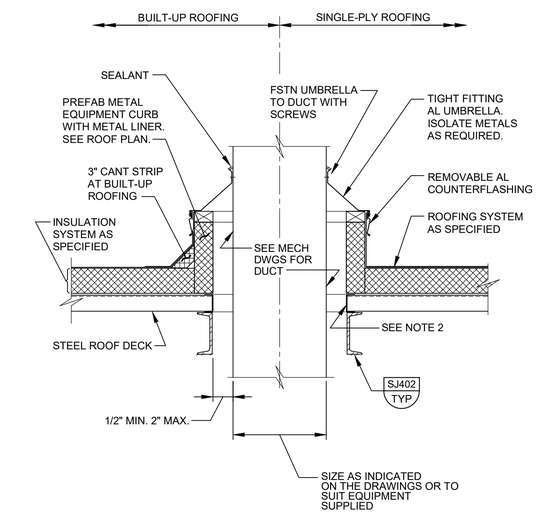

NOTES:

1. TOP OF CURB SHALL BE LEVEL. VARY HEIGHT OF SIDES OF CURB TO COMPENSATE FOR ROOF SLOPE.
2. PROVIDE SHEET METAL "C" SHAPED CLOSURE AROUND DECK. (TYP 4 SIDES)

HT180 TYP — PENETRATION - RECTANGULAR DUCT THROUGH METAL ROOF

12/18/2023

REV	DATE	BY	DESCRIPTION
			BID SET

DESIGNED CE
DRAWN CE
CHECKED CAG
DATE MAY 2026

COLORADO LICENSED — CRAIG A. GARCIA — 0050567 — PROFESSIONAL ENGINEER — Digitally signed by Craig A. Garcia, Carollo Engineers, Inc. Date: 2025.05.06 14:48:45 -06'00'

carollo®

THORNTON WATER PROJECT

CITY OF THORNTON - THORNTON WATER PROJECT

CHEMICAL BUILDING AND PRV VAULTS

HVAC

TYPICAL DETAIL - 3

VERIFY SCALES
BAR IS ONE INCH ON ORIGINAL DRAWING
0 — 1"
IF NOT ONE INCH ON THIS SHEET, ADJUST SCALES ACCORDINGLY

JOB NO. 204403
DRAWING NO. 00TH03
SHEET NO. 150 OF 168

LAST SAVED BY: chernandez

PROJECT NO.:204403-100000 FILE NAME: 204403_00TH03.dwg

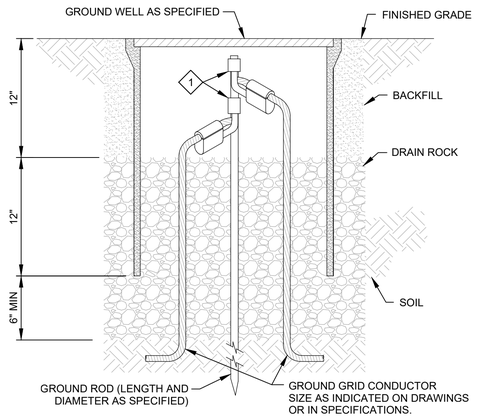

KEY NOTES:

1. GROUND ROD TO GROUND GRID CROSS CONNECTOR. SIZE FOR ROD AND CABLE PER CONNECTOR MANUFACTURERS GUIDELINES.

EG001 TYP — GROUND ROD AND GROUNDWELL COMPRESSION CONNECTION

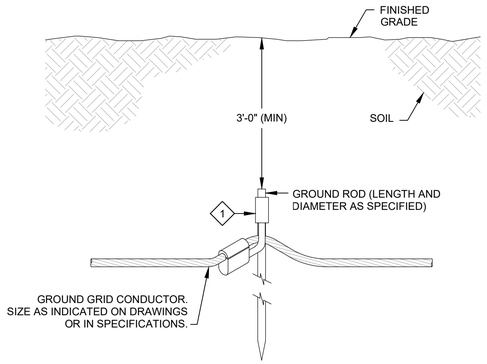

KEY NOTES:

1. GROUND ROD TO GROUND GRID CROSS CONNECTOR. SIZE FOR ROD AND CABLE PER CONNECTOR MANUFACTURERS GUIDELINES.

EG002 TYP — GROUND ROD COMPRESSION CONNECTION

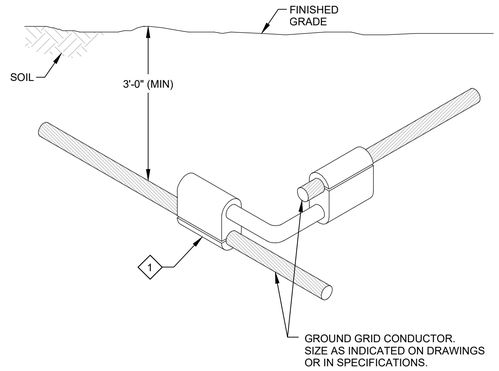

KEY NOTES:

1. GROUND GRID CROSS CONNECTOR. SIZE FOR CABLE PER CONNECTOR MANUFACTURERS GUIDELINES.

EG101 TYP — COPPER GROUNDING CABLE CONNECTION COMPRESSION CONNECTION

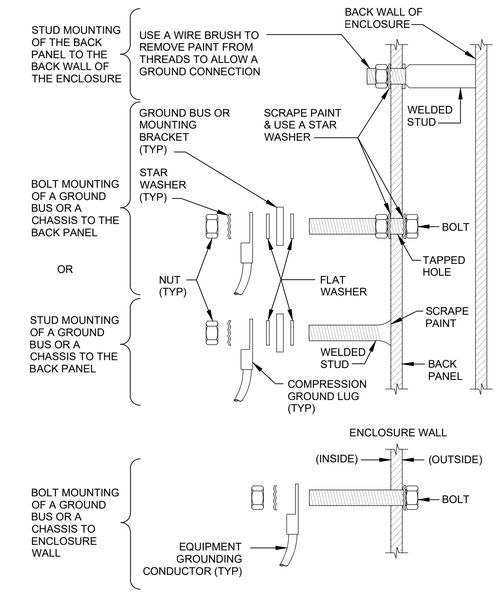

EG205 TYP — ENCLOSURE GROUNDING DETAILS

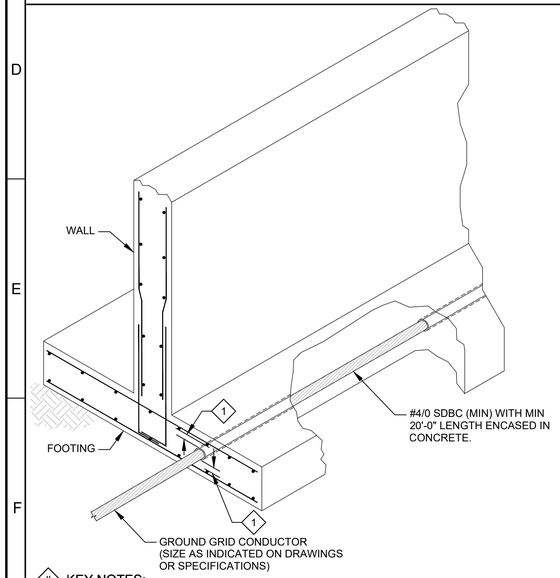

KEY NOTES:

1. GROUND GRID CONDUCTOR TO BE FULLY ENCASED IN CONCRETE. PROVIDE MIN 1 1/2" CLEAR BETWEEN CONDUCTOR & REINFORCING BARS, OR BETWEEN CONDUCTOR AND FACE OF CONCRETE.

EG304 TYP — GROUNDING CONNECTION TO FOOTING (UFER)

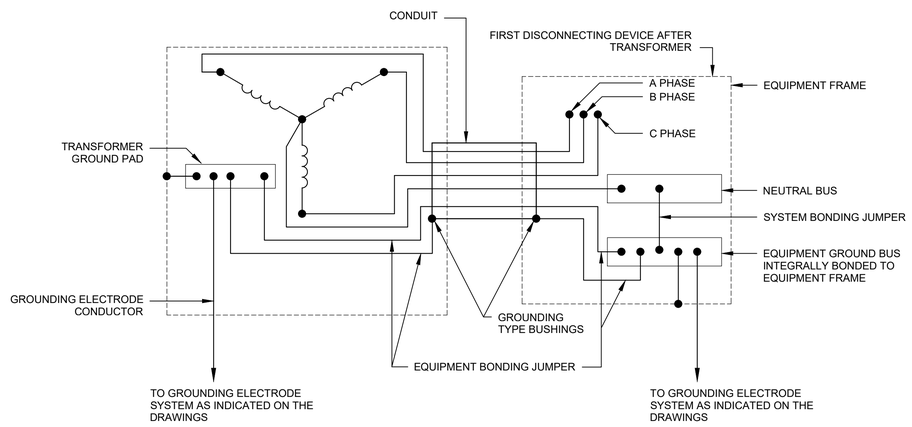

EG511 TYP — TRANSFORMER (NON-UTILITY) 3-PHASE, 4-WIRE SECONDARY POWER GROUNDING DETAIL

REV	DATE	BY	DESCRIPTION
			BID SET

DESIGNED CE
DRAWN CE
CHECKED CE
DATE MAY 2026

COLORADO LICENSED — 55107 — ALLEN GROSS — Digitally signed by Kristen W Carollo Engineer — Date: 2026.05.08 14:32:14 -06'00' — PROFESSIONAL ENGINEER

CITY OF THORNTON - THORNTON WATER PROJECT

CHEMICAL BUILDING AND PRV VAULTS

ELECTRICAL

TYPICAL DETAIL - 1

VERIFY SCALES
BAR IS ONE INCH ON ORIGINAL DRAWING
0 1"
IF NOT ONE INCH ON THIS SHEET, ADJUST SCALES ACCORDINGLY

JOB NO. 204403
DRAWING NO. 00TE01
SHEET NO. 151 OF 168

LAST SAVED BY: GHerrera

PROJECT NO. 204403-100000 FILE NAME: 204403_00TE01.dwg

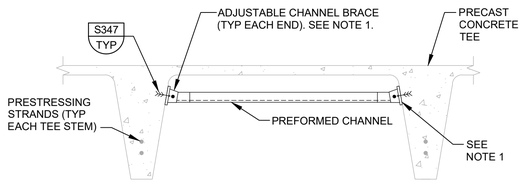

BETWEEN

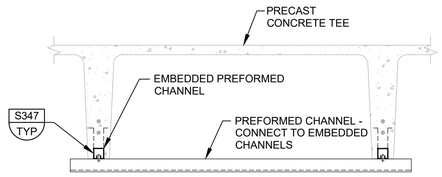

BELOW

GENERAL NOTES:

1. FASTEN ADJUSTABLE CHANNEL BRACES TO TEE. SEE STRUCTURAL TYPICAL DETAIL FOR CONNECTION LOCATION.

EA010 TYP ATTACHMENT TO PRECAST TEES

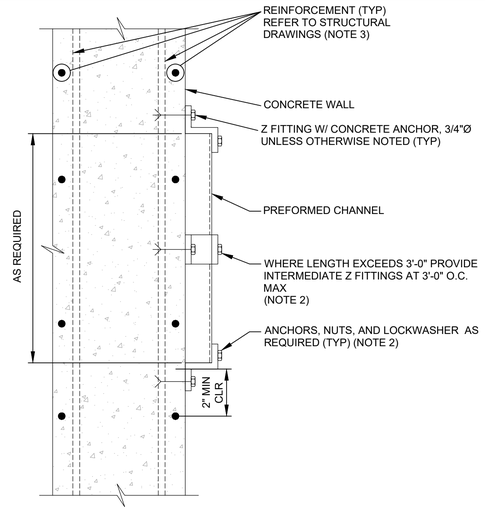

GENERAL NOTES:

1. THIS DETAIL TYPICAL FOR BOTH VERTICAL AND HORIZONTAL MOUNTING.
2. SUPPORTS TO BE SPACED IN ACCORDANCE WITH NEC REQUIREMENTS. CONCRETE ANCHORS SHALL BE PER THE SPECIFICATIONS.
3. REFER TO STRUCTURAL DRAWINGS FOR ORIENTATION OF REINFORCEMENT AND BARS.

EA070 TYP PREFORMED CHANNEL ATTACHMENT TO CONCRETE WALL

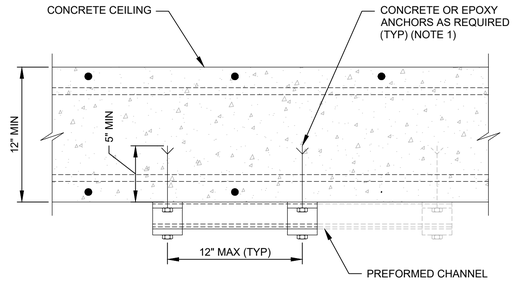

GENERAL NOTES:

1. A FOOT UNISTRUT SUPPORT WITH TWO CONCRETE OR EPOXY ANCHORS 12" APART IS RATED FOR 500 LBS.
2. EACH EXTENSION WITH ADDITIONAL ANCHORS AT 12" INCREMENTS INCREASES THE LOADING CAPACITY BY 500 LBS.
3. SUBMIT ANCHORAGE CALCULATIONS WHEN LOAD EXCEEDS 500 LBS. REFER TO THE SPECIFICATIONS.

EA075 TYP PREFORMED CHANNEL ATTACHMENT TO CONCRETE CEILING

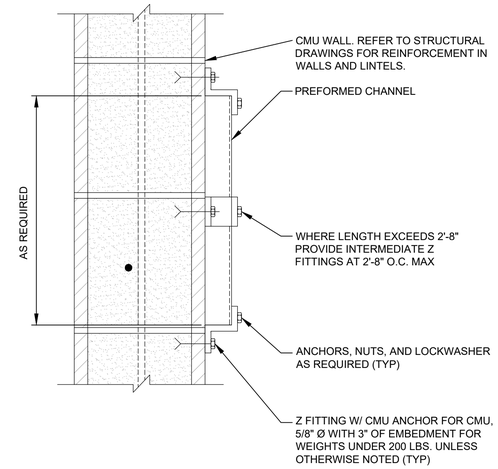

GENERAL NOTES:

1. THIS DETAIL TYPICAL FOR BOTH VERTICAL AND HORIZONTAL MOUNTING.
2. SUPPORTS TO BE SPACED IN ACCORDANCE WITH NEC REQUIREMENTS. CONCRETE ANCHORS SHALL BE PER THE SPECIFICATIONS.

EA080 TYP N PREFORMED CHANNEL ATTACHMENT TO FULLY GROUTED CMU WALL

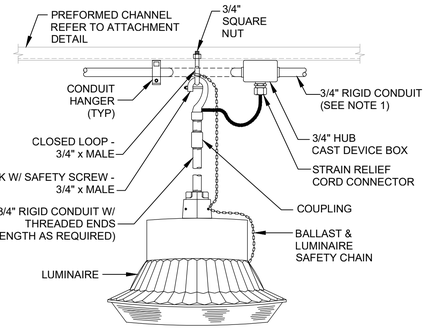

GENERAL NOTES:

1. AT LUMINAIRE ATTACHMENT, PROVIDE CONDUIT BEND AROUND LUMINAIRE CLOSED LOOP ASSEMBLY.

EL100 TYP PENDANT LUMINAIRE MOUNTING

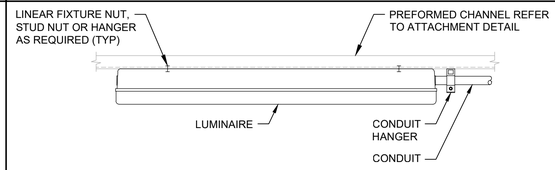

FLUSH MOUNTED

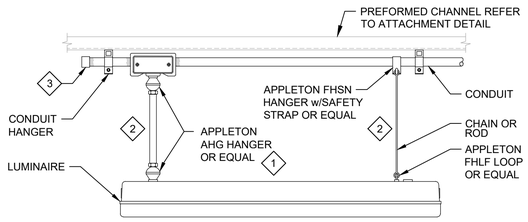

SUSPENDED

KEY NOTES:

1. USE MEYERS HUB IN WET AND/OR CORROSIVE AREAS.
2. LENGTH AS REQUIRED FOR INDICATED MOUNTING HEIGHT.
3. CAP END CONDUIT AS REQUIRED.

EL200 TYP LINEAR LUMINAIRE MOUNTING

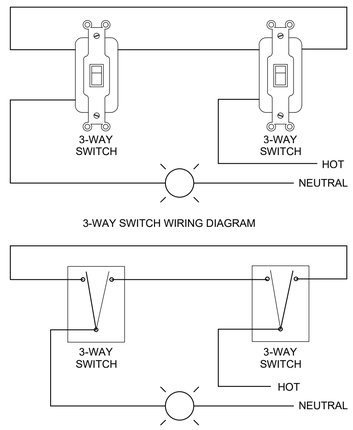

3-WAY SWITCH WIRING DIAGRAM

EL700 TYP 3-WAY SWITCH ONE-LINE DIAGRAM

REV	DATE	BY	DESCRIPTION
			BID SET

DESIGNED CE
DRAWN CE
CHECKED CE
DATE MAY 2026

COLORADO LICENSED
ALLEN CAROLLO
55107
Digitally signed by Kristen M Carollo
Contact Info: Carollo Engineering
Date: 2026.05.08 14:32:38 -06'00'
PROFESSIONAL ENGINEER

CITY OF THORNTON - THORNTON WATER PROJECT
CHEMICAL BUILDING AND PRV VAULTS
ELECTRICAL
TYPICAL DETAIL - 2

VERIFY SCALES
BAR IS ONE INCH ON ORIGINAL DRAWING
0 1"
IF NOT ONE INCH ON THIS SHEET, ADJUST SCALES ACCORDINGLY

JOB NO. 204403
DRAWING NO. 00TE02
SHEET NO. 152 OF 168

LAST SAVED BY: GHerrera

PROJECT NO. 204403-100000 FILE NAME: 204403_00TE02.dwg

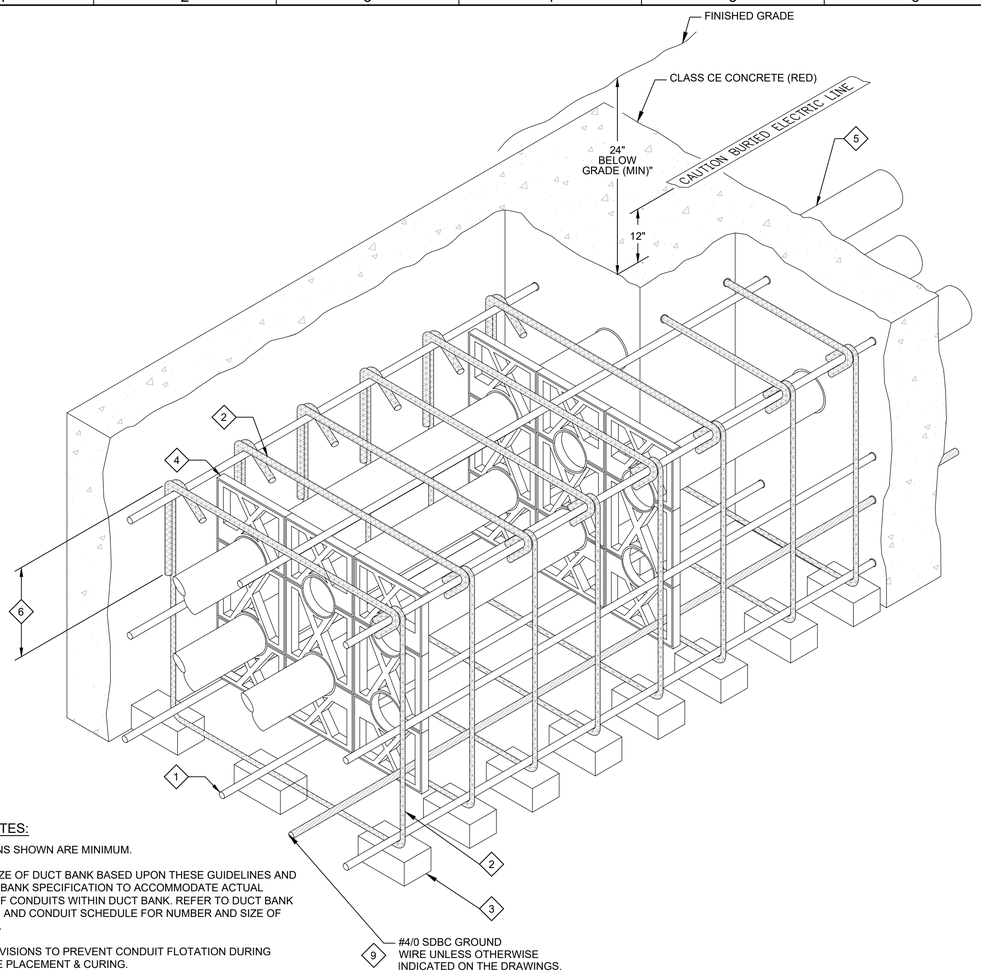

GENERAL NOTES:

1. DIMENSIONS SHOWN ARE MINIMUM.
2. ADJUST SIZE OF DUCT BANK BASED UPON THESE GUIDELINES AND THE DUCT BANK SPECIFICATION TO ACCOMMODATE ACTUAL NUMBER OF CONDUITS WITHIN DUCT BANK. REFER TO DUCT BANK SECTIONS, AND CONDUIT SCHEDULE FOR NUMBER AND SIZE OF CONDUITS.
3. MAKE PROVISIONS TO PREVENT CONDUIT FLOTATION DURING CONCRETE PLACEMENT & CURING.

KEY NOTES:

1. #4 REINFORCING STEEL 12" MAXIMUM ON CENTER AROUND ENTIRE PERIMETER OF DUCT BANK.
2. #4 REINFORCING STEEL TIES MAXIMUM 24" ON CENTER ALONG LENGTH OF DUCT BANK.
3. MINIMUM OF TWO PRECAST CONCRETE BAR SUPPORTS PLACED UNDER A TIE AT EACH PVC CONDUIT SPACER ALONG LENGTH OF DUCT BANK. PROVIDE PRECAST BAR SUPPORTS AT INTERVALS OF 24" TO REDUCE DEFLECTION.
4. PVC CONDUIT SPACERS ON 8'-0" CENTERS (MAXIMUM). LOCATE 12" FROM TIES.
5. REFER TO DUCT BANK SECTIONS AND SPECIFICATIONS FOR CONDUIT REQUIREMENTS.
6. 1'-4" OR 135 DEGREE HOOK FOR SHALLOW DUCT BANKS SHALLOWER THAN 21"
7. CONTRACTOR'S OPTION TO PROVIDE 1'-4" LAP LENGTH EACH SIDE OF HORIZONTAL TIE.
8. LOWER PORTION OF TIES COULD BE U-BARS IF UPPER PORTIONS PROVIDES 1'-4" VERTICAL LEGS EACH SIDE.
9. BOND THE DUCT BANK GROUND WIRE TO THE GROUNDING SYSTEM AT BOTH ENDS OF THE DUCT BANK.

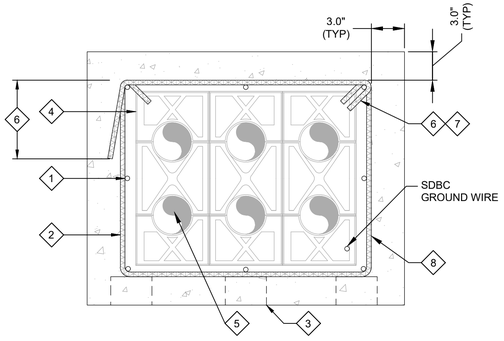

EM001 TYP — REINFORCED CONCRETE DUCT BANK

N

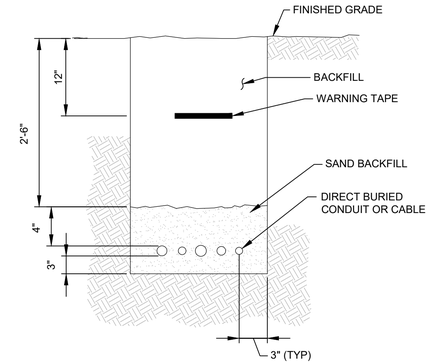

GENERAL NOTES:

1. ALL DIMENSIONS ARE MINIMUM UNLESS OTHERWISE INDICATED ON THE DRAWINGS.
2. REFER TO THE SPECIFICATIONS FOR TRENCH BACKFILL REQUIREMENTS.

EM015 TYP — DIRECT BURIED CONDUIT OR CABLE

N

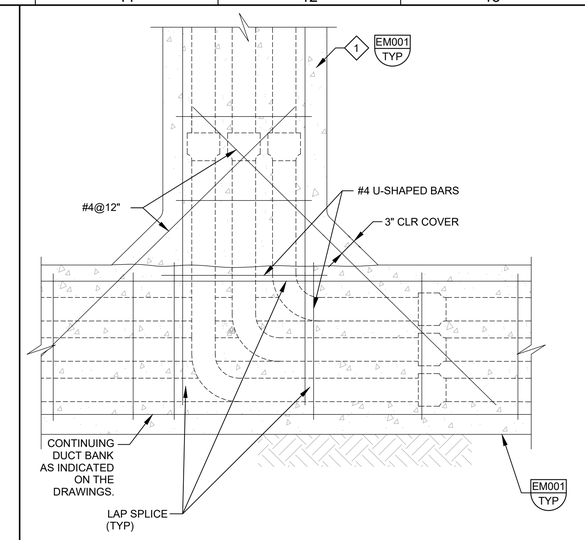

GENERAL NOTES:

1. REFER TO THE SPECIFICATIONS FOR MATERIAL REQUIREMENTS.

KEY NOTES:

1. ADJUST DUCT SPACING TO FIT OPENING IN THE SLAB AND EQUIPMENT ABOVE.

EM020 TYP — DUCT BANK RISER

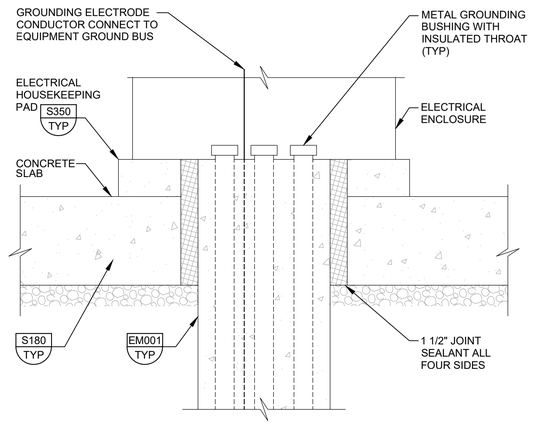

GENERAL NOTES:

1. OPENING SIZE IN CONCRETE HOUSE KEEPING PAD IS SET BY CONDUIT SIZE AND NUMBER OF CONDUITS. CONDUITS AT TOP OF HOUSE KEEPING PAD MUST FIT IN MANUFACTURER PROVIDED WINDOW IN BOTTOM OF ELECTRICAL ENCLOSURE.

EM022 TYP — DUCT BANK ENTRY INTO ELECTRICAL EQUIPMENT

J

11-11-25

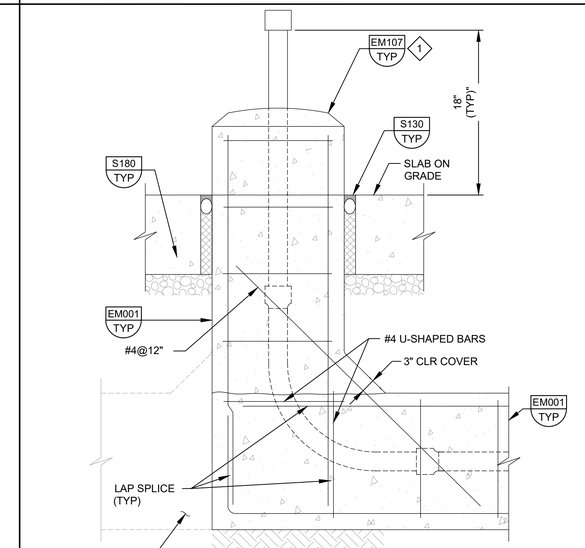

GENERAL NOTES:

1. REFER TO THE SPECIFICATIONS FOR MATERIAL REQUIREMENTS.

KEY NOTES:

1. PROVIDE CONDUIT HOUSE KEEPING CURB AT ALL LOCATIONS WHERE THE CONDUIT IS NOT PROTECTED BY AN EQUIPMENT PAD.

EM032 TYP — DUCT BANK RISER THROUGH SLAB ON GRADE

J

11-11-25

REV	DATE	BY	DESCRIPTION
			BID SET

DESIGNED CE
DRAWN CE
CHECKED CE
DATE MAY 2026

COLORADO LICENSED — AILEEN GARCIA — 55107 — Registered Agent for Matters of Carollo — Contact Info: Carollo Engineers, Inc., 4220 Oil St. LA ESTANCIA — Original Signature — PROFESSIONAL ENGINEER

carollo®

THORNTON WATER PROJECT

CITY OF THORNTON - THORNTON WATER PROJECT

CHEMICAL BUILDING AND PRV VAULTS

ELECTRICAL

TYPICAL DETAIL - 3

VERIFY SCALES
BAR IS ONE INCH ON ORIGINAL DRAWING
0 1"
IF NOT ONE INCH ON THIS SHEET, ADJUST SCALES ACCORDINGLY

JOB NO. 204403
DRAWING NO. 00TE03
SHEET NO. 153 OF 168

LAST SAVED BY: GHerrera

PROJECT NO. 204403-100000 FILE NAME: 204403_00TE03.dwg

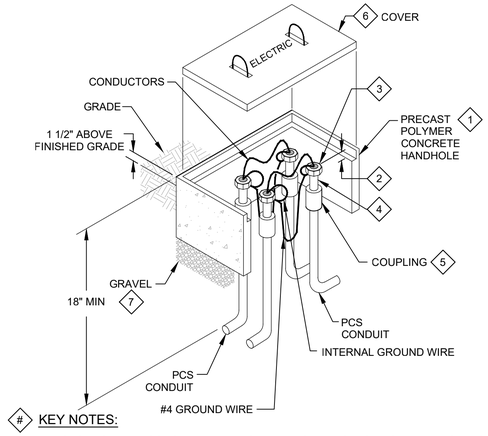

KEY NOTES:

1. PRECAST POLYMER CONCRETE HANDHOLE WITH OPEN BOTTOM FOR DRAINAGE. DO NOT INSTALL POLYMER CONCRETE HANDHOLES IN ROADWAYS.
2. ALLOW SUFFICIENT SPACE BETWEEN THE CONDUIT AND HANDHOLE LID FOR BENDING RADIUS OF WIRES AND CABLES.
3. INSULATED GROUNDING BUSHINGS. BOND BUSHINGS TO EACH OTHER WITH #4 WIRE AND TO GROUND CONDUCTORS IN EACH CONDUIT.
4. NIPPLE (USED TO COMPACT DUCT SEAL IN COUPLING).
5. PACK COUPLING AREA WITH DUCT SEAL BY MANVILLE OR APPROVED EQUAL.
6. PROVIDE "TIER"-RATED COVER PER MANHOLE AND HANDHOLE SCHEDULE.
7. GRAVEL BED FOR LEVELING & DRAINAGE. MINIMUM 12" DEEP & EXTENDING AT LEAST 6" EACH WAY PAST OUTSIDE LIMITS OF HANDHOLE.

EM052 TYP — ELECTRICAL HANDHOLE: PRECAST POLYMER CONCRETE

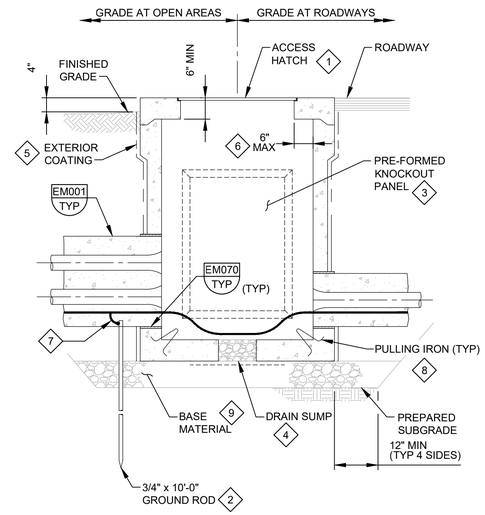

EM056 TYP — ELECTRICAL HANDHOLE PRECAST CONCRETE W/HATCH

N 12/23/24

GENERAL NOTES:

1. PROVIDE MINIMUM INTERIOR DIMENSIONS AS SHOWN IN THE ELECTRICAL HANDHOLE AND MANHOLE SCHEDULE.
2. BOND ALL METALLIC ITEMS INSIDE HANDHOLE TO GROUND ROD USING #4 AWG BARE COPPER CABLE.
3. SEE DRAWINGS FOR ORIENTATION, NUMBER, AND SIZE OF DUCT BANKS AT EACH HANDHOLE.

KEY NOTES:

1. SEE THE MANHOLE AND HANDHOLE SCHEDULE FOR REQUIRED LOAD RATING OF HATCH.
2. BOND DUCT BANK GROUND CABLE TO GROUND ROD. REFER TO THE SPECIFICATIONS FOR CONNECTION REQUIREMENTS.
3. INSTALL DUCT BANKS ONLY THROUGH CAST-IN OPENINGS OR PREFORMED KNOCKOUT PANELS. PROVIDE KNOCKOUTS ON EACH WALL AROUND HANDHOLE.
4. PROVIDE MINIMUM 4 INCH DIAMETER, GRAVEL FILLED PENETRATION THROUGH FLOOR OF HANDHOLE. SET SUMP OPENING OVER MINIMUM 18" SQUARE FILTER FABRIC TO ISOLATE GRAVEL FROM BASE MATERIAL BELOW.
5. COAT EXTERIOR WALLS BELOW GRADE WITH BITUMINOUS DAMP PROOFING.
6. MAXIMUM TOP SLAB OVERHANG IS TYPICAL AROUND 4 SIDES OF HANDHOLE.
7. GROUNDING CABLE CONNECTION. REFER TO THE SPECIFICATIONS FOR CONNECTION REQUIREMENTS.
8. PROVIDE ONE PULLING IRON ON EACH WALL OF HANDHOLE.
9. BASE MATERIAL: PROVIDE MIN 12" COMPACTED AGGREGATE BASE COURSE.

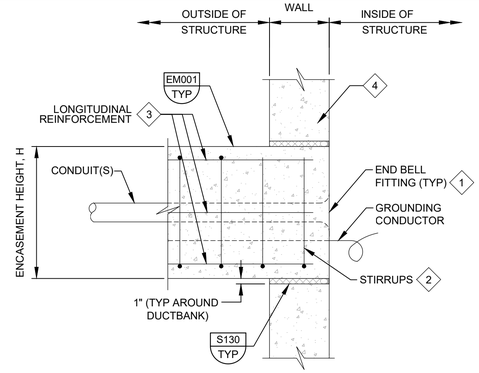

KEY NOTES:

1. PROVIDE GROUNDING FITTING FOR METALLIC CONDUITS ENTERING MANHOLE. BOND GROUNDING FITTING TO DUCTBANK GROUNDING CONDUCTOR.
2. FOR FIRST 12'-0" FROM INSIDE FACE OF STRUCTURE, STIRRUP SPACING IN INCHES = (H-4)/2 WHERE H = CONCRETE ENCASEMENT HEIGHT IN INCHES.
3. ADDITIONAL #4 x 12'-0" @ 12" ON ALL FOUR FACES OF ENCASEMENT. ALTERNATE WITH TYPICAL REINFORCEMENT FOR 6" SPACING.
4. PROVIDE ADDITIONAL REINFORCEMENT AROUND OPENING AS REQUIRED. FOR CASTIN-PLACE STRUCTURES, PROVIDE REINFORCEMENT PER S180 TYP

EM070 TYP — ENCASED CONDUITS AT MANHOLES OR STRUCTURES - W/O WATERSTOP

J 11-11-25

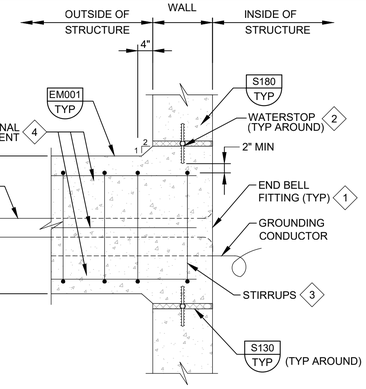

KEY NOTES:

1. PROVIDE GROUNDING FITTING FOR METALLIC CONDUITS ENTERING MANHOLE. BOND GROUNDING FITTING TO DUCTBANK GROUNDING CONDUCTOR.
2. 6" PVC CENTERBULB WATERSTOP TYPICAL AROUND PERIMETER OF ENCASEMENT.
3. FOR FIRST 12'-0" FROM INSIDE FACE OF STRUCTURE, STIRRUP SPACING, IN INCHES = (H-4)/2, WHERE H = CONCRETE ENCASEMENT HEIGHT IN INCHES.
4. ADDITIONAL #4 x 12'-0" @ 12" ON ALL FOUR FACES OF ENCASEMENT. ALTERNATE WITH TYPICAL REINFORCEMENT FOR 6" SPACING.

EM071 TYP — ENCASED CONDUITS AT MANHOLES OR STRUCTURES - WITH WATERSTOP

J 11-11-25

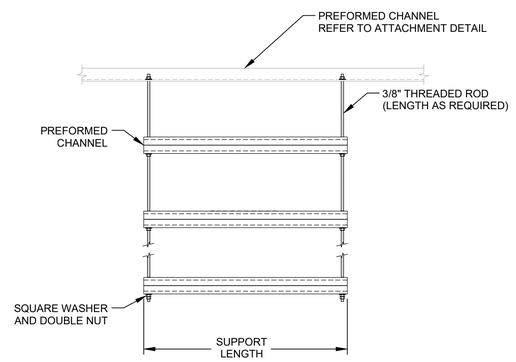

GENERAL NOTES:

1. PROVIDE NUMBER AND LENGTH OF PREFORMED CHANNEL SUPPORTS AS REQUIRED BY EQUIPMENT AND MATERIALS TO BE INSTALLED.
2. PROVIDE SEISMIC BRACING PER THE SPECIFICATIONS.
3. REFER TO SPECIFICATIONS FOR MATERIAL REQUIREMENTS.

EM102 TYP — TRAPEZE SUPPORT

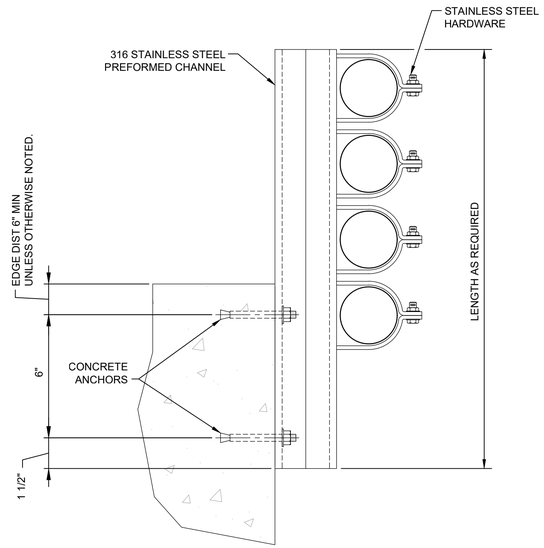

EM103 TYP — CONDUIT SUPPORT

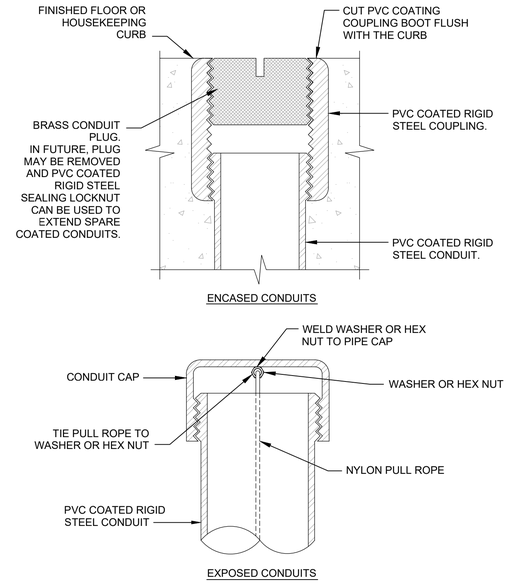

GENERAL NOTES:

1. PROVIDE 2" MIN CLEAR BETWEEN ADJACENT CONDUITS

EM105 TYP — SPARE CONDUIT DETAIL

N

REV	DATE	BY	DESCRIPTION
			BID SET

DESIGNED CE
DRAWN CE
CHECKED CE
DATE MAY 2026

COLORADO LICENSED — 65107 — ERIC GROSS — PROFESSIONAL ENGINEER

CITY OF THORNTON - THORNTON WATER PROJECT
CHEMICAL BUILDING AND PRV VAULTS
ELECTRICAL
TYPICAL DETAIL - 4

VERIFY SCALES
BAR IS ONE INCH ON ORIGINAL DRAWING
0 1"
IF NOT ONE INCH ON THIS SHEET, ADJUST SCALES ACCORDINGLY

JOB NO. 204403
DRAWING NO. 00TE04
SHEET NO. 154 OF 168

LAST SAVED BY: Gherrera

PROJECT NO. 204403-100000 FILE NAME: 204403_00TE04.dwg

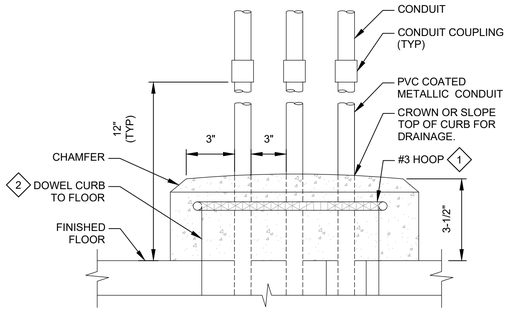

GENERAL NOTES:

1. PROVIDE THE HOUSEKEEPING CURB FOR ALL CONDUITS EITHER LEAVING OR PENETRATING THROUGH THE SLAB.
2. REFER TO THE SPECIFICATIONS FOR MATERIAL REQUIREMENTS.

KEY NOTES:

1. TYPICAL BOTH SIDES, FRONT AND REAR.
2. COORDINATE REINFORCING STEEL REQUIREMENTS WITH THE CONTRACTOR.

EM107 TYP — CONDUIT HOUSEKEEPING CURB

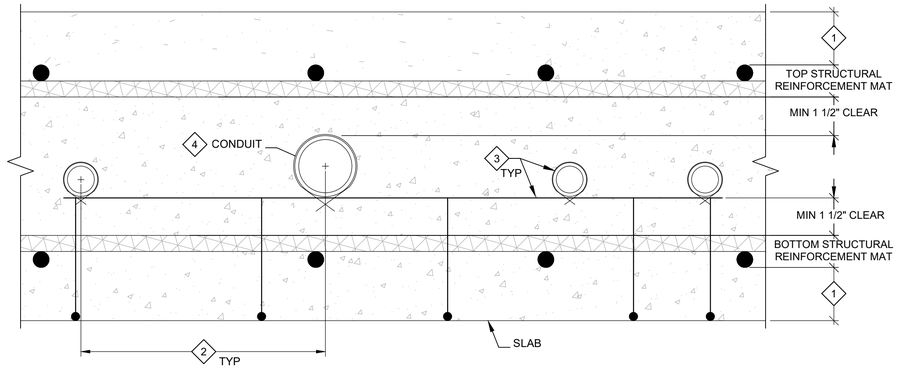

GENERAL NOTES:

1. MOVE CONDUITS TO AVOID CONFLICTS WITH WATERSTOPS. WHERE HORIZONTAL AND VERTICAL CLEARANCES CANNOT BE MAINTAINED, CONTACT ENGINEER FOR INSTRUCTION'S BEFORE PLACING CONCRETE.

KEY NOTES:

1. FOR REQUIRED TOP AND BOTTOM COVER OVER REINFORCEMENT SEE TYPICAL DETAIL S101.
2. MINIMUM ON CENTER HORIZONTAL SPACING OF PARALLEL CONDUITS = 4X OUTSIDE DIAMETER OF THE LARGER CONDUIT.
3. SUPPORT CONDUITS ON ADDED REINFORCEMENT CHAIRS OR BOLSTERS. TIE CONDUITS TO SUPPORTS AND ANCHOR TO PREVENT FLOTATION.
4. CENTER LARGEST DIAMETER CONDUIT BETWEEN TOP AND BOTTOM REINFORCEMENT MATS.

EM115 TYP — EMBEDDED CONDUIT IN CONCRETE SLAB SINGLE RUN

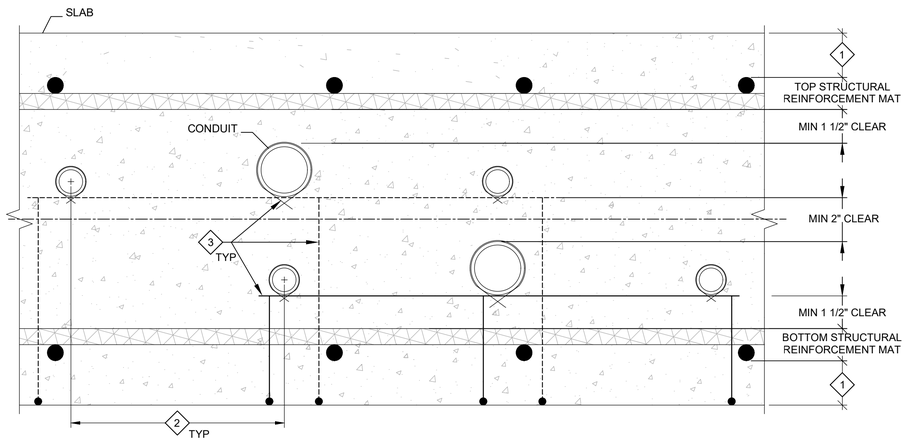

GENERAL NOTES:

1. MOVE CONDUITS TO AVOID CONFLICTS WITH WATERSTOPS. WHERE HORIZONTAL AND VERTICAL CLEARANCES CANNOT BE MAINTAINED, CONTACT ENGINEER FOR INSTRUCTION'S BEFORE PLACING CONCRETE.

KEY NOTES:

1. FOR REQUIRED TOP AND BOTTOM COVER OVER REINFORCEMENT SEE TYPICAL DETAIL S101.
2. MINIMUM ON CENTER HORIZONTAL SPACING OF PARALLEL CONDUITS = 4X OUTSIDE DIAMETER OF THE LARGER CONDUIT.
3. SUPPORT CONDUITS ON ADDED REINFORCEMENT CHAIRS OR BOLSTERS. TIE CONDUITS TO SUPPORTS & ANCHOR TO PREVENT FLOTATION.
4. WHERE MORE THAN 2 RUNS ARE STACKED, PROVIDE HORIZONTAL AND VERTICAL SPACING SHOWN BETWEEN EACH PAIR.

EM116 TYP — EMBEDDED CONDUIT IN CONCRETE SLAB STACKED RUNS

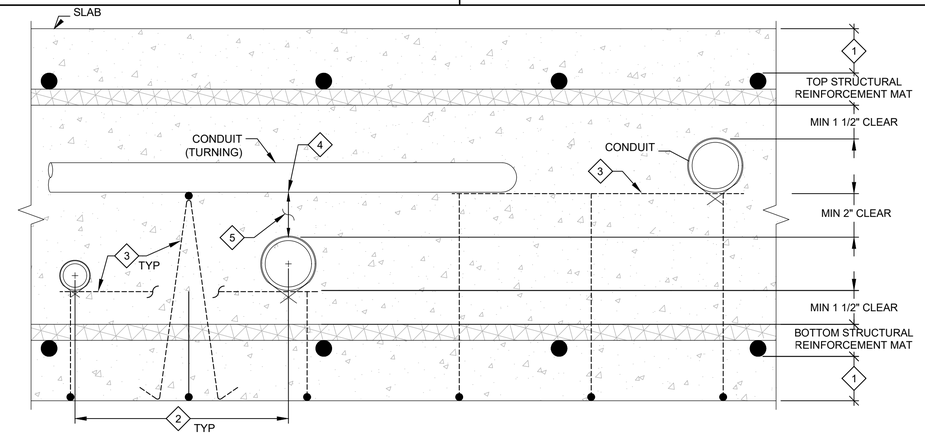

GENERAL NOTES:

1. MOVE CONDUITS TO AVOID CONFLICTS WITH WATERSTOPS. WHERE HORIZONTAL AND VERTICAL CLEARANCES CANNOT BE MAINTAINED, CONTACT ENGINEER FOR INSTRUCTION'S BEFORE PLACING CONCRETE.

KEY NOTES:

1. FOR REQUIRED TOP AND BOTTOM COVER OVER REINFORCEMENT SEE TYPICAL DETAIL S101.
2. MINIMUM ON CENTER HORIZONTAL SPACING OF PARALLEL CONDUITS = 4X OUTSIDE DIAMETER OF THE LARGER CONDUIT.
3. SUPPORT CONDUITS ON ADDED REINFORCEMENT BOLSTERS, OCM METAL BAR SUPPORT PRODUCT TYPE OR EQUAL. TIE CONDUITS TO SUPPORTS AND ANCHOR TO PREVENT FLOTATION.
4. WHERE CONDUITS CROSS, PROVIDE MIN HORIZONTAL SPACING BETWEEN PARALLEL CONDUITS NOT LESS THAN DIAMETER OF THE LARGER CONDUIT IN THE SAME HORIZONTAL PLAN.
5. SUPPORT CONDUITS AT CROSSING TO PREVENT SAG AND MAINTAIN CLEARANCE SHOWN.
6. WHERE MORE THAN 2 RUNS ARE STACKED, PROVIDE HORIZONTAL AND VERTICAL SPACING SHOWN BETWEEN EACH PAIR.

EM117 TYP — EMBEDDED CONDUIT IN CONCRETE SLAB CROSSING RUNS

REV	DATE	BY	DESCRIPTION
			BID SET

DESIGNED CE
DRAWN CE
CHECKED CE
DATE MAY 2026

COLORADO LICENSED — ARLEN GROSS — 55107 — Digitally signed by Arlen W Gross — Date: 2026.05.08 14:57:24 -06'00' — PROFESSIONAL ENGINEER

carollo®

THORNTON WATER PROJECT

CITY OF THORNTON - THORNTON WATER PROJECT
CHEMICAL BUILDING AND PRV VAULTS
ELECTRICAL
TYPICAL DETAIL - 5

VERIFY SCALES
BAR IS ONE INCH ON ORIGINAL DRAWING
0 1"
IF NOT ONE INCH ON THIS SHEET, ADJUST SCALES ACCORDINGLY

JOB NO. 204403
DRAWING NO. 00TE05
SHEET NO. 155 OF 168

LAST SAVED BY: GHerrera

PROJECT NO. 204403-100000 FILE NAME: 204403_00TE05.dwg

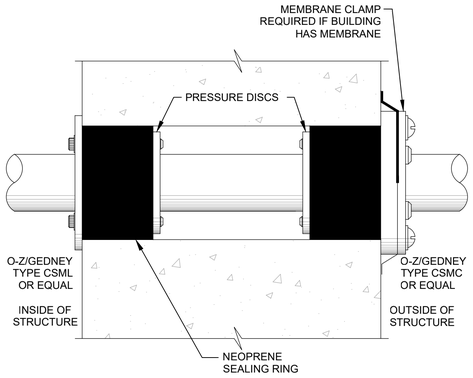

GENERAL NOTES:

1. REFER TO SPECIFICATIONS FOR CORE-DRILLING REQUIREMENTS.

EM133 TYP N — CONDUIT WALL PENETRATION BELOW GRADE

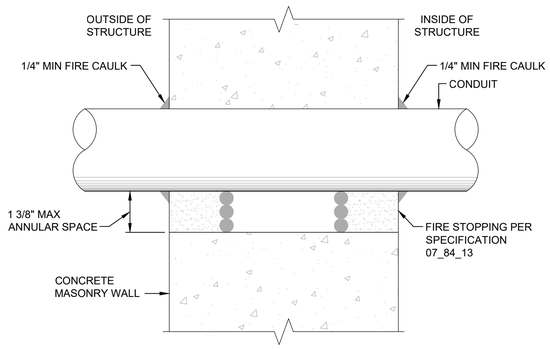

GENERAL NOTES:

1. ROUGHEN SURFACE OF OPENING AND APPLY EPOXY CEMENT BONDING AGENT IMMEDIATELY PRIOR TO GROUTING.

EM148 TYP — CONDUIT PENETRATION FIRE RATED WALL

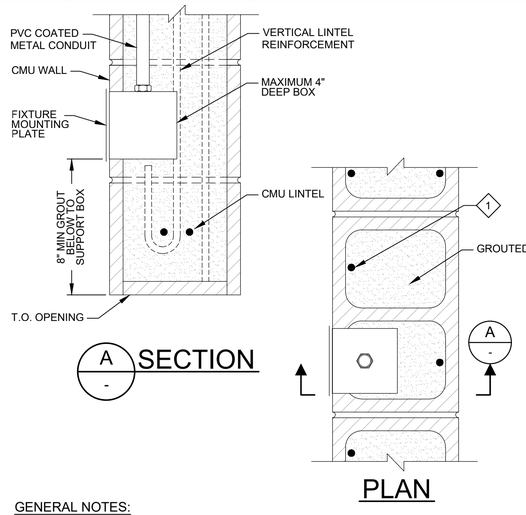

GENERAL NOTES:

1. REFER TO STRUCTURAL DRAWING FOR ADDITIONAL GROUT AND REINFORCEMENT REQUIREMENTS.
2. REFER TO STRUCTURAL DRAWINGS FOR REINFORCEMENT IN WALLS AND LINTELS.

KEY NOTES:

1. DISCONTINUE VERTICAL BAR AT BOX. PROVIDE VERTICAL BARS IN CELLS NEXT TO BOX.

EM171 TYP — ELECTRICAL BOX ABOVE OPENING FULLY GROUTED CMU WALL

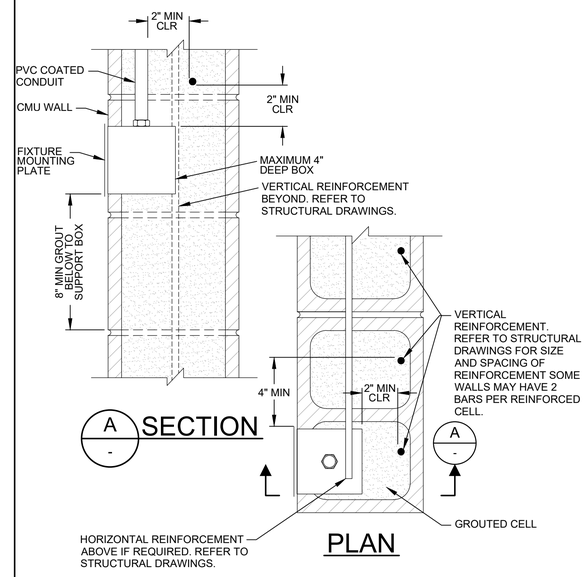

GENERAL NOTES:

1. REFER TO STRUCTURAL DRAWING FOR ADDITIONAL GROUT AND REINFORCEMENT REQUIREMENTS.

EM172 TYP — ELECTRICAL BOX BESIDE OPENING FULLY GROUTED CMU WALL

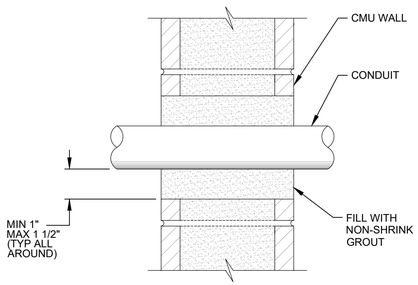

GENERAL NOTES:

1. PROVIDE NON-DESTRUCTIVE TESTING TO DETERMINE LOCATIONS OF REINFORCEMENT. MAINTAIN MIN 2" CLEAR BETWEEN CORE DRILLED OPENING AND REINFORCEMENT.
2. ROUGHEN SURFACE OF OPENING TO A 1/4" AMPLITUDE AND APPLY EPOXY CEMENT BONDING AGENT IMMEDIATELY PRIOR TO GROUTING.
3. PROVIDE 8" MINIMUM CENTER-TO-CENTER SPACING FOR CONDUITS.

EM173 TYP N — CORE HOLE PENETRATION FULLY GROUTED CMU WALL

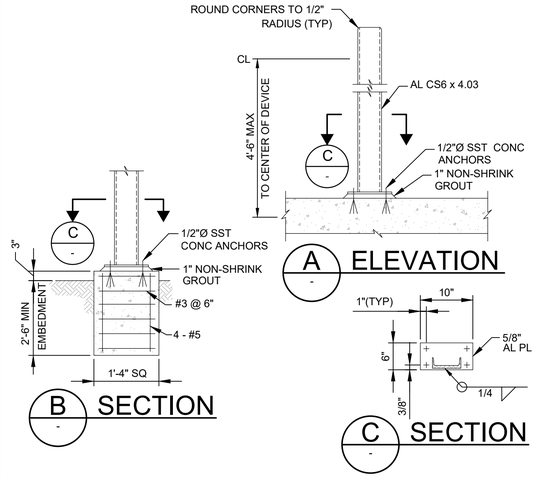

GENERAL NOTES:

1. WHERE SEPARATE FOUNDATION IS REQUIRED, SEE SECTION B.
2. COAT ALUMINUM SURFACES IN CONTACT WITH CONCRETE PER SPECIFICATIONS.
3. USE STAINLESS STEEL FASTENERS FOR MOUNTING DEVICES.
4. WEIGHT OF DEVICE(S) SHALL NOT EXCEED 100 POUNDS.

EM201 TYP — DEVICE SUPPORT AND MOUNTING

REV	DATE	BY	DESCRIPTION
			BID SET

DESIGNED CE
DRAWN CE
CHECKED CE
DATE MAY 2026

COLORADO LICENSED — KAILEN W. GROSS — 55107 — digitally signed by Kailen W Gross — Date: 2026.05.04 14:51:49 -06'00' — PROFESSIONAL ENGINEER

carollo

THORNTON WATER PROJECT

CITY OF THORNTON - THORNTON WATER PROJECT
CHEMICAL BUILDING AND PRV VAULTS
ELECTRICAL
TYPICAL DETAIL - 6

VERIFY SCALES
BAR IS ONE INCH ON ORIGINAL DRAWING
0 1"
IF NOT ONE INCH ON THIS SHEET, ADJUST SCALES ACCORDINGLY

JOB NO. 204403
DRAWING NO. 00TE06
SHEET NO. 156 OF 168

LAST SAVED BY: GHerrera

PROJECT NO. 204403-100000 FILE NAME: 204403_00TE06.dwg

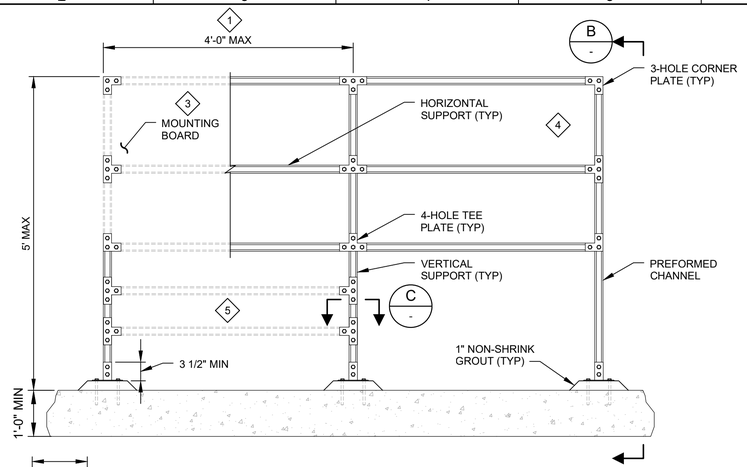

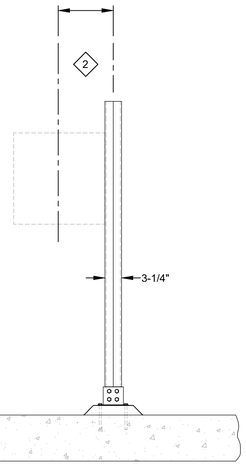

B SECTION

GENERAL NOTES:

1. AS SHOWN, THE MOUNTING STAND IS SUITABLE FOR THE FOLLOWING DESIGN CRITERIA.
   - STAINLESS STEEL OR HOT-DIPPED GALVANIZED PREFORMED CHANNEL
   - BASIC WIND SPEED (3 SECOND GUST. 33 FEET ABOVE GROUND) : 120 MPH
   - WIND EXPOSURE CATEGORY: C
   - NON -SPECIAL WIND REGIONS
   - SEISMIC DESIGN CATEGORY: A THROUGH D
   - RISK CATEGORY: III AND IV
   - MAXIMUM EQUIPMENT LOAD OF 100 LBS PER VERTICAL SUPPORT

   SUBMIT DESIGN CALCULATIONS FOR EACH INSTALLATION THAT EXCEEDS THE SPECIFIED DESIGN CRITERIA OR DIMENSIONAL LIMITATIONS IN THIS DETAIL. REFER TO THE SPECIFICATIONS FOR DESIGN CALCULATION SUBMITTAL REQUIREMENTS.
2. THE TOTAL SURFACE AREA OF ALL EQUIPMENT AND MOUNTING BOARDS SHALL NOT EXCEED 12 SQUARE FEET PER VERTICAL SUPPORT.
3. REFER TO THE SPECIFICATIONS FOR MATERIAL REQUIREMENTS.
4. WHERE CONCRETE ANCHORS COME IN CONTACT WITH DISSIMILAR METALS, ISOLATE DISSIMILAR METALS AS SPECIFIED IN THE SPECIFICATIONS.
5. VERTICAL SUPPORTS SHALL CONSIST OF PREFORMED DOUBLE CHANNELS. HORIZONTAL SUPPORTS SHALL CONSIST OF PREFORMED SINGLE CHANNELS.

EM211 TYP — OUTDOOR EQUIPMENT MOUNTING STAND

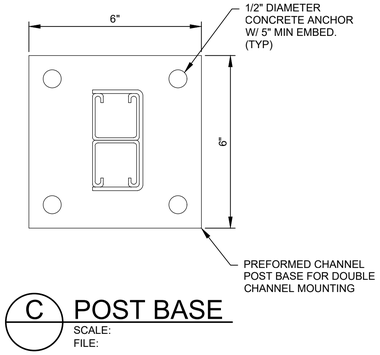

C POST BASE
SCALE:
FILE:

KEY NOTES:

1. FOR MOUNTING STANDS WIDER THAN 4 FEET PROVIDE EQUALLY SPACED VERTICAL SUPPORTS AT 4 FOOT MAXIMUM SPACING.
2. MAXIMUM OFFSET TO THE CENTERLINE OF EQUIPMENT OR ENCLOSURES IS 1'-6".
3. PROVIDE A MOUNTING BOARD FOR INSTRUMENTS AND DEVICES WEIGHING LESS THAN 20 POUNDS THAT CANNOT BE MOUNTED DIRECTLY TO PREFORMED CHANNEL. EQUIPMENT ANCHORAGE TO THE MOUNTING BOARD SHALL BE DESIGNED BY THE CONTRACTOR.
4. PROVIDE ADDITIONAL PREFORMED CHANNEL SUPPORTS FOR ENCLOSURES THAT CAN BE MOUNTED DIRECTLY TO THE PREFORMED CHANNEL.
5. OPTIONAL HORIZONTAL SUPPORTS AND AVAILABLE SPACE FOR JUNCTION BOXES.

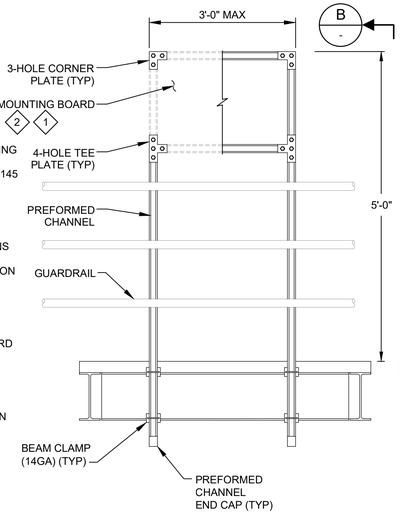

A ELEVATION

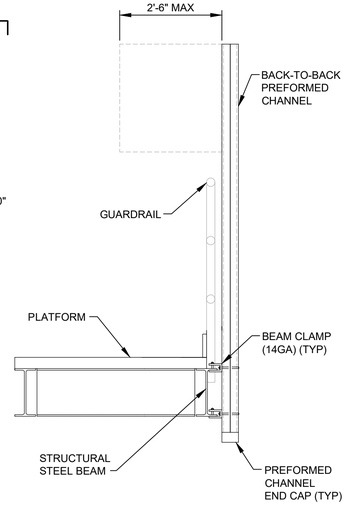

B SECTION

GENERAL NOTES:

1. AS SHOWN, THE MOUNTING STAND IS SUITABLE FOR THE FOLLOWING DESIGN CRITERIA:
   - BASIC WIND SPEED (3 SECOND GUST, 33 FEET ABOVE GROUND) : 145 MPH
   - WIND EXPOSURE CATEGORY: D
   - NON-SPECIAL WIND REGIONS.
   - SEISMIC DESIGN CATEGORY: A, THROUGH D
   - RISK CATEGORY: IV
   - MAXIMUM DEAD LOAD OF 200 LBS. SUBMIT DESIGN CALCULATIONS FOR EACH INSTALLATION THAT EXCEEDS THE SPECIFIED DESIGN CRITERIA. REFER TO THE SPECIFICATION FOR DESIGN CALCULATION SUBMITTAL REQUIREMENTS.
2. REFER TO THE SPECIFICATIONS FOR MATERIAL REQUIREMENTS.
3. PROVIDE ADDITIONAL SUPPORTS FOR ENCLOSURES THAT CAN BE MOUNTED DIRECTLY TO THE PREFORMED CHANNEL. USE STANDARD 4-HOLE TEE PLATES TO CONNECT TO THE MOUNTING STAND.
4. LOCATE EXISTING REINFORCEMENT PRIOR TO DRILLING FOR ADHESIVE ANCHORS.
5. COORDINATE MOUNTING LOCATION WITH GUARDRAIL POSTS WHEN USING SIDE MOUNTED POSTS.

KEY NOTES:

1. PROVIDE A MOUNTING BOARD FOR INSTRUMENTS AND DEVICES WEIGHING LESS THAN 20 POUNDS THAT CANNOT BE MOUNTED DIRECTLY TO PREFORMED CHANNEL. EQUIPMENT ANCHORAGE TO THE MOUNTING BOARD TO BE DESIGNED BY THE CONTRACTOR. PROVIDE A PREFORMED CHANNEL BRACE BEHIND THE MOUNTING BOARD IF REQUIRED.
2. PROVIDE ADDITIONAL PREFORMED CHANNEL SUPPORTS FOR ENCLOSURES THAT CAN BE MOUNTED DIRECTLY TO THE PREFORMED CHANNEL, WHERE REQUIRED.

EM214 TYP — EQUIPMENT MOUNTING STAND ON PLATFORM

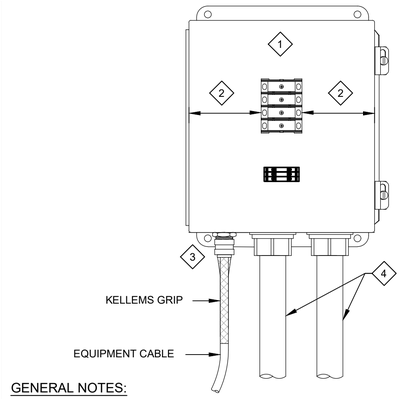

GENERAL NOTES:

1. REFER TO THE SPECIFICATIONS FOR ENCLOSURE AND MATERIAL REQUIREMENTS.
2. PROVIDE A BACK PANEL AND DIN RAIL FOR MOUNTING THE POWER AND CONTROL BLOCKS.
3. DO NOT MAKE CONDUIT CONNECTIONS TO THE TOP OF NEMA 4X ENCLOSURES.

KEY NOTES:

1. LISTED POWER TERMINAL BLOCKS WITH SAFETY COVER.
2. PROVIDE CLEARANCE IN ACCORDANCE WITH THE NEC.
3. THE EQUIPMENT CABLE MAY BE ROUTED IN CONDUIT FROM THE WET WELL. REFER TO THE DRAWINGS.
4. PROVIDE CONDUIT SEALS ON THE BUILDING WIRE SIDE OF THE JUNCTION BOX AS REQUIRED.

EM315 TYP — SUBMERSIBLE EQUIPMENT CABLE CONNECTION DETAIL

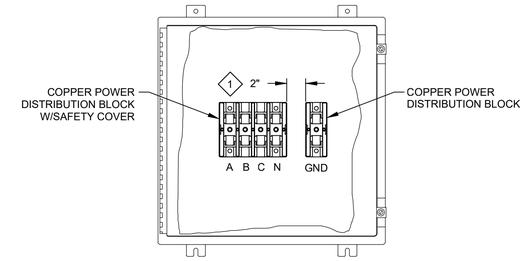

GENERAL NOTES:

1. CONTRACTOR TO SIZE BOX AND POWER BLOCKS SPACING TO CONFORM TO NEC AND MANUFACTURER REQUIREMENTS.
2. REFER TO THE SPECIFICATIONS FOR ENCLOSURE MATERIAL AND NEMA TYPE REQUIREMENTS.

KEY NOTES:

1. INSTALL CIRCUIT BREAKERS OR FUSES AS REQUIRED TO MEET THE AVAILABLE FAULT CURRENT REQUIREMENTS

EM480 TYP — TYPICAL POWER J-BOX DETAIL

9/13/22

REV	DATE	BY	DESCRIPTION
			BID SET

DESIGNED CE
DRAWN CE
CHECKED CE
DATE MAY 2026

COLORADO LICENSED
55107
KRISTEN GROAT
Digitally signed by Kristen M Groat
DN: cn=Kristen M Groat, o=Carollo Engineers, ou=Water, email=kgroat@carollo.com, c=US
Date: 2026.05.08 14:52:54 -06'00'
PROFESSIONAL ENGINEER

carollo®

THORNTON WATER PROJECT

CITY OF THORNTON - THORNTON WATER PROJECT
CHEMICAL BUILDING AND PRV VAULTS
ELECTRICAL
TYPICAL DETAIL - 7

VERIFY SCALES
BAR IS ONE INCH ON ORIGINAL DRAWING
0 1"
IF NOT ONE INCH ON THIS SHEET, ADJUST SCALES ACCORDINGLY

JOB NO. 204403
DRAWING NO. 00TE07
SHEET NO. 157 OF 168

LAST SAVED BY: GHerrera

PROJECT NO. 204403-100000 FILE NAME: 204403_00TE07.dwg

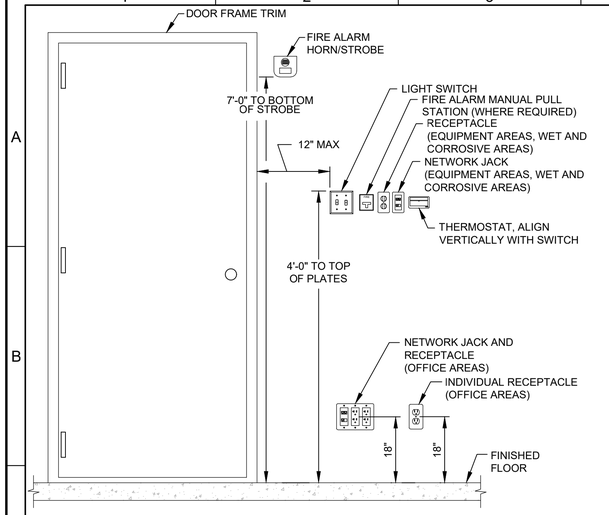

GENERAL NOTES:

1. ALL SWITCHES AND RECEPTACLES SHALL BE EMBEDDED IN THE WALL UNLESS OTHERWISE INDICATED ON THE DRAWINGS.

EM725 TYP — OUTLET BOX MOUNTING

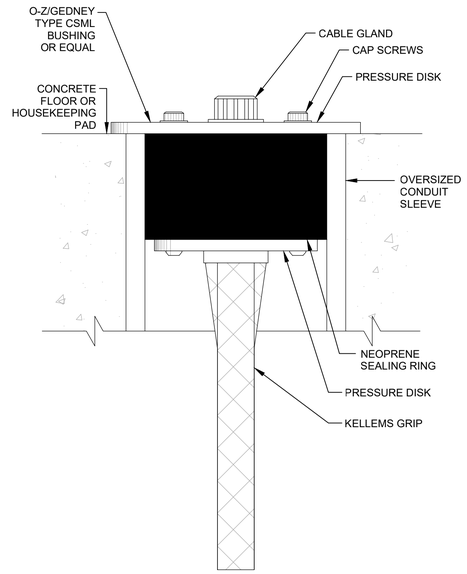

EM901 TYP J — SUBMERSIBLE CABLE CUSTOM CAST IN PLACE SLEEVE

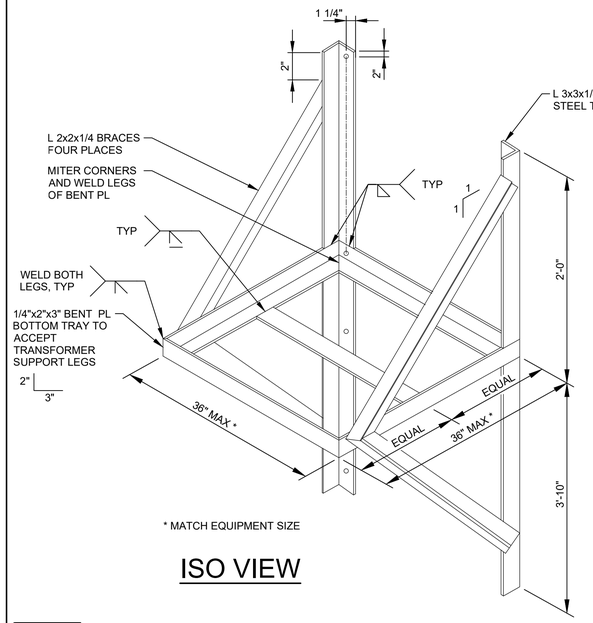

* MATCH EQUIPMENT SIZE

ISO VIEW

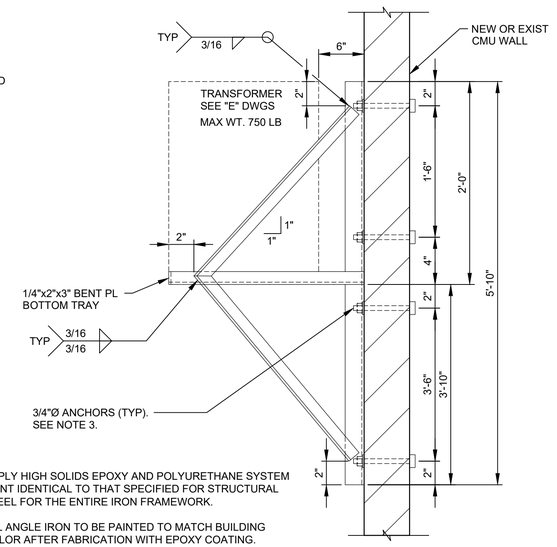

NOTES:

1. APPLY HIGH SOLIDS EPOXY AND POLYURETHANE SYSTEM PAINT IDENTICAL TO THAT SPECIFIED FOR STRUCTURAL STEEL FOR THE ENTIRE IRON FRAMEWORK.
2. ALL ANGLE IRON TO BE PAINTED TO MATCH BUILDING COLOR AFTER FABRICATION WITH EPOXY COATING.
3. FOR EXISTING CMU, PROVIDE ANCHORS PER DETAIL S444/TYP. FOR NEW CMU, PROVIDE ANCHORS PER DETAIL S440/TYP.

SIDE VIEW

EM903 TYP J — TRANSFORMER WALL MOUNT DETAIL

REV	DATE	BY	DESCRIPTION
			BID SET

DESIGNED CE
DRAWN CE
CHECKED CE
DATE MAY 2026

COLORADO LICENSED 55107 ALLEN GROAT — digitally signed by Kellen W Groat, Date: 2026.05.08 14:52:07 -06'00' — PROFESSIONAL ENGINEER

carollo®

THORNTON WATER PROJECT

CITY OF THORNTON - THORNTON WATER PROJECT

CHEMICAL BUILDING AND PRV VAULTS

ELECTRICAL

TYPICAL DETAIL - 8

VERIFY SCALES
BAR IS ONE INCH ON ORIGINAL DRAWING
0 1"
IF NOT ONE INCH ON THIS SHEET, ADJUST SCALES ACCORDINGLY

JOB NO. 204403
DRAWING NO. 00TE08
SHEET NO. 158 OF 168

LAST SAVED BY: GHerrera

PROJECT NO. 204403-100000 FILE NAME: 204403_00TE08.dwg

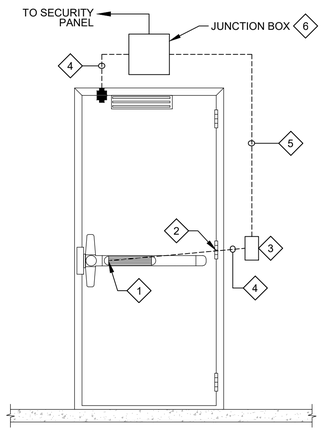

KEY NOTES:

1. REQUEST TO EXIT (INTEGRAL TO DOOR HARDWARE).
2. ELECTRIC DOOR HINGE. INSTALL PER MANUFACTURER INSTRUCTIONS.
3. EMBEDDED SINGLE GANG BOX ON SECURE SIDE.
4. 3/4" CONDUIT STUBBED INTO DOOR FRAME.
5. 3/4" EMBEDDED CONDUIT.
6. MOUNT WITHIN 10" OF DOOR FRAME.

ES91A TYP SINGLE DOOR SECURITY - EGRESS ONLY MONITORED

J 8-9-2022

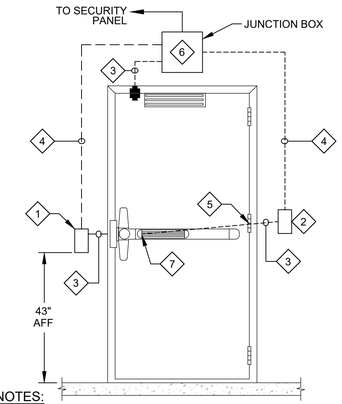

GENERAL NOTES:

1. CONDUIT AND JUNCTION BOXES PROVIDED UNDER DIVISION 26. SECURITY DEVICES AND WIRING PROVIDED UNDER SECTION 28_10_00.

KEY NOTES:

1. PROVIDE EMBEDDED SINGLE GANG BOX FOR CARD READER. INSTALL FLUSH WITH EXTERIOR WALL.
2. SINGLE GANG BOX ON SECURE SIDE.
3. 3/4" CONDUIT STUBBED INTO DOOR FRAME.
4. 3/4" EMBEDDED CONDUIT.
5. ELECTRIC DOOR HINGE. INSTALL PER MANUFACTURER INSTRUCTIONS.
6. MOUNT WITHIN 10" OF DOOR FRAME.
7. REQUEST TO EXIT (INTEGRAL TO DOOR HARDWARE).

ES91B TYP SINGLE DOOR SECURITY WITH CARD READER

J 8-9-2022

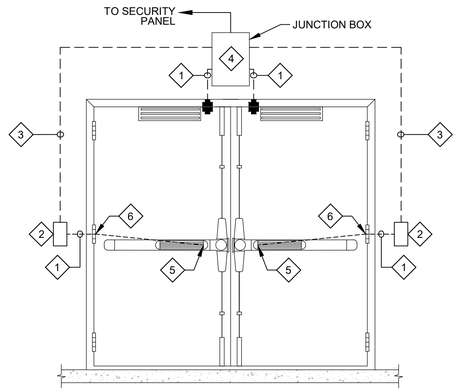

GENERAL NOTES:

1. CONDUIT AND JUNCTION BOXES PROVIDED UNDER DIVISION 26. SECURITY DEVICES AND WIRING PROVIDED UNDER SECTION 28_10_00.

KEY NOTES:

1. 3/4" CONDUIT STUBBED INTO DOOR FRAME.
2. EMBEDDED SINGLE GANG BOX ON SECURE SIDE.
3. 3/4" EMBEDDED CONDUIT.
4. MOUNT WITHIN 10" OF DOOR FRAME.
5. REQUEST TO EXIT (INTEGRAL TO DOOR HARDWARE).
6. ELECTRIC DOOR HINGE. INSTALL PER MANUFACTURER INSTRUCTIONS.

ES92A TYP DOUBLE DOOR SECURITY - EGRESS ONLY MONITORED

J 8-9-2022

REV	DATE	BY	DESCRIPTION
			BID SET

DESIGNED KWG
DRAWN SGH
CHECKED SLB
DATE MAY 2026

COLORADO LICENSED PROFESSIONAL ENGINEER 55107 KELLEN GROSS

carollo

THORNTON WATER PROJECT

CITY OF THORNTON - THORNTON WATER PROJECT

CHEMICAL BUILDING AND PRV VAULTS

ELECTRICAL

TYPICAL DETAIL - 9

VERIFY SCALES
BAR IS ONE INCH ON ORIGINAL DRAWING
0 1"
IF NOT ONE INCH ON THIS SHEET, ADJUST SCALES ACCORDINGLY

JOB NO. 204403
DRAWING NO. 00TE09
SHEET NO. 159 OF 168

LAST SAVED BY: GHerrera

PROJECT NO. 204403-100000 FILE NAME: 204403_00TE09.dwg

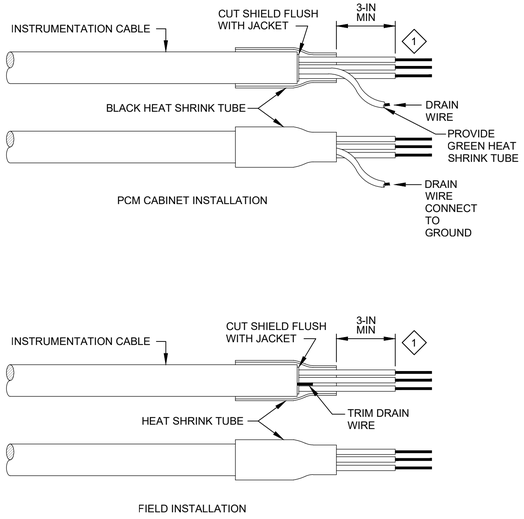

KEY NOTES:

1. SIMILAR FOR 2-CONDUCTOR SHIELDED CABLE.

NE101 TYP — TERMINATION DETAILS INSTRUMENTATION SHIELDED CABLE

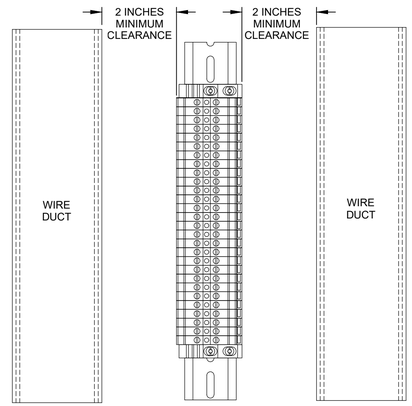

NE102 TYP — TERMINAL BLOCK CLEARANCE

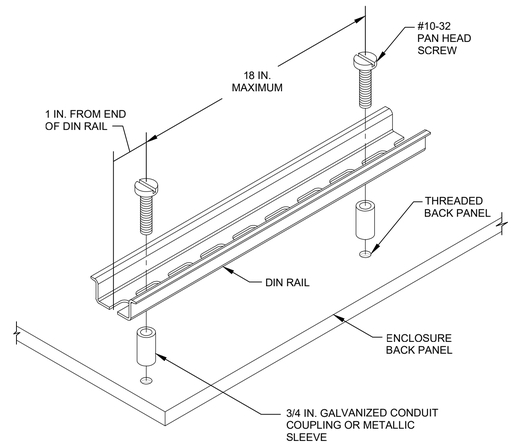

NE103 TYP — DIN RAIL MOUNTING

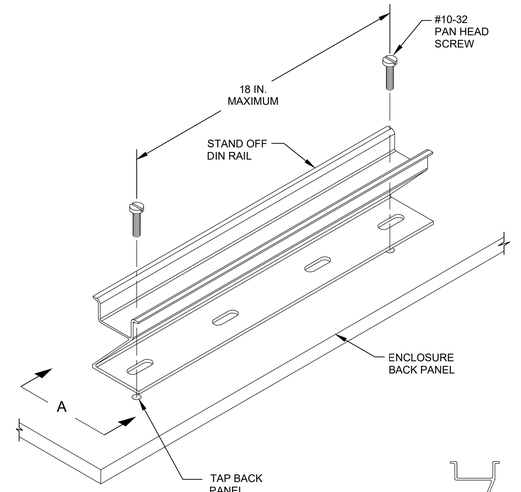

NE104 TYP — RAISED DIN RAIL MOUNTING

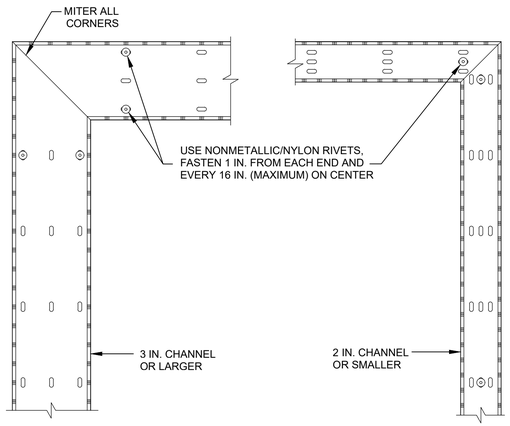

NE105 TYP — PANEL WIRING DUCT MOUNTING

REV	DATE	BY	DESCRIPTION
			BID SET

DESIGNED CE
DRAWN CE
CHECKED JM
DATE MAY 2026

COLORADO LICENSED 55107 KAELEN GRONA — digitally signed by Kaelen W Grona Date Info: Candko Engineering, Inc. 2026.05.06 14:53:53 -06'00' — PROFESSIONAL ENGINEER

carollo®

THORNTON WATER PROJECT

CITY OF THORNTON - THORNTON WATER PROJECT
CHEMICAL BUILDING AND PRV VAULTS
INSTRUMENTATION
TYPICAL DETAILS 1

VERIFY SCALES
BAR IS ONE INCH ON ORIGINAL DRAWING
0 1"
IF NOT ONE INCH ON THIS SHEET, ADJUST SCALES ACCORDINGLY

JOB NO. 204403
DRAWING NO. 00TN01
SHEET NO. 160 OF 168

LAST SAVED BY: GHerrera

PROJECT NO. 204403-100000 FILE NAME: 204403_TN01.dwg

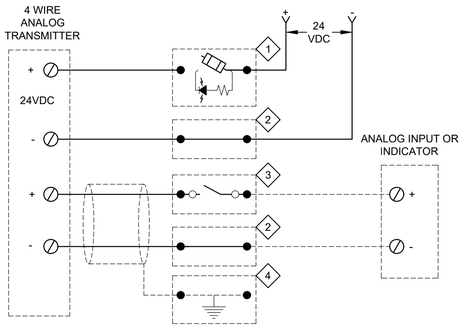

KEY NOTES:

1. FUSED TERMINAL/DISCONNECT BLOCK.
2. FEED THROUGH TERMINAL BLOCK.
3. TEST BLOCK WITH KNIFE DISCONNECT SWITCH.
4. GROUNDING TERMINAL BLOCK.

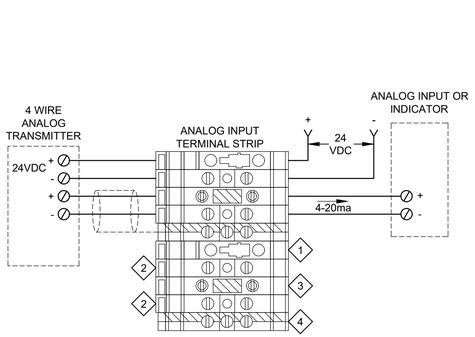

GENERAL NOTES:

1. GROUND SHIELD AT ANALOG TERMINAL STRIP INSIDE PCM PANEL.
2. (-)24VDC RETURNS OR COMMONS CAN'T BE PROTECTED OR HAVE A DISCONNECTING MEANS ON SYSTEMS WITH GROUNDED 24VDC POWER SUPPLIES.

FOUR WIRE TRANSMITTER WITH (GROUNDED) 24VDC POWER SUPPLY SCHEMATIC

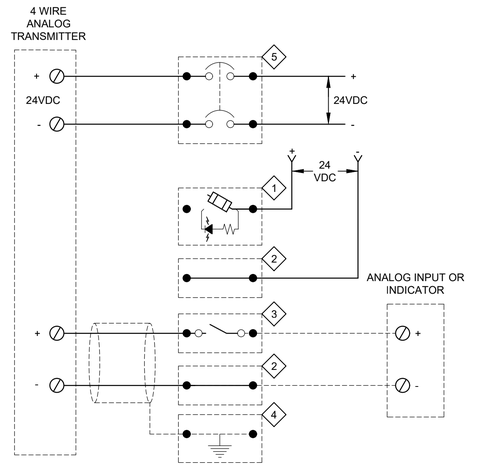

KEY NOTES:

1. FUSED TERMINAL/DISCONNECT BLOCK.
2. FEED THROUGH TERMINAL BLOCK.
3. TEST BLOCK WITH KNIFE DISCONNECT SWITCH.
4. GROUNDING TERMINAL BLOCK.
5. 2-POLE 24VDC CIRCUIT BREAKER.

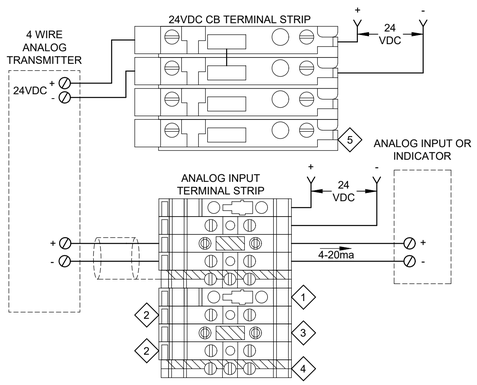

GENERAL NOTES:

1. GROUND SHIELD AT ANALOG TERMINAL STRIP INSIDE PCM PANEL.
2. PROVIDE (-)24VDC RETURNS WITH PROTECTION ON ALL UN-GROUNDED 24VDC POWER SUPPLIES.

FOUR WIRE TRANSMITTER WITH (UN-GROUNDED) 24VDC POWER SUPPLY SCHEMATIC

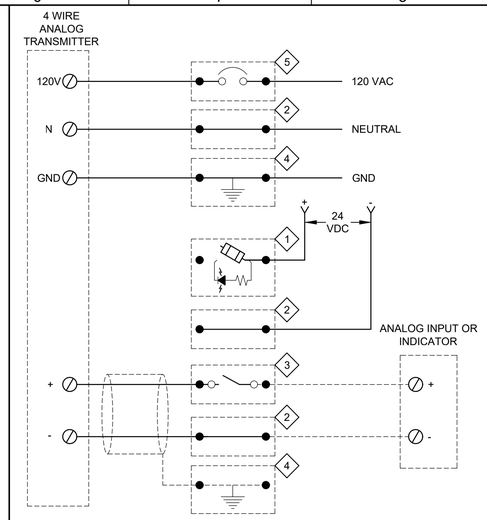

KEY NOTES:

1. FUSED TERMINAL/DISCONNECT BLOCK.
2. FEED THROUGH TERMINAL BLOCK.
3. TEST BLOCK WITH KNIFE DISCONNECT SWITCH.
4. GROUNDING TERMINAL BLOCK.
5. 120VAC CIRCUIT BREAKER.

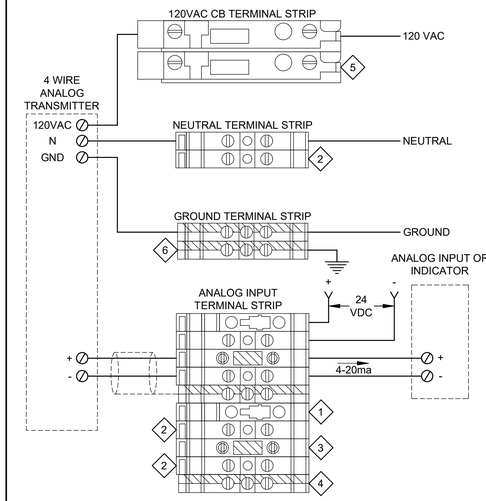

GENERAL NOTES:

1. GROUND SHIELD AT ANALOG TERMINAL STRIP INSIDE PCM PANEL.
2. PROVIDE 120VAC CIRCUIT BREAKER FOR EACH INSTRUMENT.

FOUR WIRE (120VAC) TRANSMITTER SCHEMATIC

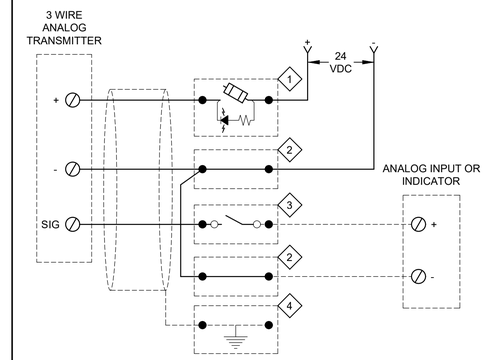

KEY NOTES:

1. FUSED TERMINAL/DISCONNECT BLOCK.
2. FEED THROUGH TERMINAL BLOCK.
3. TEST BLOCK WITH KNIFE DISCONNECT SWITCH.
4. GROUNDING TERMINAL BLOCK.

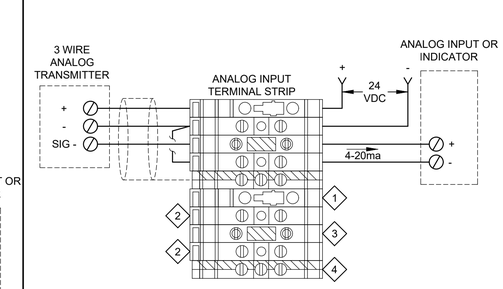

GENERAL NOTES:

1. GROUND SHIELD AT ANALOG TERMINAL STRIP INSIDE PCM PANEL.

24VDC THREE WIRE ANALOG TRANSMITTER SCHEMATIC

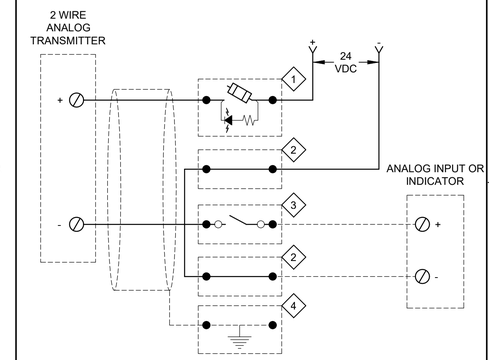

KEY NOTES:

1. FUSED TERMINAL/DISCONNECT BLOCK.
2. FEED THROUGH TERMINAL BLOCK.
3. TEST BLOCK WITH KNIFE DISCONNECT SWITCH.
4. GROUNDING TERMINAL BLOCK.

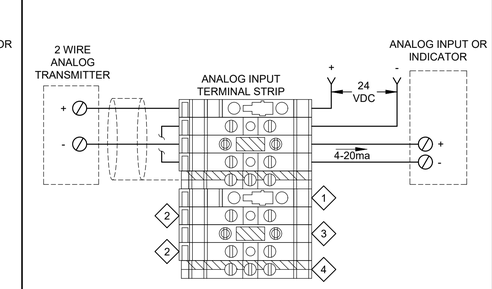

GENERAL NOTES:

1. GROUND SHIELD AT ANALOG TERMINAL STRIP INSIDE PCM PANEL.

24VDC TWO WIRE TRANSMITTER SCHEMATIC

NE304 TYP — ANALOG INPUT TERMINAL DETAILS

REV	DATE	BY	DESCRIPTION
			BID SET

DESIGNED CE
DRAWN CE
CHECKED JM
DATE MAY 2026

COLORADO LICENSED
ALLEN GROSS
55107
Digitally signed by Matteo M Carollo
Contact Info: Carollo Engineers
Date: 2026.05.08 14:54:37 -06'00'
PROFESSIONAL ENGINEER

CITY OF THORNTON - THORNTON WATER PROJECT
CHEMICAL BUILDING AND PRV VAULTS
INSTRUMENTATION
TYPICAL DETAILS 2

VERIFY SCALES
BAR IS ONE INCH ON ORIGINAL DRAWING
0 1"
IF NOT ONE INCH ON THIS SHEET, ADJUST SCALES ACCORDINGLY

JOB NO. 204403
DRAWING NO. 00TN02
SHEET NO. 161 OF 168

LAST SAVED BY: GHerrera

PROJECT NO. 204403-100000 FILE NAME: 204403_TN02.dwg

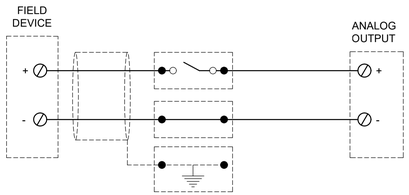

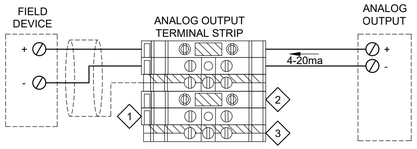

GENERAL NOTES:

1. GROUND SHIELD AT ANALOG TERMINAL STRIP INSIDE PCM PANEL.

KEY NOTES:

1. FEED THROUGH TERMINAL BLOCK.
2. TEST BLOCK WITH KNIFE DISCONNECT SWITCH.
3. GROUNDING TERMINAL BLOCK.

NE305 TYP — ANALOG OUTPUT TERMINAL DETAILS
24VDC ANALOG OUTPUT SCHEMATIC

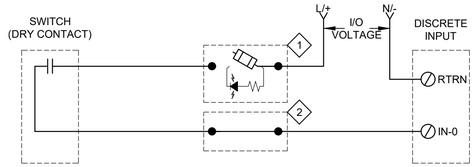

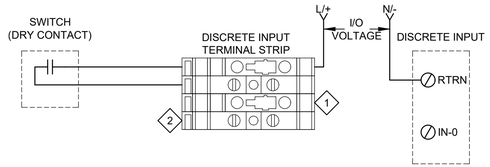

GENERAL NOTES:

1. REFER TO SPECIFICATIONS FOR PLC DISCRETE I/O VOLTAGE.

KEY NOTES:

1. FUSED TERMINAL/DISCONNECT BLOCK.
2. FEED THROUGH TERMINAL BLOCK.

NE306 TYP — DISCRETE INPUT TERMINAL DETAILS
(DRY CONTACT) SCHEMATIC

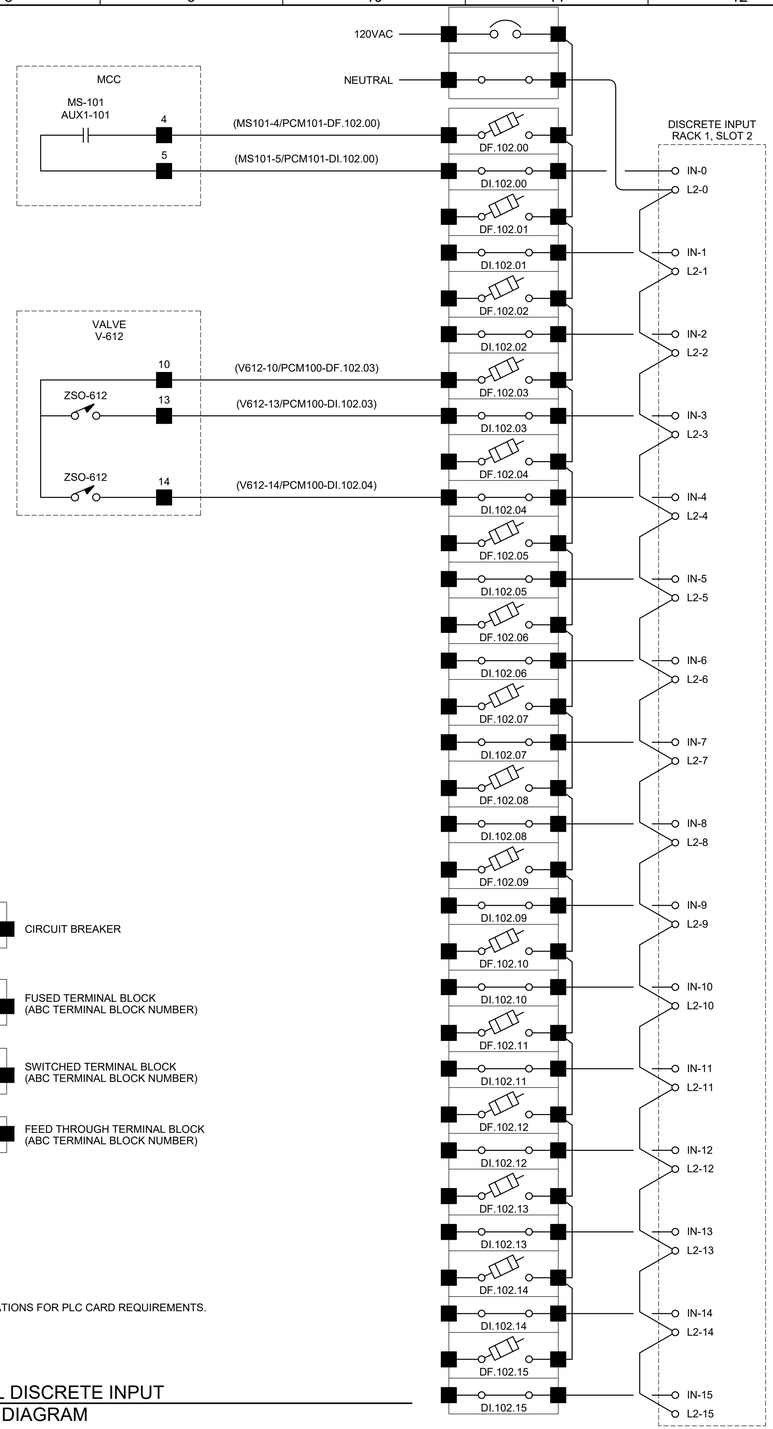

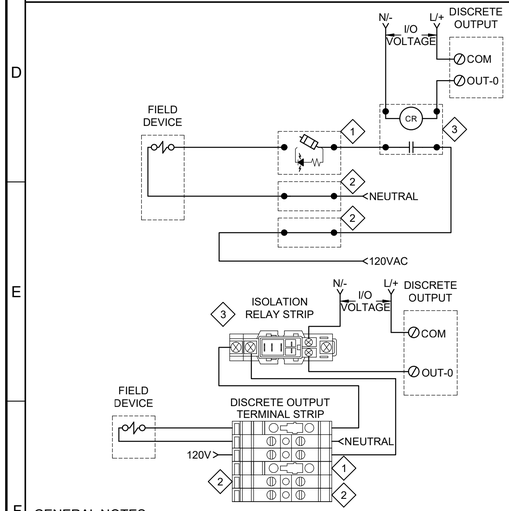

GENERAL NOTES:

1. REFER TO SPECIFICATIONS FOR PLC DISCRETE I/O VOLTAGE.

KEY NOTES:

1. FUSED TERMINAL/DISCONNECT BLOCK.
2. FEED THROUGH TERMINAL BLOCK.
3. ISOLATION RELAY.

NE307 TYP — DISCRETE OUTPUT TERMINAL DETAILS
(PANEL SOURCED) SCHEMATIC

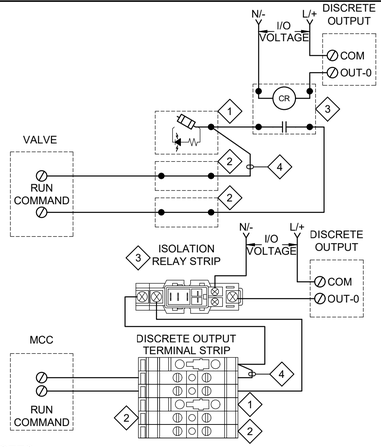

GENERAL NOTES:

1. REFER TO SPECIFICATIONS FOR PLC DISCRETE I/O VOLTAGE.
2. USE MANUFACTURED SPADE OR PIN STYLE JUMPER. WIRE JUMPERS ARE NOT ACCEPTABLE.

KEY NOTES:

1. FUSED TERMINAL/DISCONNECT BLOCK.
2. FEED THROUGH TERMINAL BLOCK.
3. ISOLATION RELAY.
4. JUMPER.

NE308 TYP — DISCRETE OUTPUT TERMINAL DETAILS
(EXTERNALLY SOURCED) SCHEMATIC

GENERAL NOTES:

1. REFER TO SPECIFICATIONS FOR PLC CARD REQUIREMENTS.

NE310 TYP — TYPICAL DISCRETE INPUT
WIRING DIAGRAM

REV	DATE	BY	DESCRIPTION
			BID SET

DESIGNED CE
DRAWN CE
CHECKED JM
DATE MAY 2026

COLORADO LICENSED — ALLEN GRAHAM — 55107 — Digitally signed by Kristen M Carollo — Date: 2026.05.06 14:54:57 -06'00' — PROFESSIONAL ENGINEER

carollo®

THORNTON WATER PROJECT

CITY OF THORNTON - THORNTON WATER PROJECT
CHEMICAL BUILDING AND PRV VAULTS
INSTRUMENTATION
TYPICAL DETAILS 3

VERIFY SCALES
BAR IS ONE INCH ON ORIGINAL DRAWING
0 1"
IF NOT ONE INCH ON THIS SHEET, ADJUST SCALES ACCORDINGLY

JOB NO. 204403
DRAWING NO. 00TN03
SHEET NO. 162 OF 168

LAST SAVED BY: GHerrera

PROJECT NO. 204403-100000 FILE NAME: 204403_TN03.dwg

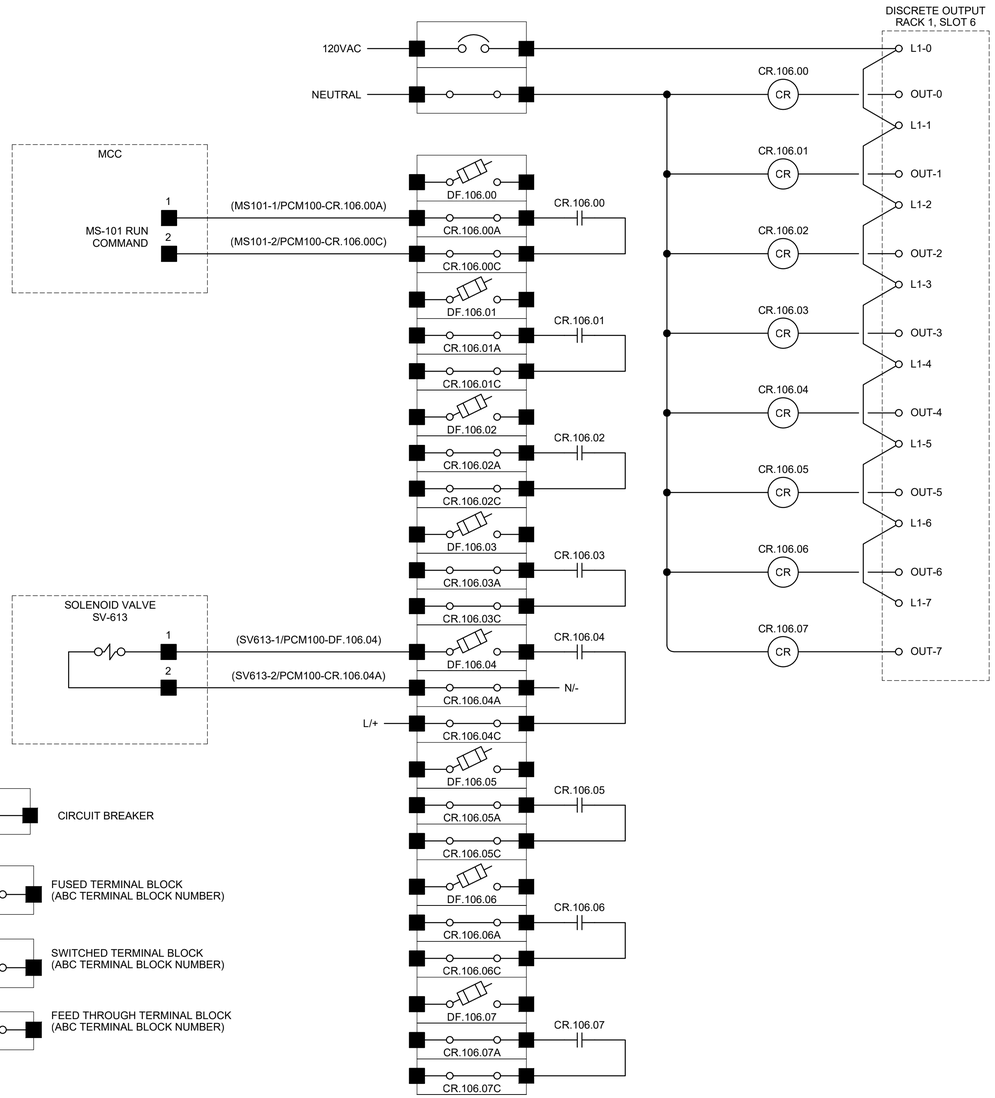

GENERAL NOTES:

1. REFER TO SPECIFICATIONS FOR PLC CARD REQUIREMENTS.

NE311 TYP — TYPICAL DISCRETE OUTPUT WIRING DIAGRAM

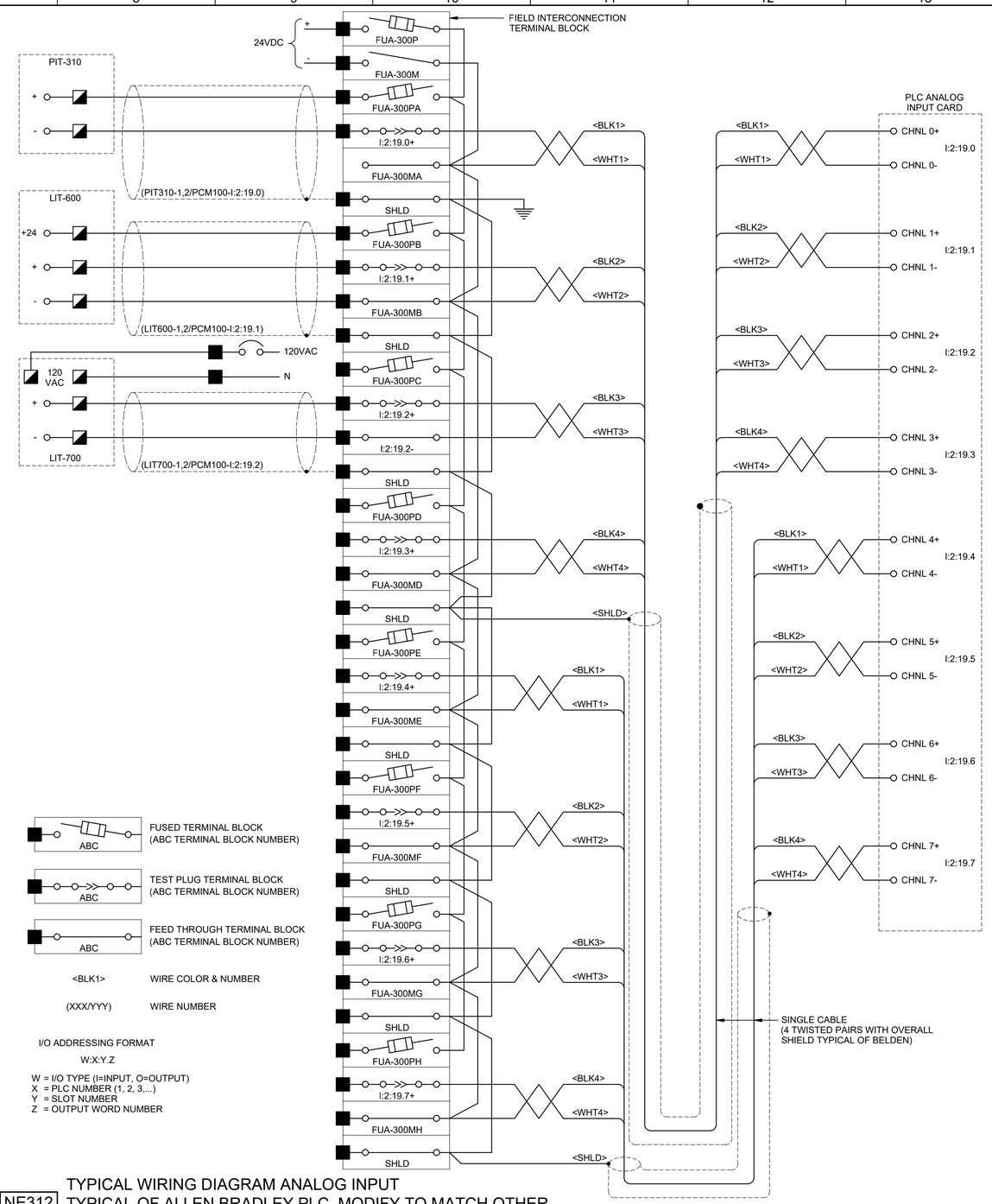

NE312 TYP — TYPICAL WIRING DIAGRAM ANALOG INPUT TYPICAL OF ALLEN BRADLEY PLC. MODIFY TO MATCH OTHER PLC MANUFACTURER'S I/O NUMBERING SYSTEM

REV	DATE	BY	DESCRIPTION
			BID SET

DESIGNED CE
DRAWN CE
CHECKED JM
DATE MAY 2026

COLORADO LICENSED PROFESSIONAL ENGINEER 55107

carollo

THORNTON WATER PROJECT

CITY OF THORNTON - THORNTON WATER PROJECT
CHEMICAL BUILDING AND PRV VAULTS
INSTRUMENTATION
TYPICAL DETAILS 4

VERIFY SCALES
BAR IS ONE INCH ON ORIGINAL DRAWING
0 1"
IF NOT ONE INCH ON THIS SHEET, ADJUST SCALES ACCORDINGLY

JOB NO. 204403
DRAWING NO. 00TN04
SHEET NO. 163 OF 168

LAST SAVED BY: GHerrera

PROJECT NO. 204403-100000 FILE NAME: 204403_TN04.dwg

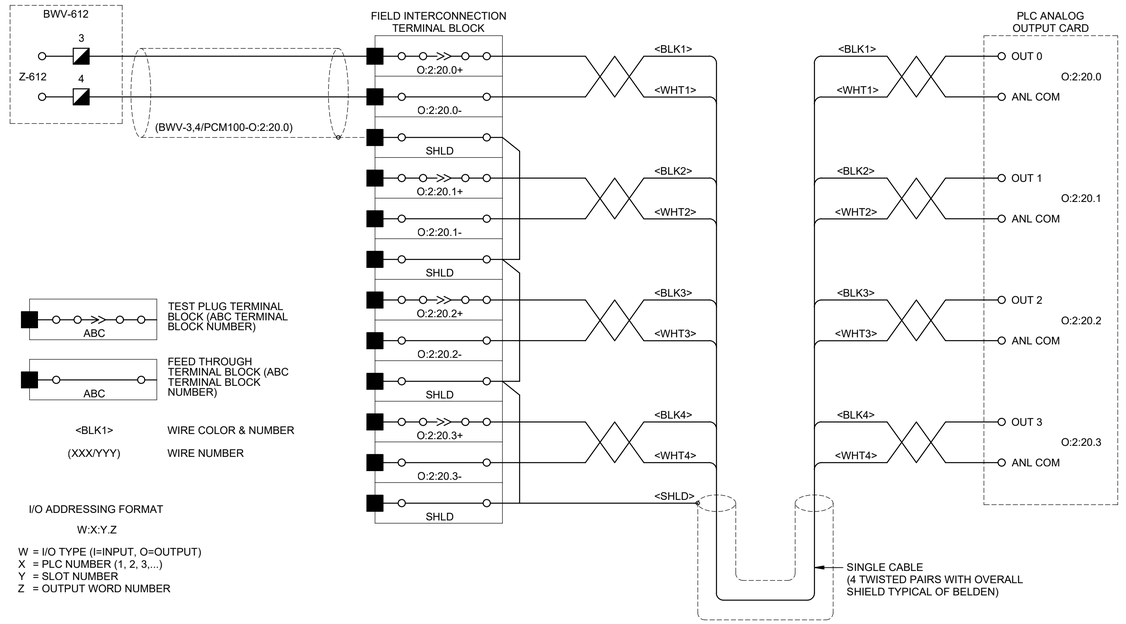

NE313 TYP

TYPICAL WIRING DIAGRAM ANALOG OUTPUT
TYPICAL OF ALLEN BRADLEY PLC. MODIFY TO MATCH OTHER PLC MANUFACTURER'S I/O NUMBERING SYSTEM

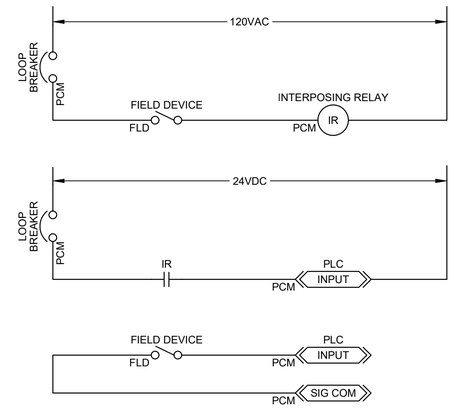

NE314 TYP

TYPICAL PLC 24VDC INPUT SCHEMATIC

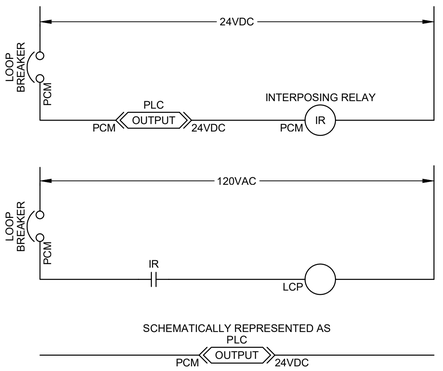

NE315 TYP

TYPICAL PLC 24VDC OUTPUT SCHEMATIC

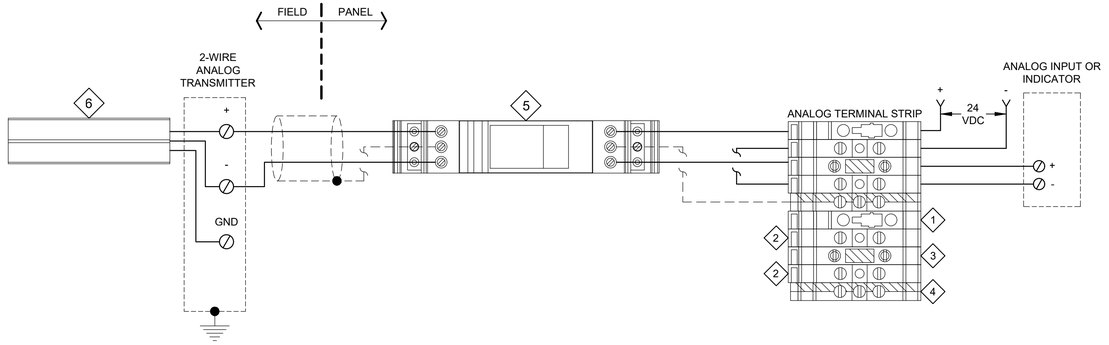

KEY NOTES:

1. FUSED TERMINAL/DISCONNECT BLOCK.
2. FEED THROUGH TERMINAL BLOCK.
3. TEST BLOCK WITH KNIFE DISCONNECT SWITCH.
4. GROUNDING TERMINAL BLOCK. BONDED TO EQUIPMENT GROUND VIA DIN RAIL MOUNTING FOOT.
5. PANEL MOUNTED SURGE PROTECTIVE DEVICE. BONDED TO EQUIPMENT GROUND VIA DIN RAIL MOUNTING FOOT.
6. FIELD DEVICE MOUNTED SURGE PROTECTIVE DEVICE. BONDED TO EQUIPMENT GROUND VIA FIELD DEVICE GROUND TERMINAL.

NE350 TYP

TYPICAL SURGE PROTECTION WIRING
2-WIRE ANALOG TRANSMITTER

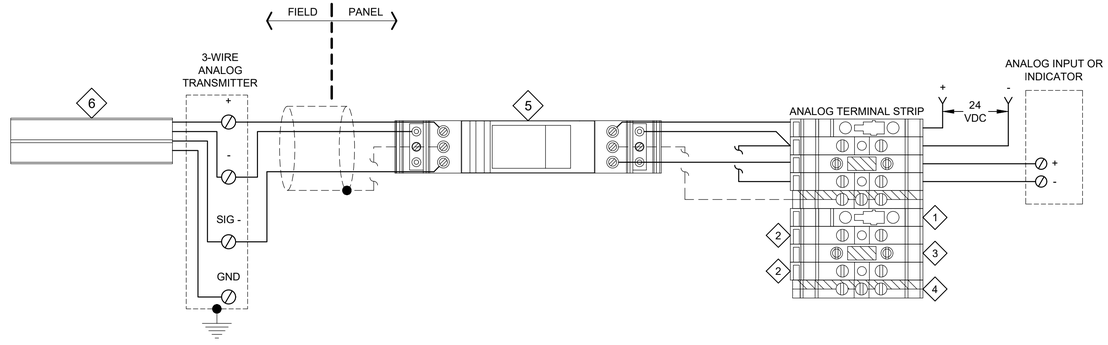

KEY NOTES:

1. FUSED TERMINAL/DISCONNECT BLOCK.
2. FEED THROUGH TERMINAL BLOCK.
3. TEST BLOCK WITH KNIFE DISCONNECT SWITCH.
4. GROUNDING TERMINAL BLOCK. BONDED TO EQUIPMENT GROUND VIA DIN RAIL MOUNTING FOOT.
5. PANEL MOUNTED SURGE PROTECTIVE DEVICE. BONDED TO EQUIPMENT GROUND VIA DIN RAIL MOUNTING FOOT.
6. FIELD DEVICE MOUNTED SURGE PROTECTIVE DEVICE. BONDED TO EQUIPMENT GROUND VIA FIELD DEVICE GROUND TERMINAL.

NE351 TYP

TYPICAL SURGE PROTECTION WIRING
3-WIRE ANALOG TRANSMITTER

REV	DATE	BY	DESCRIPTION
			BID SET

DESIGNED CE
DRAWN CE
CHECKED JM
DATE MAY 2026

COLORADO LICENSED
55107
ALLEN GROSS
2026.05.08 14:54:49-06'00'
PROFESSIONAL ENGINEER

carollo

THORNTON WATER PROJECT

CITY OF THORNTON - THORNTON WATER PROJECT
CHEMICAL BUILDING AND PRV VAULTS
INSTRUMENTATION
TYPICAL DETAILS 5

VERIFY SCALES
BAR IS ONE INCH ON ORIGINAL DRAWING
0 1"
IF NOT ONE INCH ON THIS SHEET, ADJUST SCALES ACCORDINGLY

JOB NO. 204403
DRAWING NO. 00TN05
SHEET NO. 164 OF 168

LAST SAVED BY: GHerrera

PROJECT NO. 204403-100000 FILE NAME: 204403_TN05.dwg

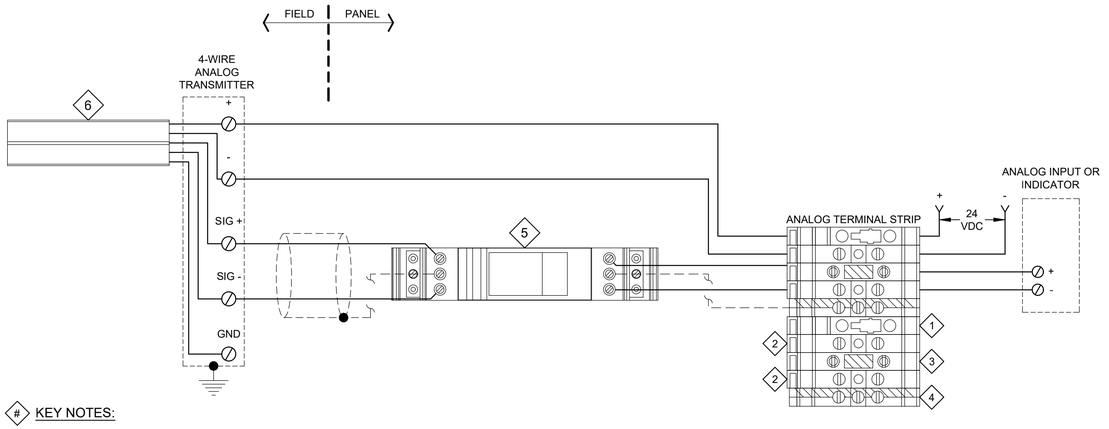

KEY NOTES:

1. FUSED TERMINAL/DISCONNECT BLOCK.
2. FEED THROUGH TERMINAL BLOCK.
3. TEST BLOCK WITH KNIFE DISCONNECT SWITCH.
4. GROUNDING TERMINAL BLOCK. BONDED TO EQUIPMENT GROUND VIA DIN RAIL MOUNTING FOOT.
5. PANEL MOUNTED SURGE PROTECTIVE DEVICE. BONDED TO EQUIPMENT GROUND VIA DIN RAIL MOUNTING FOOT.
6. FIELD DEVICE MOUNTED SURGE PROTECTIVE DEVICE. BONDED TO EQUIPMENT GROUND VIA FIELD DEVICE GROUND TERMINAL.

NE352 TYP

TYPICAL SURGE PROTECTION WIRING
4-WIRE ANALOG TRANSMITTER
WITH GROUNDED 24VDC POWER SUPPLY

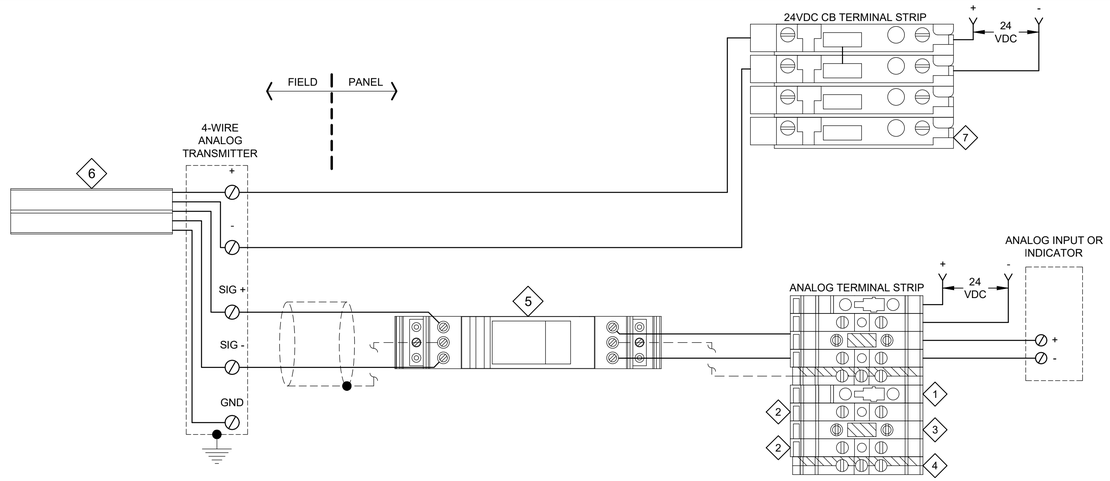

KEY NOTES:

1. FUSED TERMINAL/DISCONNECT BLOCK.
2. FEED THROUGH TERMINAL BLOCK.
3. TEST BLOCK WITH KNIFE DISCONNECT SWITCH.
4. GROUNDING TERMINAL BLOCK. BONDED TO EQUIPMENT GROUND VIA DIN RAIL MOUNTING FOOT.
5. PANEL MOUNTED SURGE PROTECTIVE DEVICE. BONDED TO EQUIPMENT GROUND VIA DIN RAIL MOUNTING FOOT.
6. FIELD DEVICE MOUNTED SURGE PROTECTIVE DEVICE. BONDED TO EQUIPMENT GROUND VIA FIELD DEVICE GROUND TERMINAL.
7. 2-POLE 24VDC CIRCUIT BREAKER.

NE353 TYP

TYPICAL SURGE PROTECTION WIRING
4-WIRE ANALOG TRANSMITTER
WITH UN-GROUNDED 24VDC POWER SUPPLY

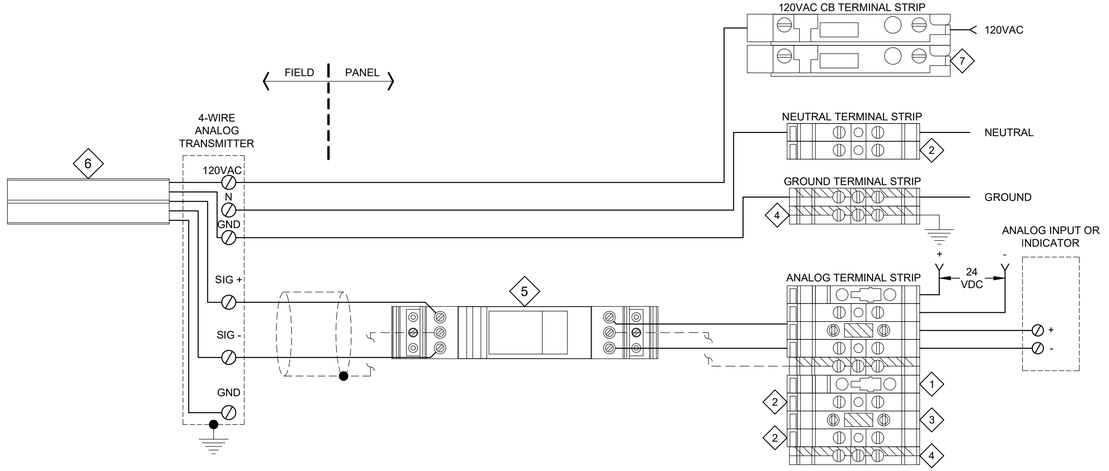

KEY NOTES:

1. FUSED TERMINAL/DISCONNECT BLOCK.
2. FEED THROUGH TERMINAL BLOCK.
3. TEST BLOCK WITH KNIFE DISCONNECT SWITCH.
4. GROUNDING TERMINAL BLOCK. BONDED TO EQUIPMENT GROUND VIA DIN RAIL MOUNTING FOOT.
5. PANEL MOUNTED SURGE PROTECTIVE DEVICE. BONDED TO EQUIPMENT GROUND VIA DIN RAIL MOUNTING FOOT.
6. FIELD DEVICE MOUNTED SURGE PROTECTIVE DEVICE. BONDED TO EQUIPMENT GROUND VIA FIELD DEVICE GROUND TERMINAL.
7. 120VAC CIRCUIT BREAKER.

NE354 TYP

TYPICAL SURGE PROTECTION WIRING
4-WIRE ANALOG TRANSMITTER
120VAC POWER SUPPLY

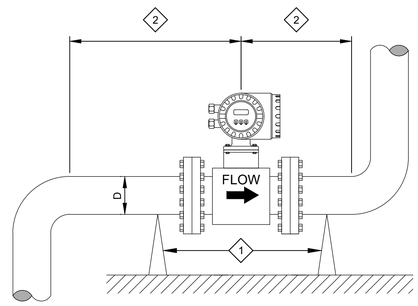

GENERAL NOTES:

1. FOLLOW MANUFACTURER'S RECOMMENDED MAXIMUM TORQUE SETTINGS. DO NOT OVER-TORQUE FLANGE BOLTS. OVERTIGHTENING THE FASTENERS WILL DEFORM SEALING FACES OR DAMAGE THE LINE.
2. ALWAYS TIGHTEN FLANGE BOLTS UNIFORMLY AND IN DIAGONALLY OPPOSITE SEQUENCE.
3. MOUNT METER SO THAT IT REMAINS FULLY FLOODED.
4. FOR METERS SPECIFIED WITH ZERO DIAMETER FEATURE, REFER TO THE MECHANICAL DRAWINGS FOR INSTALLATION.

KEY NOTES:

1. PIPE SUPPORTS BY MECHANICAL CONTRACTOR. NO SUPPORTS SHALL BE INSTALLED AT THE METER HOUSING.
2. INSTALL METER SUCH THAT THERE ARE NO PIPE BENDS FOR 5 PIPE DIAMETERS UPSTREAM AND 3 PIPE DIAMETERS DOWNSTREAM OF THE METER.

NF130 TYP

MAGNETIC FLOWMETER MOUNTING DETAIL

LAST SAVED BY: GHerrera

REV	DATE	BY	DESCRIPTION
			BID SET

DESIGNED CE
DRAWN CE
CHECKED JM
DATE MAY 2026

COLORADO LICENSED
ALLEN CAROLLO
55107
PROFESSIONAL ENGINEER
Digitally signed by Kristen M Carollo
Contact Info: Carollo Engineering
Date: 2026.05.08 14:56:09 -06'00'

carollo®

THORNTON WATER PROJECT

CITY OF THORNTON - THORNTON WATER PROJECT
CHEMICAL BUILDING AND PRV VAULTS
INSTRUMENTATION
TYPICAL DETAILS 6

VERIFY SCALES
BAR IS ONE INCH ON ORIGINAL DRAWING
0 1"
IF NOT ONE INCH ON THIS SHEET, ADJUST SCALES ACCORDINGLY

JOB NO. 204403
DRAWING NO. 00TN06
SHEET NO. 165 OF 168

PROJECT NO. 204403-100000 FILE NAME: 204403_TN06.dwg

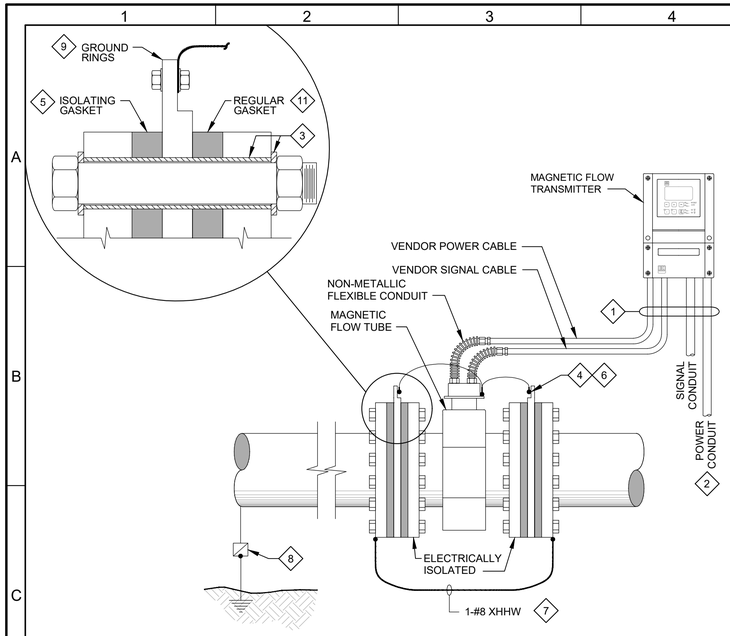

KEY NOTES:

1. USE NON-METALLIC CONDUIT TO ISOLATE FLOW TUBE FROM CONDUIT SUPPORT STRUCTURE.
2. POWER METER BY AN ISOLATION TRANSFORMER AND DO NOT GROUND THE METER.
3. NYLON/TEFLON SLEEVE AND WASHER.
4. POTENTIAL EQUALIZATION IN LINED PIPELINES WITH CATHODIC PROTECTION. WHEN THE FLUID CANNOT BE GROUNDED FOR OPERATIONAL REASONS, THE METER SHALL BE INSTALLED ISOLATED FROM PIPEWORK AND GROUND. OBSERVE THE LOCAL ELECTRICAL REGULATIONS FOR SUCH INSTALLATIONS. TAKE CARE WITH THE MOUNTING MATERIALS USED TO ENSURE THAT NO ELECTRICAL PATH TO METER EXISTS.
5. USE DIELECTRIC INSULATING MATERIAL BETWEEN METER FLANGE AND SUPPORTS.
6. CONNECT METER TUBE GROUND TERMINAL TO GROUND RINGS.
7. METER BODY SHALL NOT BE CONNECTED TO EARTH GROUND POTENTIAL.
8. ANODE FURNISHED BY CATHODIC PROTECTION SUPPLIER.
9. EQUALIZE POTENTIAL VIA GROUND RINGS BETWEEN FLUID AND MAGMETER POTENTIAL.
10. FOLLOW ALL OF THE MANUFACTURER'S INSTALLATION RECOMMENDATIONS.
11. INSTALL NON-ISOLATING GASKET BETWEEN METER FLANGES AND GROUND RINGS.

NF132 TYP REMOTE TRANSMITTER MAG FLOWMETER GROUNDING DETAIL FOR CATHODICALLY PROTECTED PIPE

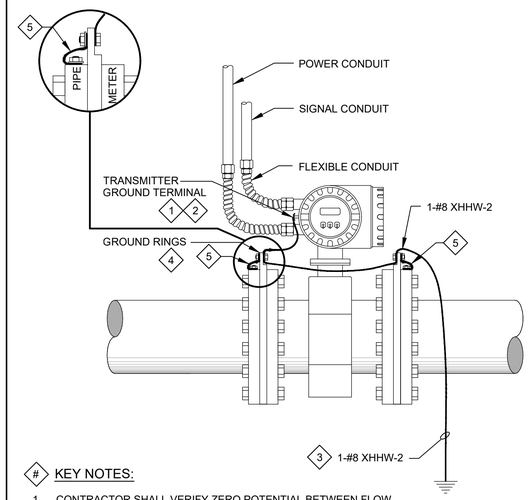

KEY NOTES:

1. CONTRACTOR SHALL VERIFY ZERO POTENTIAL BETWEEN FLOW TUBE, EARTH GROUND AND TRANSMITTER GROUND TERMINAL.
2. CONNECT TRANSMITTER GROUND TERMINAL TO GROUND RINGS.
3. CONNECT METER BODY TO EARTH GROUND POTENTIAL.
4. EQUALIZE POTENTIAL VIA GROUND RINGS BETWEEN FLUID AND MAGMETER.
5. PROVIDE BONDING JUMPER ON CONDUCTIVE PIPES.

NF136 TYP INTEGRAL MAGNETIC FLOWMETER GROUNDING DETAIL

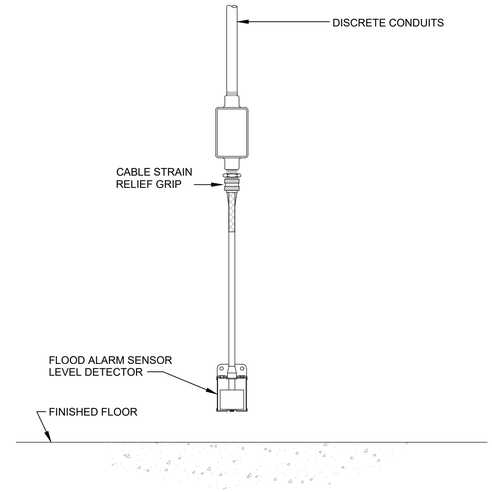

GENERAL NOTES:

1. FIELD VERIFY MOUNTING HEIGHT OF LEVEL DETECTORS WITH FIELD ENGINEER.

NL103 TYP R LEVEL DETECTOR MOUNTING DETAIL

1/16/2025

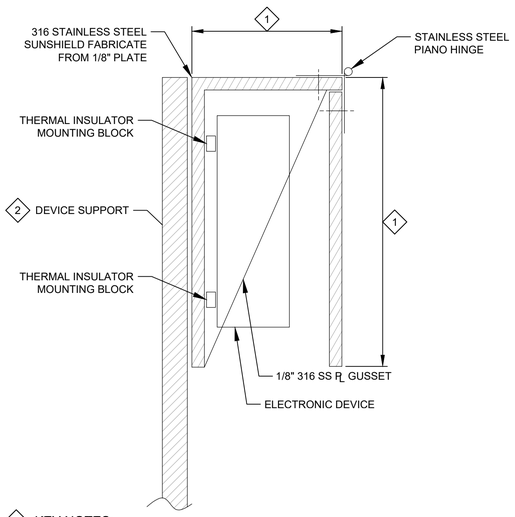

KEY NOTES:

1. SUNSHIELD DIMENSIONS SHALL EXCEED THOSE OF THE ELECTRONIC DEVICE BY 2" ON ALL SIDES.
2. WHEN WALL MOUNTED, USE 4 STAINLESS STEEL ANCHOR BOLTS. WHEN MOUNTED ON HANDRAIL, USE STAINLESS STEEL U-BOLTS, NUTS & WASHERS.

NM107 TYP SUNSHIELD MOUNTING DETAIL

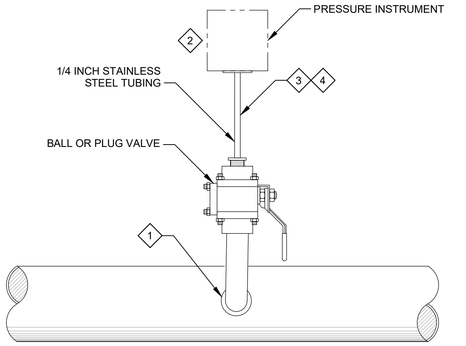

GENERAL NOTES:

1. PROVIDE DIAPHRAGM SEALS IF REQUIRED BY INSTRUMENT DATA SHEETS OR SPECIFICATIONS.
2. PROVED INSTRUMENT ASSEMBLY WITH 1" VALVES AND PIPING, OR AS APPROVED BY ENGINEER. USE STAINLESS STEEL OR AS REQUIRED FOR COMPATIBILITY WITH PROCESS FLUID. PROVIDE FITTINGS FOR INSTRUMENT CONNECTIONS AS REQUIRED.
3. REFER TO MECHANICAL DRAWINGS FOR INSTRUMENT LOCATION AND PROCESS PIPE ORIENTATION.

KEY NOTES:

1. AT LCC PRV SITE PROVIDE SIDE-TAP PROCESS CONNECTION. THREADED TAP OR SADDLE CONNECTION FOR DUCTILE IRON PIPE. WELD-O-LET OR THREAD-O-LET FOR WELDED PIPE. TEE OR REDUCING TEE FOR NON-METALLIC PIPE AND PIPES 1" OR SMALLER. AT SH PRV SITE, USE EXISTING TAP WITH EXISTING BALL VALVE AND ADD A MANIFOLD WITH TWO PRESSURE GAUGES AND TWO PRESSURE SENSORS (WITH CAPILLARIES), AND PROVIDE NEW ISOLATION AND DRAIN/CALIBRATION VALVES AS SHOWN ON DRAWING 20N06.
2. PROVIDE BRACKET TO SUPPORT INSTRUMENT.
3. SUPPORT IMPULSE TUBING EVERY 36" WITH INSULATED STAND-OFFS.
4. PROVIDE AN ADAPTABLE CENTER, WITH REMOVABLE LAYERS, PIPE ENTRY SEAL (ROXTEC OR EQUAL) AROUND IMPULSE TUBING WHERE IT EXITS THE VAULT.

NP183 TYP J REMOTE PRESSURE INSTRUMENT MOUNTING DETAIL

10/27/2025

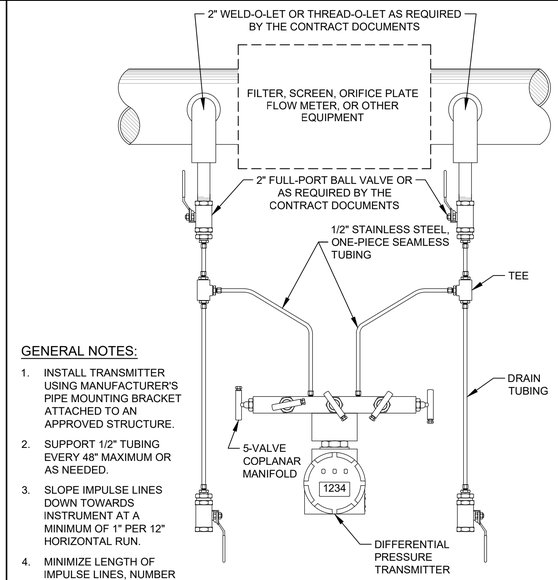

GENERAL NOTES:

1. INSTALL TRANSMITTER USING MANUFACTURER'S PIPE MOUNTING BRACKET ATTACHED TO AN APPROVED STRUCTURE.
2. SUPPORT 1/2" TUBING EVERY 48" MAXIMUM OR AS NEEDED.
3. SLOPE IMPULSE LINES DOWN TOWARDS INSTRUMENT AT A MINIMUM OF 1" PER 12" HORIZONTAL RUN.
4. MINIMIZE LENGTH OF IMPULSE LINES, NUMBER OF BENDS, ELBOWS, AND FITTINGS.

NP189 TYP S DIFFERENTIAL PRESSURE TRANSMITTER LIQUID OR STEAM APPLICATION

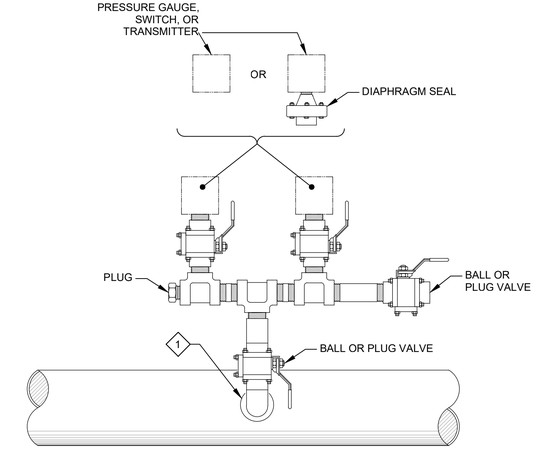

GENERAL NOTES:

1. PROVIDE DIAPHRAGM SEALS IF REQUIRED BY INSTRUMENT DATA SHEETS OR SPECIFICATIONS.
2. PROVIDE INSTRUMENT ASSEMBLY WITH 1" VALVES AND PIPING, OR AS APPROVED BY ENGINEER. USE STAINLESS STEEL OR AS REQUIRED FOR COMPATIBILITY WITH PROCESS FLUID. PROVIDE FITTINGS FOR INSTRUMENT CONNECTIONS AS REQUIRED.
3. REFER TO MECHANICAL DRAWINGS FOR INSTRUMENT LOCATION AND PROCESS PIPE ORIENTATION.

KEY NOTES:

1. PROVIDE SIDE-TAP PROCESS CONNECTION. THREADED TAP OR SADDLE CONNECTION FOR DUCTILE IRON PIPE. WELD-O-LET OR THREAD-O-LET FOR WELDED PIPE. TEE OR REDUCING TEE FOR NON-METALLIC PIPE AND PIPES 1" OR SMALLER.

NP501 TYP N MULTIPLE PRESSURE INSTRUMENTS MOUNTING DETAIL

REV	DATE	BY	DESCRIPTION
			BID SET

DESIGNED CE
DRAWN CE
CHECKED JM
DATE MAY 2026

COLORADO LICENSED BRYAN GROAT 55107 PROFESSIONAL ENGINEER

carollo

THORNTON WATER PROJECT

CITY OF THORNTON - THORNTON WATER PROJECT
CHEMICAL BUILDING AND PRV VAULTS
INSTRUMENTATION
TYPICAL DETAILS 7

VERIFY SCALES
BAR IS ONE INCH ON ORIGINAL DRAWING
0 1"
IF NOT ONE INCH ON THIS SHEET, ADJUST SCALES ACCORDINGLY

JOB NO. 204403
DRAWING NO. 00TN07
SHEET NO. 166 OF 168

LAST SAVED BY: Gherrera

PROJECT NO. 204403-100000 FILE NAME: 204403_TN07.dwg

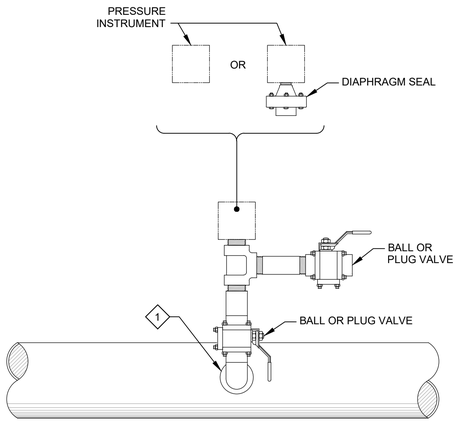

GENERAL NOTES:

1. PROVIDE DIAPHRAGM SEALS IF REQUIRED BY INSTRUMENT DATA SHEETS OR SPECIFICATIONS.
2. PROVIDE INSTRUMENT ASSEMBLY WITH 1" VALVES AND PIPING, OR AS APPROVED BY ENGINEER. USE STAINLESS OR AS REQUIRED FOR COMPATIBILITY WITH PROCESS FLUID. PROVIDE FITTINGS FOR INSTRUMENT CONNECTIONS AS REQUIRED.
3. REFER TO MECHANICAL DRAWINGS FOR INSTRUMENT LOCATION AND PROCESS PIPE ORIENTATION.

KEY NOTES:

1. PROVIDE SIDE-TAP PROCESS CONNECTION. THREADED TAP OR SADDLE CONNECTION FOR DUCTILE IRON PIPE. WELD-O-LET OR THREAD-O-LET FOR WELDED PIPE. TEE OR REDUCING TEE FOR NON-METALLIC PIPE AND PIPES 1" OR SMALLER.

NP502 TYP N — PRESSURE INSTRUMENT MOUNTING DETAIL

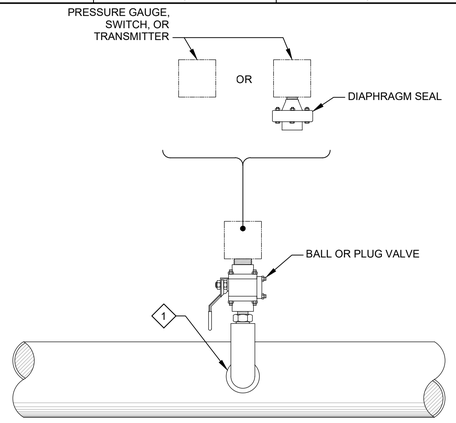

GENERAL NOTES:

1. PROVIDE DIAPHRAGM SEALS IF REQUIRED BY INSTRUMENT DATA SHEETS OR SPECIFICATIONS.
2. PROVIDE INSTRUMENT ASSEMBLY WITH 1" VALVES AND PIPING, OR AS APPROVED BY ENGINEER. USE STAINLESS STEEL OR AS REQUIRED FOR COMPATIBILITY WITH PROCESS FLUID. PROVIDE FITTINGS FOR INSTRUMENT CONNECTIONS AS REQUIRED.
3. REFER TO MECHANICAL DRAWINGS FOR INSTRUMENT LOCATION AND PROCESS PIPE ORIENTATION.

KEY NOTES:

1. PROVIDE SIDE-TAP PROCESS CONNECTION. THREADED TAP OR SADDLE CONNECTION FOR DUCTILE IRON PIPE. WELD-O-LET OR THREAD-O-LET FOR WELDED PIPE. TEE OR REDUCING TEE FOR NON-METALLIC PIPE AND PIPES 1" OR SMALLER.

NP503 TYP N — ISOLATING PRESSURE INSTRUMENT MOUNTING DETAIL

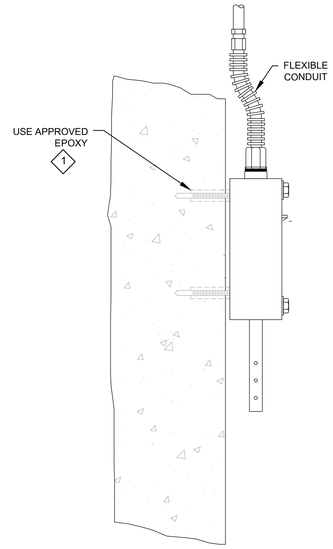

KEY NOTES:

1. INSTALL ONLY ON INTERIOR BUILDING WALL.

NT003 TYP J — TEMPERATURE SENSOR MOUNTING DETAIL

10/23/2025

REV	DATE	BY	DESCRIPTION
			BID SET

DESIGNED CE
DRAWN CE
CHECKED JM
DATE MAY 2026

COLORADO LICENSED PROFESSIONAL ENGINEER 55107 KELLEN GROSS

carollo®

THORNTON WATER PROJECT

CITY OF THORNTON - THORNTON WATER PROJECT

CHEMICAL BUILDING AND PRV VAULTS

INSTRUMENTATION

TYPICAL DETAILS 8

VERIFY SCALES
BAR IS ONE INCH ON ORIGINAL DRAWING
0 1"
IF NOT ONE INCH ON THIS SHEET, ADJUST SCALES ACCORDINGLY

JOB NO. 204403
DRAWING NO. 00TN08
SHEET NO. 167 OF 168

LAST SAVED BY: GHerrera

PROJECT NO. 204403-100000 FILE NAME: 204403_TN08.dwg

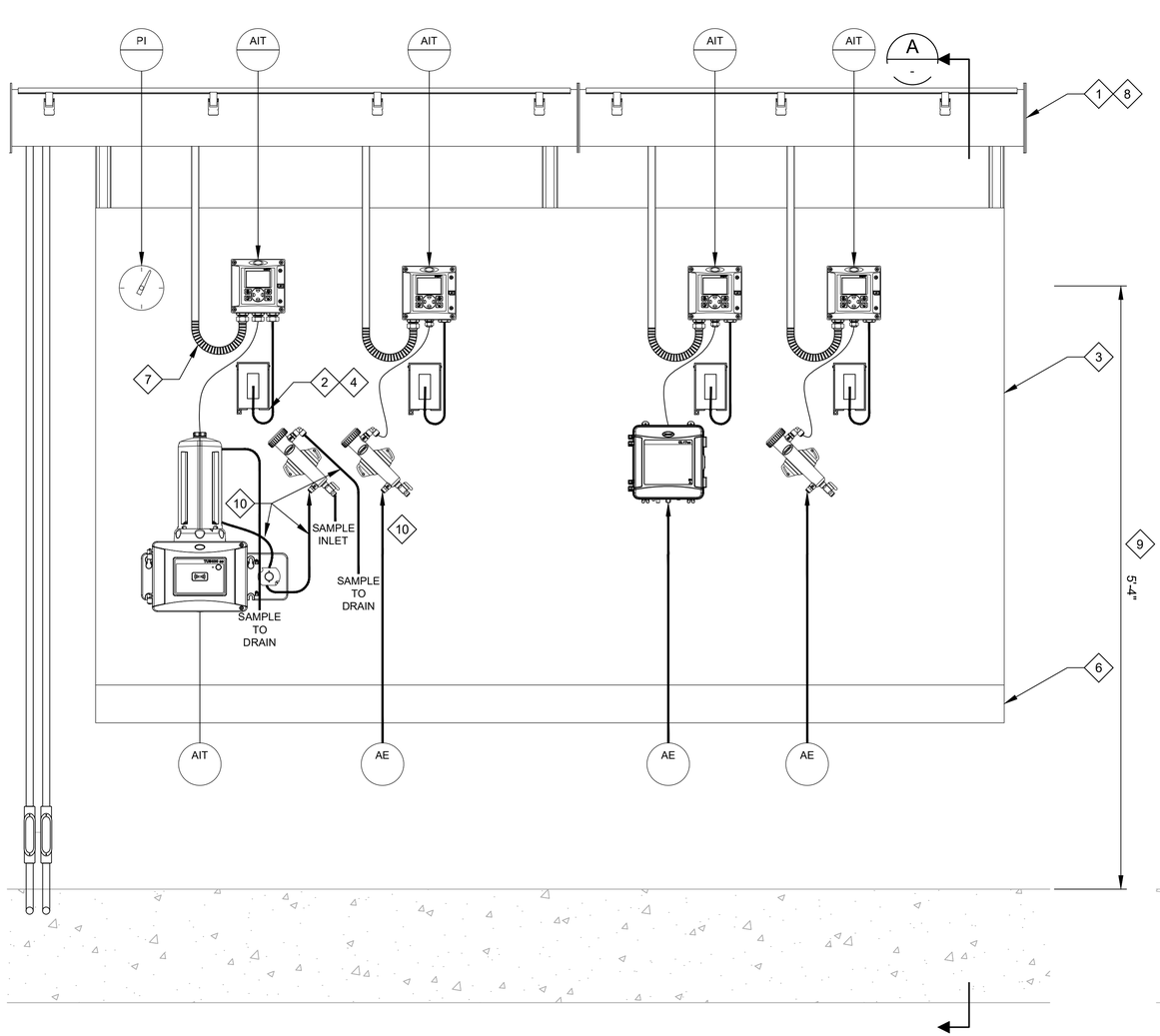

ELEVATION

PLAN

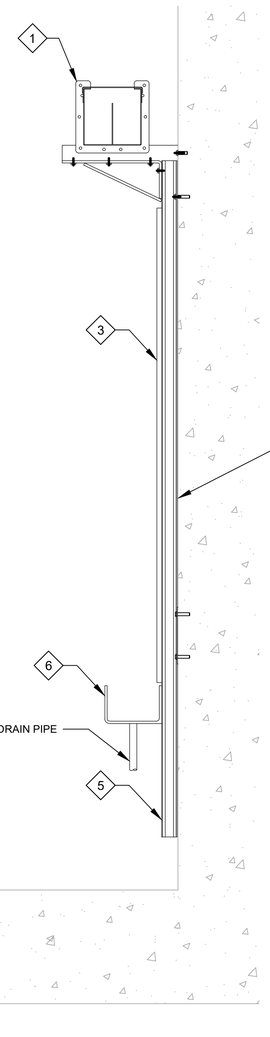

TYPICAL SAMPLE PANEL SECTION

A PLAN

SCALE: SCALE: 1 1/2" = 1'-0"

GENERAL NOTES:

1. PROVIDE INSTRUMENTS AND ANALYZERS AS INDICATED ON P&IDS.
2. SAMPLE PANEL IS ONLY A GENERAL DETAIL. REFER TO THE P&IDS FOR MORE ACCURATE DEPICTION OF THIS SAMPLE PANEL.
3. MOUNT COMPONENTS USING HARDWARE THAT IS ACCESSIBLE FROM THE FRONT OF THE MOUNTING BOARD (INSTALLATION/REMOVAL OF COMPONENTS DOES NOT REQUIRE ACCESS TO THE BACK OF THE MOUNTING BOARD).

KEY NOTES:

1. DIVIDED 6"x6" WIREWAY.
2. ROUTE POWER CONDUIT THROUGH BACK OF PANEL UP TO DISCRETE PORTION OF WIREWAY.
3. 3/4" HDPE BOARD.
4. SINGLE GANG CAST BOX WITH POLYCARBONATE GFCI PROTECTED LIGHT SWITCH. COVER SHALL BE WEATHER PROOF WHILE IN USE. PROVIDE HARD WIRED CORD SETS FOR ALL THE INSTRUMENTS REQUIRING 120VAC POWER.
5. USE APPROVED STRUCTURAL MEMBERS, MOUNTING HARDWARE AND ANCHORAGE.
6. SLOPED STAINLESS STEEL DRAIN TROUGH. PROVIDE SUPPORT LEGS AS REQUIRED FOR THE INSTALLATION.
7. USE NON-METALLIC FLEXIBLE CONDUIT FOR SIGNAL TERMINATION TO ALL INSTRUMENTS.
8. CONTRACTOR SHALL LABEL AND COIL UP ALL SPARE CONDUCTORS IN THE APPLICABLE SECTION OF THE WIREWAY.
9. MOUNT INSTRUMENT DISPLAY AT 5'-4" ABOVE FINISHED FLOOR.
10. ALL SAMPLE TUBING SHALL BE BLACK TO LIMIT ALGAE GROWTH.

INSTRUMENT TAG LIST					
STATION	PRESSURE GAUGE	TURBIDITY	ORP	CL2	pH
PRE INJECTION	PI-604	AIT-604	AIT-605	AIT-606	AIT-607
POST INJECTION	-	-	AIT-616	AIT-615	-

NA900 TYP J SAMPLE PANEL

10/23/2025

REV	DATE	BY	DESCRIPTION
			BID SET

DESIGNED CE
DRAWN CE
CHECKED JM
DATE MAY 2026

COLORADO LICENSED KELLEN GAGNE 55107 Digitally signed by Kellen W Gagne Date: 2026.05.14 14:04:36 -06'00' PROFESSIONAL ENGINEER

carollo

THORNTON WATER PROJECT

CITY OF THORNTON - THORNTON WATER PROJECT

CHEMICAL BUILDING AND PRV VAULTS

INSTRUMENTATION

TYPICAL DETAILS 9

VERIFY SCALES
BAR IS ONE INCH ON ORIGINAL DRAWING
0 1"
IF NOT ONE INCH ON THIS SHEET, ADJUST SCALES ACCORDINGLY

JOB NO. 204403
DRAWING NO. 00TN09
SHEET NO. 168 OF 168

LAST SAVED BY: GHerrera

PROJECT NO. 204403-100000 FILE NAME: 204403_TN09.dwg