City of Thornton
12450 Washington Street
Thornton, CO 80229

THORNTON GROUNDWATER RECHARGE PROJECT

THORNTON PROJECT #-21-51
GROUNDWATER RECHARGE FACILITIES
WELD COUNTY, COLORADO

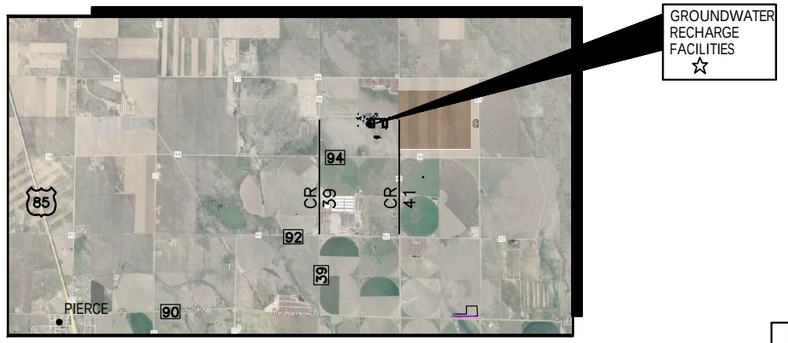

LOCATION MAP

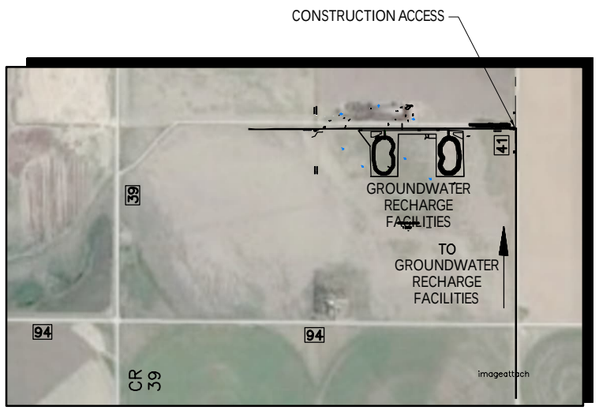

ENTRANCE TO PROJECT LOCATIONS

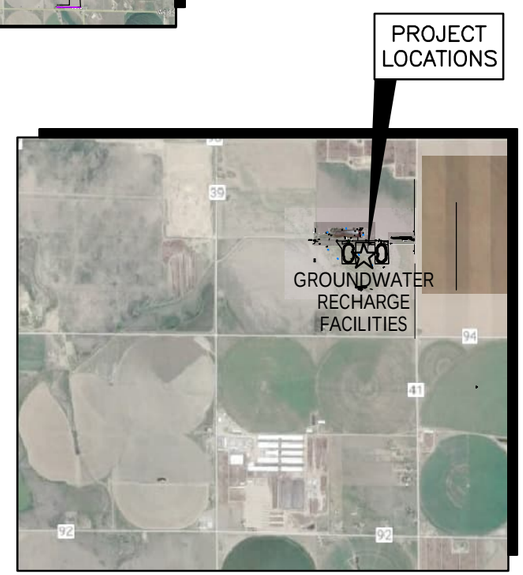

VICINITY MAP

GROUNDWATER RECHARGE FACILITIES

CONSTRUCTION ACCESS WILL BE FROM EAST SIDE.

FROM THE INTERSECTION OF CR 41 AND 94, PROCEED NORTH 1/2 MILE ON CR 41. TURN WEST ON DIRT ROAD TO EXISTING POND AND PROPOSED GROUND WATER RECHARGE FACILITIES.

APPROVALS

CITY OF THORNTON

CIVIL ENGINEER, MARSHALL DAVIS, PE — DATE

SENIOR WATER RESOURCES ADMINISTRATOR, ED LANYON — DATE

WATER QUALITY ANALYST II, MATT STOCKTON — DATE

PREPARED BY:

ERC
225 Union Blvd, STE 325
Lakewood, CO 80228
PH: 303.679.4820

SM&RC Structural Engineers Inc.
215 S. Wadsworth Blvd.
Suite 320 303.274.8656
Lakewood, CO 80226 f 303.484.3777

ISSUED FOR BID
NOT FOR CONSTRUCTION
SEPTEMBER 14, 2022

DRAWING LIST

SHEET NO.	DRAWING NO.	TITLE
1	–	COVER SHEET
2	G–1	ABBREVIATIONS, LEGEND AND GENERAL, DRAWING INDEX
3	G–2	REVEGETATION, ROAD EMBANKMENT AND POND NOTES
4	G–3	GENERAL ARRANGEMENT – SITE PLAN
5	G–4	EROSION, SEDIMENT AND GRADING – INITIAL PHASE
6	G–5	EROSION, SEDIMENT AND GRADING – INTERIM PHASE
7	G–6	EROSION, SEDIMENT AND GRADING – FINAL PHASE
8	G–7	EROSION, SEDIMENT AND GRADING – DETAILS
9	G–8	EROSION, SEDIMENT AND GRADING – DETAILS
10	C–1	CELL 1 GRADING PLAN
11	C–2	CELL 1 PROFILES – FILL CHANNEL, CELL AND SPILLWAY
12	C–3	CELL 2 GRADING PLAN
13	C–4	CELL 2 PROFILES – FILL CHANNEL, CELL AND SPILLWAY
14	C–5	TYPICAL CELL SECTION
15	C–6	SECTION 8 POND AND EAST POND GRADING PLANS
16	C–7	24" RCP CULVERT CROSSING – PLAN AND SECTIONS
17	C–8	TYPICAL RECHARGE CELL STILLING WELL DETAILS AND SECTION 8 POND STILLING WELL
18	C–9	TYPICAL RECHARGE CELL SPILLWAY – PLAN AND SECTIONS
19	C–10	SECTION 8 POND SPILWAY PLAN AND SECTIONS
20	C–11	SECTION 8 POND OUTLET STRUCTURAL – CIVIL PLAN AND SECITON
21	C–12	NEW CHANNEL PLAN AND PROFILE
22	S–1	STUCTURAL NOTES
23	S–2	CELL 1 – 4 WAY SPLITTER GATES – CONCRETE ONLINE PLAN AND SECTIONS
24	S–3	CELL 1 – 4 WAY SPLITTER GATES – CONCRETE REINFORCEMENT PLAN AND SECTIONS
25	S–4	CELL 2 – 2 WAY SPLITTER GATES CONCRETE ONLINE – PLAN AND SECTIONS
26	S–5	CELL 2 – 2 WAY SPLITTER GATES – CONCRETE REINFORCEMENT PLAN AND SECTIONS
27	S–6	SECTION 8 POND – OUTLET STRUCTURE CONCRETE OUTLINE – PLAN AND SECTION
28	S–7	SECTION 8 POND – OUTLET STRUCTURE – CONCRETE REINFORCEMENT PLAN AND SECTION
29	S–8	9" PARSHALL FLUME – CONCRETE OUTLINE PLAN AND SECTIONS
30	S–9	9" PARSHALL FLUME – CONCRETE REINFORCEMENT PLAN AND SECTIONS
31	S–10	SECTION 8 POND PARSHALL FLUME AND INTAKE – DEMOLITION PLAN
32	S–11	SECTION 8 POND PARSHALL FLUME AND INTAKE – IMPROVEMENT PLAN
33	S–12	CHANNEL HEAD WALL AND SLIDE GATE – PLAN AND SECTIONS
34	S–13	SECTION 8 POND PARSHALL FLUME – CHANNEL END CAP PLAN AND SECTION
35	S–14	DEMOLITION PLANS FOR SECTION 8 POND STRUCTURES & EAST POND SPLITTER BOX AND PIPE

LEGEND

CONCRETE

EXISTING GROUND

COMPACTED TYPE I FILL

RIPRAP

FILTER MATERIAL

CP–15
EL 5709.59 △ SURVEY CONTROL POINT

4500 EXISTING CONTOURS

4800 PROPOSED CONTOURS

EXISTING CONTOURS SHOWN FOR INFORMATION ONLY WITH NEW CONSTRUCTION CONTOURS

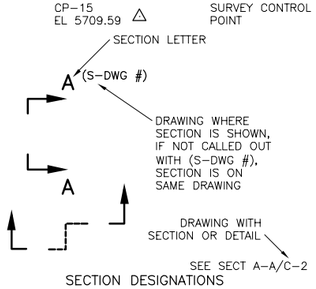

SECTION DESIGNATIONS

GENERAL NOTES

1. CALL UTILITY NOTIFICATION CENTER OF COLORADO AT 811 OR 1–800–922–1987 AT LEAST 48 HOURS BEFORE STRIPPING, OR EXCAVATING.
2. THE CONTRACTOR SHALL OBTAIN ALL NECESSARY PERMITS EXCLUDING ARMY CORPS 404 PERMIT, FROM REGULATORY AUTHORITIES NECESSARY TO PERFORM THE PROPOSED WORK A MINIMUM OF 48 HOURS BEFORE THE START OF CONSTRUCTION CONTRACTOR SHALL BE RESPONSIBLE FOR OBTAINING A WELD COUNTY GRADING PERMIT AND CDPS STORMWATER DISCHARGE PERMIT.
3. THE CONTRACTOR SHALL NOT SCALE DRAWINGS FOR CONSTRUCTION PURPOSES. ANY MISSING DIMENSIONS OR DISCREPANCIES IN THE DRAWINGS, SPECIFICATIONS OR PHYSICAL FEATURES SHALL BE BROUGHT TO THE ATTENTION OF THE ENGINEER FOR RESOLUTION. IF THE CONTRACTOR PROCEEDS PRIOR TO OBTAINING THE ENGINEERS RESOLUTION, HE DOES SO AT HIS OWN RISK.
4. OBSERVATIONS OF THE WORK IN PROGRESS AND ON–SITE VISITS BY THE ENGINEER OR OWNER ARE NOT TO BE CONSTRUED AS ACCEPTANCE OR WARRANTIES OF THE CONTRACTOR'S CONTRACTUAL OBLIGATIONS.
5. CONSTRUCTION SAFETY IS THE SOLE RESPONSIBILITY OF THE CONTRACTOR. THE ENGINEER IS NOT RESPONSIBLE FOR SAFETY IN, ON OR ABOUT THE PROJECT SITE, NOR FOR COMPLIANCE BY THE APPROPRIATE PARTY WITH ANY REGULATIONS RELATING THERETO.
6. THE CONTRACTOR SHALL MAINTAIN A SET OF THE CONSTRUCTION DRAWINGS AND SPECIFICATIONS ON SITE AT ALL TIMES. ONE SET OF THE CONSTRUCTION DRAWINGS SHALL BE MAINTAINED SOLELY TO DOCUMENT ANY CHANGES IN THE WORK AS A RESULT OF CHANGE ORDERS OR FIELD CONDITIONS THAT MAY REQUIRE ALTERNATIVE CONSTRUCTION DETAILS. ALL SUCH CHANGES SHALL BE MARKED ON A FULL SIZE RECORD SET OF DRAWINGS IN PERMANENT INK.
7. NOTIFY THE ENGINEER AT LEAST 48 HOURS IN ADVANCE OF ANY CONCRETE PLACEMENTS.
8. CONCRETE TESTS FOR CONCRETE DELIVERED TO THE SITE ARE THE RESPONSIBILITY OF THE CONTRACTOR. THE OWNER AND/OR ENGINEER RESERVES THE RIGHT TO CONDUCT ITS OWN TESTS OF DELIVERED CONCRETE AS HE MAY DEEM NECESSARY. OWNER WILL PAY FOR TESTING. CONTRACTOR WILL SCHEDULE.
9. THE CONTRACTOR IS RESPONSIBLE FOR SURVEYS TO LAYOUT AND CONSTRUCT THE WORK, AND FOR QUANTITY DETERMINATIONS FOR UNIT PRICE ITEMS.
10. EXCAVATIONS SHALL BE SHORED AS REQUIRED TO PREVENT SUBSIDENCE OR DAMAGE TO ADJACENT EXISTING STRUCTURES, STREETS, UTILITIES, ETC.
11. ALL MATERIALS AND WORKMANSHIP SHALL CONFORM TO THE INTERNATIONAL BUILDING CODE 2018 EDITION AS AMENDED BY THE STATE OF COLORADO AND LOCAL AGENCIES.
12. ALL FOUNDATION SURFACES SHALL BE INSPECTED BY THE ENGINEER PRIOR TO PLACEMENT OF GRANULAR FILL AND REINFORCING STEEL. NOTIFY ENGINEER AT LEAST TWO DAYS IN ADVANCE OF PLACING FILL OR OF SUBGRADE PREPARATION.
13. CONSTRUCTION SHORING AND BRACING OF FORMWORK SHALL BE IN ACCORDANCE WITH CHAPTER 4 OF ACI 301 "SPECIFICATIONS FOR STRUCTURAL CONCRETE FOR BUILDINGS" AND ACI 347 "RECOMMENDED PRACTICE FOR CONCRETE FORMWORK".
14. THE STRUCTURES SHOWN ON THE DRAWINGS HAVE BEEN DESIGNED FOR STABILITY UNDER FINAL CONDITIONS ONLY. THESE PLANS DO NOT INCLUDE THE NECESSARY COMPONENTS OR EQUIPMENT FOR THE STRUCTURES DURING CONSTRUCTION. THE CONTRACTOR IS RESPONSIBLE FOR ALL WORK RELATING TO CONSTRUCTION ERECTION METHODS, BRACING, SHORING, RIGGING, GUYS, SCAFFOLDING. FORMWORK, AND OTHER WORK AIDS REQUIRED TO SAFELY PERFORM THE WORK SHOWN.
15. THE INFORMATION ON THESE PLANS CONCERNING THE TYPE AND LOCATION OF UNDERGROUND UTILITIES IS NOT GUARANTEED TO BE ACCURATE OR ALL INCLUSIVE. THE CONTRACTOR IS RESPONSIBLE FOR MAKING HIS OWN DETERMINATION AS TO THE TYPE AND LOCATION OF UNDERGROUND UTILITIES AS MAY BE NECESSARY TO AVOID DAMAGE THERETO.

ABBREVIATIONS

ABC	AGGREGATE BASE COURSE	GR	GRADE
ADDL	ADDITIONAL	IE	INVERT ELEVATION
℄	CENTERLINE	MFG	MANUFACTURER
CLR	CLEAR	MAX	MAXIMUM
CONC	CONCRETE	MIN	MINIMUM
CP	CONTROL JOINT	NORTH	NORTH
CTR	CENTER	OPP	OPPOSITE
DIA	DIAMETER	ℙ	PLATE
DWG	DRAWING	REC	RECOMMENDATIONS
DWL	DOWEL	REQD	REQUIRED
E	EAST	SF	SQUARE FEET
EF	EACH FACE	SIM	SIMILAR
EL	ELEVATION	SST	STAINLESS STEEL
EMBKT	EMBANKMENT	STD	STANDARD
EQ SP	EQUAL SPACE	T&B	TOP AND BOTTOM
EXIST	EXISTING	(TYP)	TYPICAL
EW	EACH WAY	UN	UNLESS NOTED
GALV	GALVANIZED	W/	WITH

PROJECT CONTACT INFORMATION:

PROJECT OWNER:
CITY OF THORNTON
12450 WASHINGTON STREET
THORNTON, CO. 80241
PH. (720) 977–6210

ENGINEER:
ECOLOGICAL RESOURCE CONSULTANTS
225 UNION BLVD.
SUITE 325
LAKEWOOD, CO. 80228
PH. (303) 679–4820

STRUCTURAL ENGINEER:
SM&RC STRUCTURAL ENGINEERS
215 SOUTH WADSWORTH BLVD.
SUITE 320
LAKEWOOD, CO. 80226
PH. (303) 274–8656

HYDROGEOLOGIST:
HAHN WATER RESOURCES
6589 SOUTH ELAINE ROAD
EVERGREEN, CO. 80439
PH. (303) 870–5757

SURVEYOR:
ACKLAM, INC.
133 SOUTH 27TH AVE.
BRIGHTON, CO. 80601
PH. (303) 659–6267

REVISIONS

REV	DATE	DESCRIPTION	APPRV BY
	9/14/22	ISSUED FOR BID – NOT FOR CONSTRUCTION	JLB

0 1/2 1 2
2" AT FULL SIZE
SCALE ACCORDINGLY

CONSULTANTS:
ERC
225 Union Blvd, STE 325
Lakewood, CO 80228
PH: 303.679.4820

SM&RC Structural Engineers Inc.
215 S. Wadsworth Blvd., Suite 320
Lakewood, CO 80226
303.274.8656
f 303.484.3777

CLIENT:
City of Thornton
9500 Civic Center Drive
Thornton, CO 80229

THORNTON GROUNDWATER RECHARGE PROJECT TRIAL SITE

ABBREVIATIONS, LEGEND
GENERAL NOTES, DRAWING INDEX

SM&RC PROJECT NO. ERC–21–51
DESIGN BY: DAB
DRAWN BY: RH
CHECKED BY: DAB
DRAWING NO. G–1
SHEET: 2 OF 35

REVEGETATION NOTES

GENERAL

1. THE EROSION CONTROL AND REVEGETATION PLANS (G-4) COVERS SOIL PREPARATION, SEEDING, AND INSTALLATION OF EROSION CONTROL FABRICS IN REVEGETATION AREAS.
2. THE PLAN ADDRESSES WORK WITHIN THE LIMITS OF DISTURBANCE AS SHOWN ON THE DRAWINGS. HOWEVER, IF DISTURBANCE DOES OCCUR OUTSIDE OF THIS DESIGNATED AREA, THIS SECTION WILL ALSO PERTAIN TO THOSE AREAS WHICH HAVE BEEN DISTURBED.
3. AS DEPICTED IN THE DRAWINGS, ALL DISTURBED AREAS, NOT INCLUDING THE STRUCTURE ITSELF, SHALL BE PREPARED, SEEDED, COVERED WITH EROSION CONTROL FABRIC AND MAINTAINED.

SOIL PREPARATION

4. ALL AREAS TO BE SEEDED SHALL BE SMOOTH, FREE OF CLODS AND ROCKS (IN EXCESS OF THREE (3) INCHES IN DIAMETER) OR RUTS AND HAVE A FOUR (4) INCH MINIMUM UPPER LAYER OF LOOSE TOPSOIL.
5. THE UPPER FOUR (4) INCHES OF THE SEEDBED SHALL BE TILLED OR LOOSE. COMPACTED SOILS WILL BE RELIEVED BY SUBSOILING, RIPPING OR DEEP CHISELING. HARROWING, DICING OR OTHER OPERATIONS MAY BE REQUIRED TO BREAKDOWN LARGE SOIL CLODS GREATER THAN THREE (3) INCHES IN DIAMETER AND PROVIDE AN ACCEPTABLE SEEDBED.
6. THE UPPER FOUR (4) INCHES OF THE SEEDBED SHALL BE OF TOPSOIL QUALITY. TOPSOIL SHALL BE STRIPPED AND STOCKPILED ONSITE FOR REUSE,
7. IRREGULARITIES IN THE GROUND SURFACE RESULTING FROM SOIL PREPARATION OPERATIONS SHALL BE CORRECTED AND SLOPED TO DRAIN. IT SHALL BE CONFIRMED THAT ALL WORK IS RETURNED TO FINAL GRADE PER DRAWINGS, PRIOR TO SEEDING.

SEEDING

8. SEEDING SHALL NOT OCCUR DURING WINDY WEATHER OR WHEN GROUND IS FROZEN OR OTHERWISE UNTILLABLE, SUCH AS IN EXTREMELY WET OR DRY SOIL CONDITIONS.
9. SEED MIX SHALL BE PROVIDED PER SPECIFICATION 02950 2.1A.
10. USE TACKIFIED HYDROMULCH. SEE SECTION 02950 OF THE SPECIFICATIONS

CELL BERM NOTES:

1. CELL BERM FOUNDATION SHOULD BE CLEARED OF ALL TOPSOIL, VEGETATION, ORGANIC MATERIAL AND ANY OTHER UNSUITABLE MATERIALS.
2. CELL BERM FOUNDATION SHOULD BE SCARIFIED AND MOISTENED TO PROVIDE A BONDING SURFACE WITH THE FILL MATERIAL AND ELIMINATE ANY SMOOTH SURFACES.
3. CELL BERM FILL SHOULD CONSIST OF ONSITE GENERAL FILL MATERIAL AND BE FREE OF ANY TOPSOIL OR ORGANIC MATERIAL.
4. CELL BERM SHOULD BE PLACED IN MAXIMUM 9-INCH LOOSE LIFTS AND COMPACTED TO 95% OF MAXIMUM DRY DENSITY AT +/- 2% OF OPTIMUM MOISTURE CONTENT PER ASTM D698. SPOILS COMPACTION IS 90% PER SPECIFICATION 02300 3.10D.
5. CELL BERM SHOULD BE CONSTRUCTED WITH MAXIMUM OF 4:1 (H:V) SIDE SLOPES AND MINIMUM TOP WIDTH OF 16 FEET.

CELL NOTES:

1. ALL TOPSOIL AND VEGETATION SHOULD BE REMOVED FROM CELL GROUND SURFACE IN THE CELL LOCATION. CELL SHOULD BE EXCAVATED UNTIL CLEAN SAND OR GRAVEL IS VISIBLE ACROSS ENTIRE CELL AREA.
2. CELL EXCAVATION SHOULD REMAIN WITHIN CELL LIMITS SHOWN ON DRAWING.
3. AT NO TIME SHALL EXCAVATION SLOPES WITHIN THE CELL AREA EXCEED 3:1 (H:V).
4. IF EARTHWORK CUT-TO-FILL DOES NOT BALANCE, ADJUST FILL IN EAST POND PER ENGINEER'S DIRECTION.

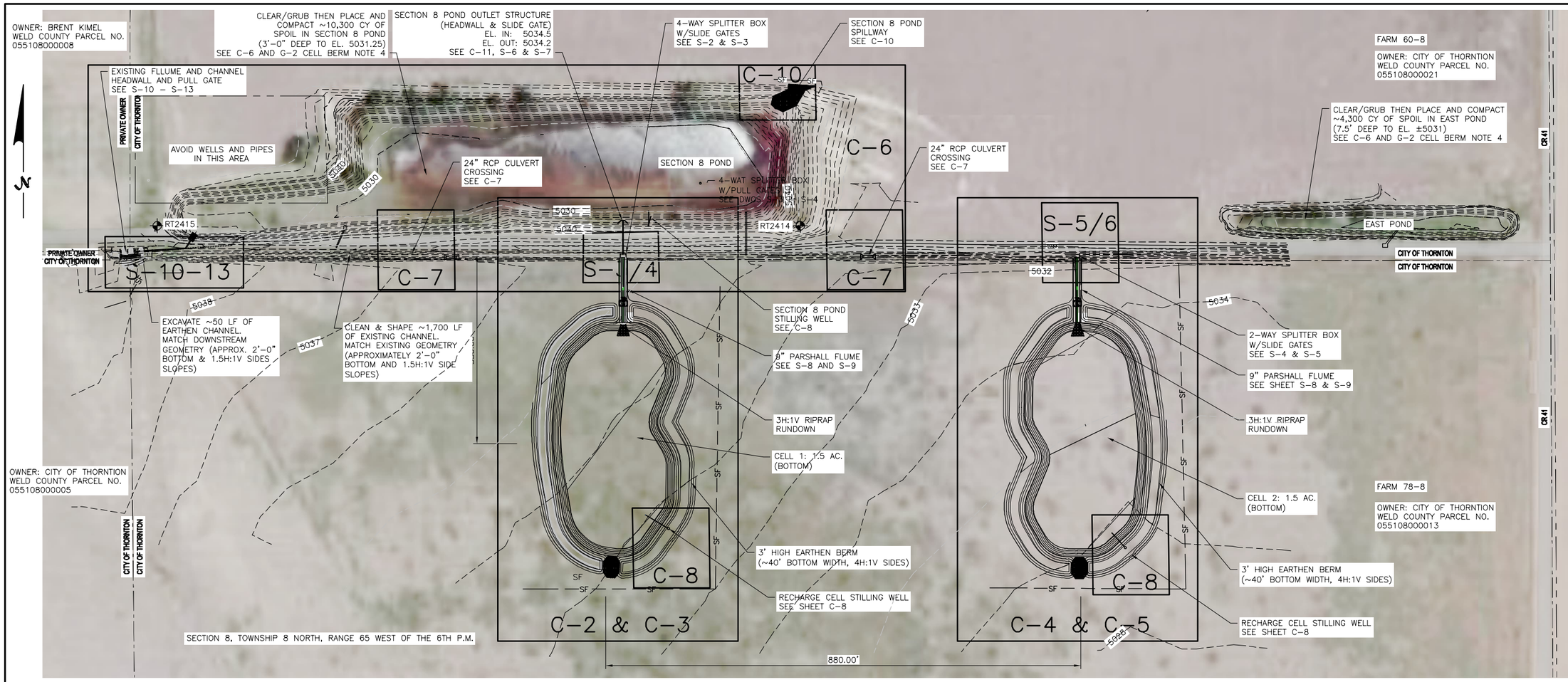

SURVEY NOTES:

1. THIS SURVEY WAS ESTABLISHED BY GPS OBSERVATIONS AND/OR THE ONLINE POSITIONING USER SERVICE OFFERED BY THE N.G.S. AND PROJECTED TO "COLORADO COORDINATE SYSTEM OF 1983, NORTH ZONE"
2. DISTANCES AND COORDINATES SHOWN HEREON ARE IN US SURVEY FEET GRID. THE COMBINED FACTOR USED TO OBTAIN GROUND DISTANCES IS 1.000254619.
3. CONTOURS AND ELEVATIONS SHOWN HEREON ARE BASED UPON THE NORTH AMERICAN VERTICAL DATUM OF 1988 (NAVD88)

TABLE A– SURVEY CONTROL POINT DATA

POINT#	NORTHING	EASTING	ELEVATION	DESCRIPTION	LATITUDE (DMS)	LONGITUDE (DMS)
RT2414	1487361.767	3220436.688	5052.92	#5 REBAR W/ PINK CAP	N40°40'06.56762"	W104°42'19.28686"
RT2415	1489956.760	3225628.512	5041.82	#5 REBAR W/ PINK CAP	N40°40'31.74343"	W104°41'11.60487"
RT2416	1489957.180	3226820.721	5044.76	#5 REBAR W/ PINK CAP	N40°40'31.63923"	W104°40'56.13222"

WALK–TO DIRECTIONS:

RT2414: POINT LIES +/- 32' NORTH OF WCR 94 AND +/-33' SOUTHEAST OF (PERPENDICULAR TO) THE IRRIGATION DITCH

RT2415: POINT LIES +/-20' NORTH OF THE NORTH EDGE OF A TWO-TRACK ROAD, +/-15' WEST OF THE TOP OF SLOPE OF THE SOUTHWEST END OF THE DETENTION POND.

RT2416: POINT LIES +/-26' NORTH OF THE NORTH EDGE OF A TWO-TRACK ROAD, +/-12' SOUTHEAST OF THE TOP OF SLOPE AT THE SOUTHEAST CORNER OF THE DETENTION POND.

CALL UTILITY NOTIFICATION CENTER OF COLORADO
1-800-922-1987
OR 303-232-1991
OR 8-1-1
CALL 2 BUSINESS DAYS (NOT INCLUDING INITIAL DAY OF CONTACT) IN ADVANCE BEFORE YOU DIG, GRADE, OR EXCAVATE FOR THE MARKING OF UNDERGROUND MEMBER UTILITIES.

RECHARGE CELLS SITE PLAN

SCALE: 1" = 100'

Recharge Cell 1
Stage-Storage Table

Elevation (ft)	Gage Height (ft)	Area (sq ft)	Area (ac)	Volume (cu ft)	Volume (ac-ft)	
5,028.0	0.0	1,449	0.0	0	0.0	
5,028.3	0.3	7,741	0.2	1,045	0.0	
5,028.5	0.5	15,829	0.4	3,931	0.1	
5,028.8	0.8	24,631	0.6	8,948	0.2	
5,029.0	1.0	34,250	0.8	16,276	0.4	
5,029.3	1.3	45,444	1.0	26,205	0.6	
5,029.5	1.5	55,856	1.3	38,845	0.9	
5,029.8	1.8	64,494	1.5	53,876	1.2	
5,030.0	2.0	68,712	1.6	70,524	1.6	
5,030.3	2.3	69,502	1.6	87,800	2.0	
5,030.5	2.5	70,297	1.6	105,275	2.4	
5,030.8	2.8	71,094	1.6	122,949	2.8	
5,031.0	3.0	71,895	1.7	140,822	3.2	
5,031.3	3.3	72,700	1.7	158,897	3.6	
5,031.5	3.5	73,508	1.7	177,173	4.1	
5,031.8	3.8	74,320	1.7	195,651	4.5	
5,032.0	4.0	75,135	1.7	214,333	4.9	
5,032.3	4.3	75,954	1.7	233,219	5.4	
5,032.5	4.5	76,776	1.8	252,310	5.8	
5,032.8	4.8	77,602	1.8	271,607	6.2	
5,033.0	5.0	78,360	1.8	298,952	6.9	
5,033.1	5.1	78,630	1.8	306,801	7.0	Spillway Crest

Recharge Cell 2
Stage-Storage Table

Elevation (ft)	Gage Height (ft)	Area (sq ft)	Area (ac)	Volume (cu ft)	Volume (ac-ft)	
5,024.0	0.0	2,249	0.1	0	0.0	
5,024.3	0.3	9,374	0.2	1,351	0.0	
5,024.5	0.5	18,675	0.4	4,791	0.1	
5,024.8	0.8	28,054	0.6	10,593	0.2	
5,025.0	1.0	36,389	0.8	18,626	0.4	
5,025.3	1.3	43,954	1.0	28,654	0.7	
5,025.5	1.5	53,136	1.2	40,772	0.9	
5,025.8	1.8	62,204	1.4	55,174	1.3	
5,026.0	2.0	67,370	1.5	71,367	1.6	
5,026.3	2.3	69,367	1.6	88,458	2.0	
5,026.5	2.5	70,190	1.6	105,903	2.4	
5,026.8	2.8	70,984	1.6	123,549	2.8	
5,027.0	3.0	71,781	1.6	141,395	3.2	
5,027.3	3.3	72,582	1.7	159,440	3.7	
5,027.5	3.5	73,387	1.7	177,686	4.1	
5,027.8	3.8	74,195	1.7	196,134	4.5	
5,028.0	4.0	75,007	1.7	214,784	4.9	
5,028.3	4.3	75,822	1.7	233,638	5.4	
5,028.5	4.5	76,640	1.8	252,695	5.8	
5,028.8	4.8	77,462	1.8	271,958	6.2	
5,029.0	5.0	78,215	1.8	291,417	6.7	
5,029.1	5.1	78,494	1.8	299,253	6.9	Spillway Crest

NOTE:

ALL CONSTRUCTION AND DISTURBANCE MUST REMAIN WITHIN DITCH PRESCRIPTIVE EASEMENT.

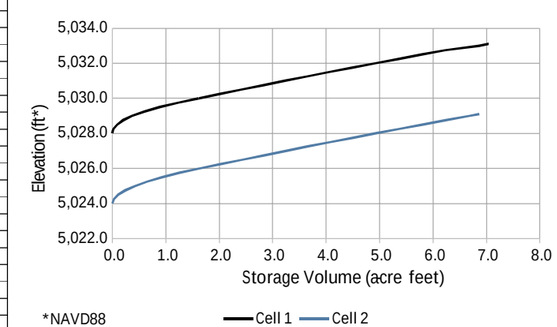

REV	DATE	DESCRIPTION	APPRVD BY
	9/14/22	ISSUED FOR BID – NOT FOR CONSTRUCTION	JLB

0 1/2 1 2
2" AT FULL SIZE SCALE ACCORDINGLY

CONSULTANTS:
ERC
225 Union Blvd, STE 325
Lakewood, CO 80228
PH: 303.679.4820

SMRC Structural Engineers Inc.
215 S. Wadsworth Blvd., Suite 320
Lakewood, CO 80226
303.274.8656
f 303.484.3777

CLIENT:
City of Thornton
9500 Civic Center Drive
Thornton, CO 80229

THORNTON GROUNDWATER RECHARGE PROJECT TRIAL SITE

GENERAL ARRANGEMENT SITE PLAN

SMRC PROJECT NO. ERC-21-51
DESIGN BY: DAB
DRAWN BY: RH
CHECKED BY: DAB
DRAWING NO. G-3
SHEET: 4 OF 35

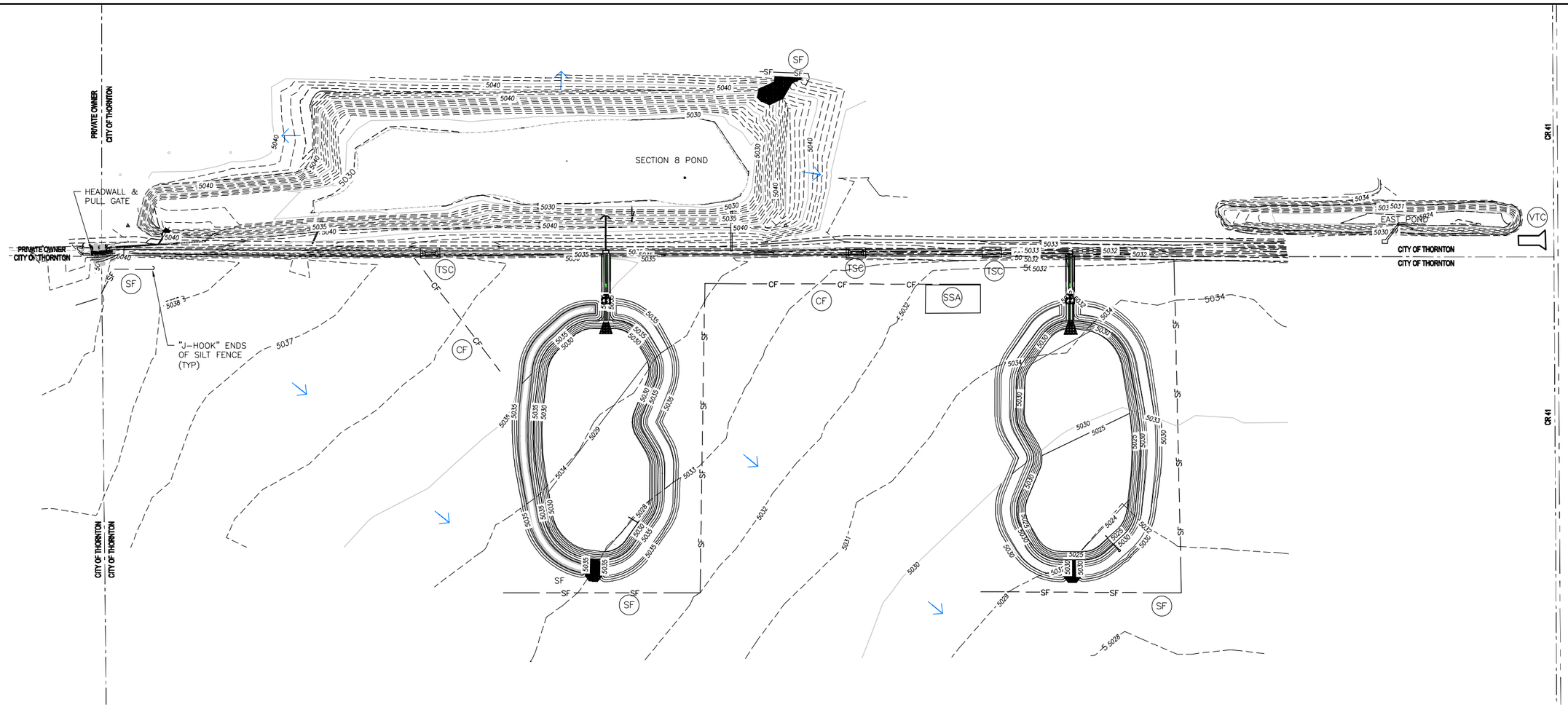

RECHARGE CELLS SITE INITIAL EROSION CONTROL PLAN
SCALE: 1"=100'

BMP LEGEND

— CF —	CONSTRUCTION FENCE
— SF —	SILT FENCE
SSA	STABILIZED STAGING AREA
SR	SURFACE ROUGHENING
TSC	TEMPORARY STREAM CROSSING
VTC	VEHICLE TRACKING CONTROL
SP	STOCKPILE MANAGEMENT
CWA	CONCRETE WASHOUT AREA
SM	SEEDING AND MULCHING

PRE-EXCAVATION CHECKLIST

- ☐ GAS AND OTHER UTILITY LINES OF RECORD SHOWN ON PLANS.
- ☐ UTILITIES CENTRAL LOCATING CALLED AT LEAST 2 BUSINESS DAYS AHEAD.
- ☐ UTILITIES LOCATED AND MARKED.
- ☐ EMPLOYEES BRIEFED ON MARKING AND COLOR CODES.*
- ☐ EMPLOYEES TRAINED ON EXCAVATION AND SAFETY PROCEDURES FOR NATURAL GAS LINES.
- ☐ WHEN EXCAVATION APPROACHES GAS LINES, EMPLOYEES EXPOSE LINES BY CAREFUL PROBING AND HAND DIGGING.

*A.G.A./A.P.W.A. STANDARD UTILITY MARKING COLOR CODE

NATURAL GAS	YELLOW	WATER	BLUE
ELECTRIC	RED	WASTEWATER	GREEN

811
Know what's below.
Call before you dig.

REVISIONS			
	9/14/22	ISSUED FOR BID – NOT FOR CONSTRUCTION	JLB
REV	DATE	DESCRIPTION	APPRVD BY

0 1/2 1 2
2" AT FULL SIZE
SCALE ACCORDINGLY

CONSULTANTS:

ERC
225 Union Blvd, STE 325
Lakewood, CO 80228
PH: 303.679.4820

SMRC Structural Engineers Inc.
215 S. Wadsworth Blvd., Suite 320
Lakewood, CO 80226
303.274.8656
f 303.484.3777

CLIENT:

City of Thornton
9500 Civic Center Drive
Thornton, CO 80229

THORNTON GROUNDWATER RECHARGE PROJECT TRIAL SITE

EROSION AND SEDIMENT CONTROL PLAN
INITIAL PHASE

SMRC PROJECT NO.	ERC-21-51
DESIGN BY:	DAB
DRAWN BY:	RH
CHECKED BY:	DAB
DRAWING NO.	G-4
SHEET:	5 OF 35

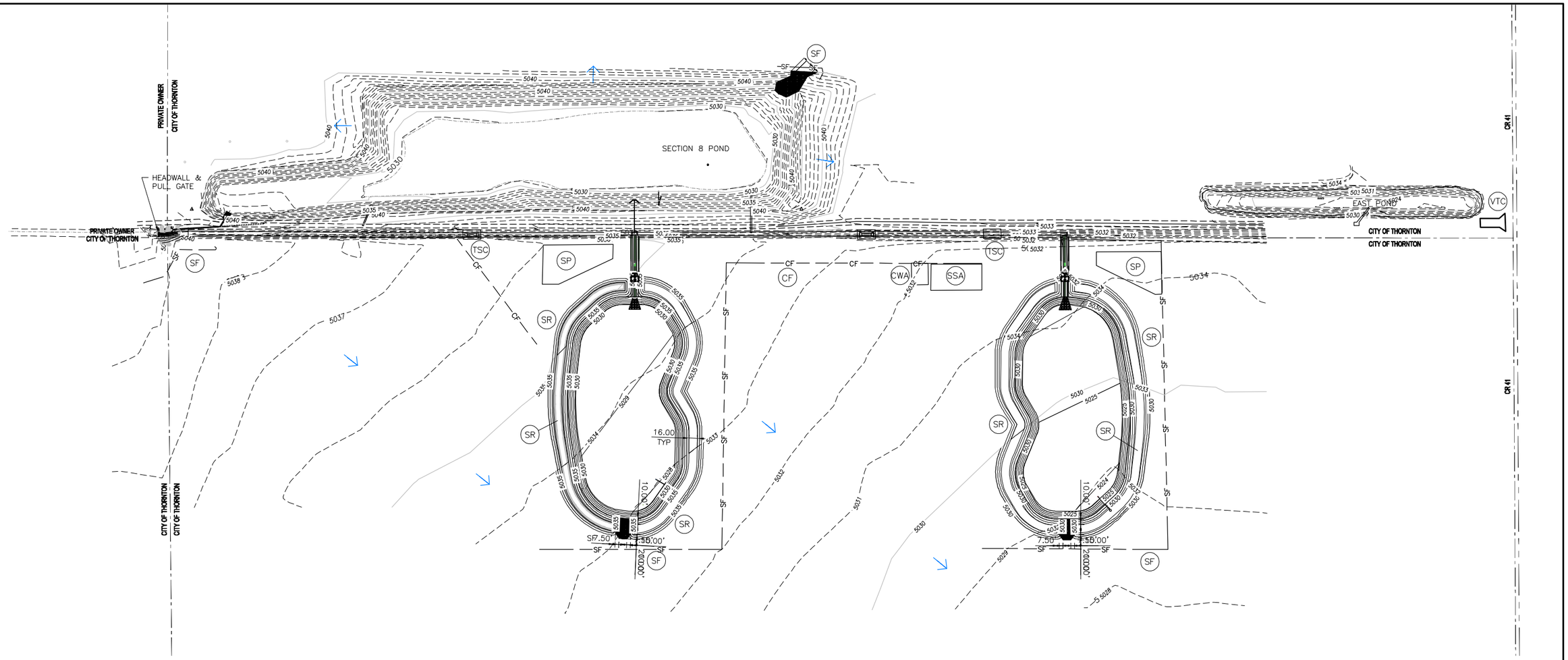

RECHARGE CELLS SITE INTERIM EROSION CONTROL PLAN

SCALE: 1"=100'

BMP LEGEND

— CF —	CF	CONSTRUCTION FENCE
— SF —	SF	SILT FENCE
	SSA	STABILIZED STAGING AREA
	SR	SURFACE ROUGHENING
	TSC	TEMPORARY STREAM CROSSING
	VTC	VEHICLE TRACKING CONTROL
	SP	STOCKPILE MANAGEMENT
	CWA	CONCRETE WASHOUT AREA
	SM	SEEDING AND MULCHING

PRE-EXCAVATION CHECKLIST

- ☐ GAS AND OTHER UTILITY LINES OF RECORD SHOWN ON PLANS.
- ☐ UTILITIES CENTRAL LOCATING CALLED AT LEAST 2 BUSINESS DAYS AHEAD
- ☐ UTILITIES LOCATED AND MARKED.
- ☐ EMPLOYEES BRIEFED ON MARKING AND COLOR CODES.*
- ☐ EMPLOYEES TRAINED ON EXCAVATION AND SAFETY PROCEDURES FOR NATURAL GAS LINES.
- ☐ WHEN EXCAVATION APPROACHES GAS LINES, EMPLOYEES EXPOSE LINES BY CAREFUL PROBING AND HAND DIGGING

*A.G.A./A.P.W.A. STANDARD UTILITY MARKING COLOR CODE

NATURAL GAS	YELLOW	WATER	BLUE
ELECTRIC	RED	WASTEWATER	GREEN

811 Know what's below. Call before you dig.

REVISIONS			
REV	DATE	DESCRIPTION	APPRVD BY
	9/14/22	ISSUED FOR BID – NOT FOR CONSTRUCTION	JLB

0 1/2 1 2
2" AT FULL SIZE
SCALE ACCORDINGLY

CONSULTANTS:

ERC
225 Union Blvd, STE 325
Lakewood, CO 80228
PH: 303.679.4820

SMRC Structural Engineers Inc.
215 S. Wadsworth Blvd., Suite 320
Lakewood, CO 80226
303.274.8656
f 303.484.3777

CLIENT:

City of Thornton
9500 Civic Center Drive
Thornton, CO 80229

THORNTON GROUNDWATER RECHARGE PROJECT TRIAL SITE

EROSION AND SEDIMENT CONTROL PLAN
INTERIM PHASE

SMRC PROJECT NO.	ERC-21-51
DESIGN BY:	DAB
DRAWN BY:	RH
CHECKED BY:	DAB
DRAWING NO.	G-5
SHEET:	6 OF 35

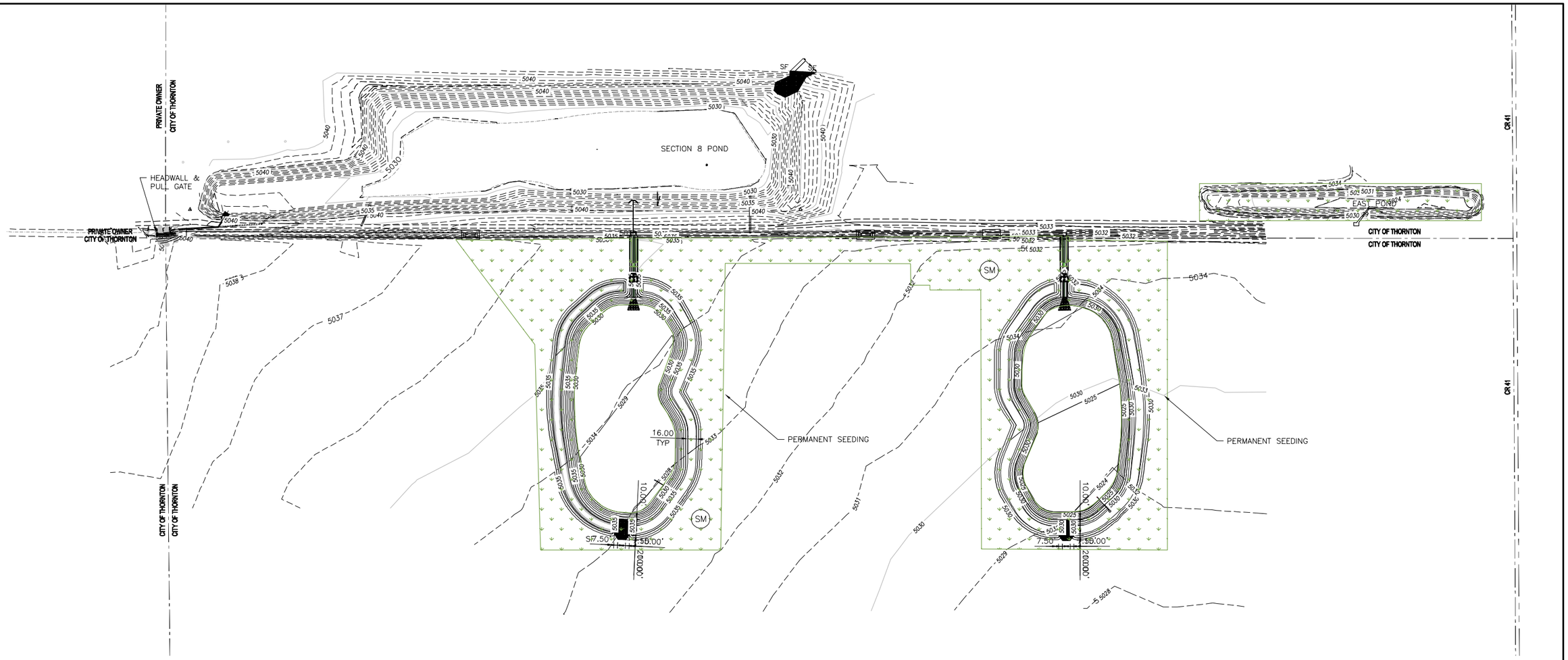

RECHARGE CELLS SITE FINAL EROSION CONTROL PLAN
SCALE: 1"=100'

BMP LEGEND

— CF —	CF	CONSTRUCTION FENCE
— SF —	SF	SILT FENCE
	SSA	STABILIZED STAGING AREA
	SR	SURFACE ROUGHENING
	TSC	TEMPORARY STREAM CROSSING
	VTC	VEHICLE TRACKING CONTROL
	SP	STOCKPILE MANAGEMENT
	CWA	CONCRETE WASHOUT AREA
	SM	SEEDING AND MULCHING

PRE-EXCAVATION CHECKLIST

- ☐ GAS AND OTHER UTILITY LINES OF RECORD SHOWN ON PLANS.
- ☐ UTILITIES CENTRAL LOCATING CALLED AT LEAST 2 BUSINESS DAYS AHEAD
- ☐ UTILITIES LOCATED AND MARKED.
- ☐ EMPLOYEES BRIEFED ON MARKING AND COLOR CODES.*
- ☐ EMPLOYEES TRAINED ON EXCAVATION AND SAFETY PROCEDURES FOR NATURAL GAS LINES.
- ☐ WHEN EXCAVATION APPROACHES GAS LINES, EMPLOYEES EXPOSE LINES BY CAREFUL PROBING AND HAND DIGGING.

*A.G.A./A.P.W.A. STANDARD UTILITY MARKING COLOR CODE

NATURAL GAS	YELLOW	WATER	BLUE
ELECTRIC	RED	WASTEWATER	GREEN

811
Know what's below.
Call before you dig.

REVISIONS

REV	DATE	DESCRIPTION	APPRVD BY
	9/14/22	ISSUED FOR BID – NOT FOR CONSTRUCTION	JLB

0 1/2 1 2
2" AT FULL SIZE
SCALE ACCORDINGLY

CONSULTANTS:

ERC
225 Union Blvd, STE 325
Lakewood, CO 80228
PH: 303.679.4820

SMRC Structural Engineers Inc.
215 S. Wadsworth Blvd., Suite 320
Lakewood, CO 80226
303.274.8656
f 303.484.3777

CLIENT:

City of Thornton
9500 Civic Center Drive
Thornton, CO 80229

THORNTON GROUNDWATER RECHARGE PROJECT TRIAL SITE

EROSION AND SEDIMENT CONTROL PLAN
FINAL PHASE

SMRC PROJECT NO.	ERC-21-51
DESIGN BY:	DAB
DRAWN BY:	RH
CHECKED BY:	DAB
DRAWING NO.	G-6
SHEET:	7 OF 35

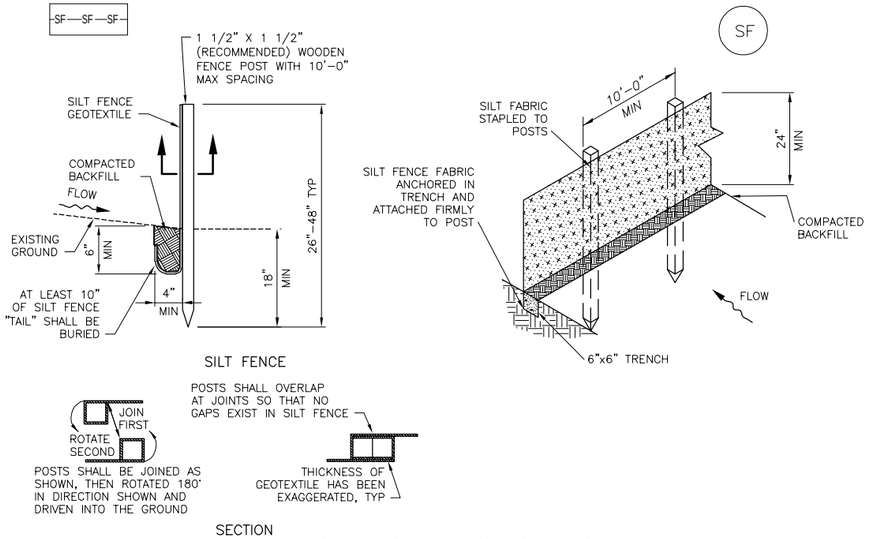

SF-1. SILT FENCE DETAILS
NOT TO SCALE

SILT FENCE INSTALLATION NOTES

1. SEE SPECIFICATIONS OR MHFD CRITERIA MANUAL FOR NOTES

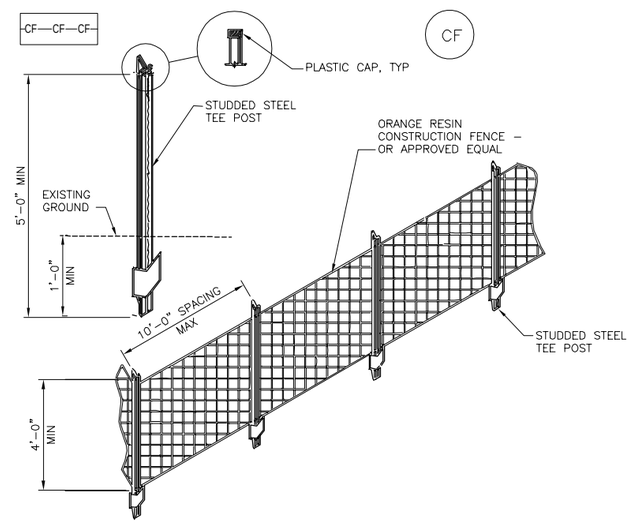

CF-1. CONSTRUCTION FENCE DETAILS
NOT TO SCALE

CONSTRUCTION FENCE INSTALLATION NOTES

1. SEE SPECIFICATIONS OR MHFD CRITERIA MANUAL FOR NOTES

EROSION CONTROL NOTES:

1. SCALE AS NOTED.
2. SEE DRAWING G-1 AND G-2 FOR GENERAL NOTES, LEGEND AND ABBREVIATIONS.
3. SILT FENCE OR WATTLES TO BE INSTALLED AT TOE OF ANY DISTURBED SLOPES THAT DRAIN AWAY FROM THE PROJECT.
4. EROSION CONTROL MEASURES SHALL BE INSTALLED PRIOR TO GRADING ACTIVITIES.
5. AT ALL TIMES DURING CONSTRUCTION, ALL TEMPORARY AND PERMANENT EROSION AND SEDIMENT CONTROL MEASURES SHALL BE MAINTAINED AND REPAIRED AS NEEDED TO PREVENT ACCELERATED EROSION ON THE SITE AND ADJACENT PROPERTIES.
6. ALL TOPSOIL SHALL BE SALVAGED. TOPSOIL AND OVERBURDEN SHALL BE REDISTRIBUTED WITHIN THE GRADED AREA AFTER ROUGH GRADING TO PROVIDE A SUITABLE BASE FOR AREAS WHICH WILL BE SEEDED AND PLANTED. RUNOFF FROM STOCKPILED AREAS SHALL BE CONTROLLED TO PREVENT EROSION.
7. FINAL STABILIZATION MEASURES SHALL BE APPLIED WITHIN 30 DAYS TO DISTURBED AREAS WHICH MAY NOT BE AT FINAL GRADE, BUT WILL BE LEFT DORMANT FOR LONGER THAN 60 DAYS.
8. FUGITIVE DUST EMISSIONS RESULTING FROM GRADING ACTIVITIES AND/OR WIND SHALL BE CONTROLLED AT THE TIME OF GRADING USING THE BEST AVAILABLE TECHNOLOGIES AS DEFINED BY THE COLORADO DEPARTMENT OF PUBLIC HEALTH AND ENVIRONMENT.
9. ALL SEEDED AREAS SHALL BE COVERED WITH EROSION CONTROL FABRIC OR HYDROMULCH PER ECSP DRAWINGS AND SPECIFICATIONS WITHIN 48 HOURS OF SEEDING.

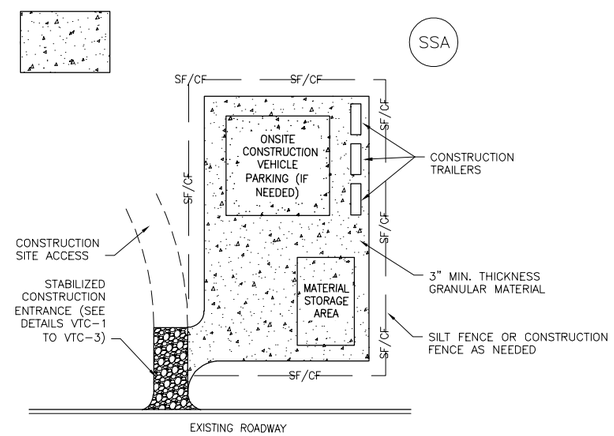

SSA-1. STABILIZED STAGING AREA
NOT TO SCALE

STABILIZED STAGING AREA INSTALLATION NOTES

1. SEE SPECIFICATIONS OR MHFD CRITERIA MANUAL FOR NOTES

REVISIONS			
REV	DATE	DESCRIPTION	APPRVD BY
	9/14/22	ISSUED FOR BID – NOT FOR CONSTRUCTION	JLB

0 1/2 1 2
2" AT FULL SIZE SCALE ACCORDINGLY

CONSULTANTS:
ERC
225 Union Blvd, STE 325
Lakewood, CO 80228
PH: 303.679.4820

SMRC Structural Engineers Inc.
215 S. Wadsworth Blvd., Suite 320
Lakewood, CO 80226
303.274.8656
f 303.484.3777

CLIENT:
City of Thornton
9500 Civic Center Drive
Thornton, CO 80229

THORNTON GROUNDWATER RECHARGE PROJECT TRIAL SITE

OVERALL POND
EROSION CONTROL DETAILS

SMRC PROJECT NO. ERC-21-51
DESIGN BY: DAB
DRAWN BY: RH
CHECKED BY: DAB
DRAWING NO. G-7
SHEET: 8 OF 35

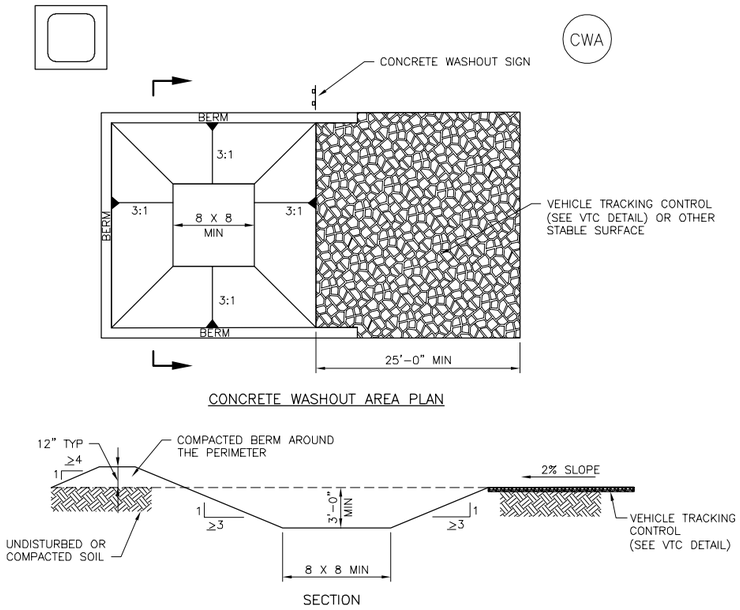

CWA–1. CONCRETE WASHOUT AREA
NOT TO SCALE

CONCRETE WASHOUT INSTALLATION NOTES

1. SEE SPECIFICATIONS OR MHFD CRITERIA MANUAL FOR NOTES

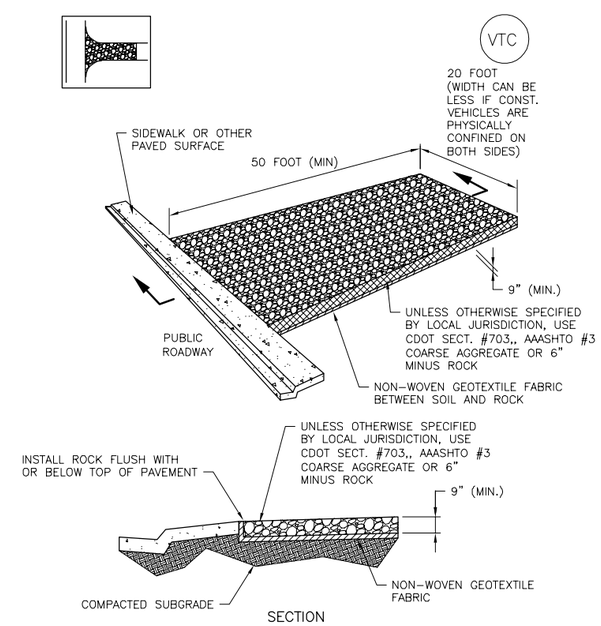

VTC–1. AGGREGATE VEHICLE TRACKING CONTROL
NOT TO SCALE

AGGREGATE VEHICLE TRACKING CONTROL INSTALLATION NOTES

1. SEE SPECIFICATIONS OR MHFD CRITERIA MANUAL FOR NOTES

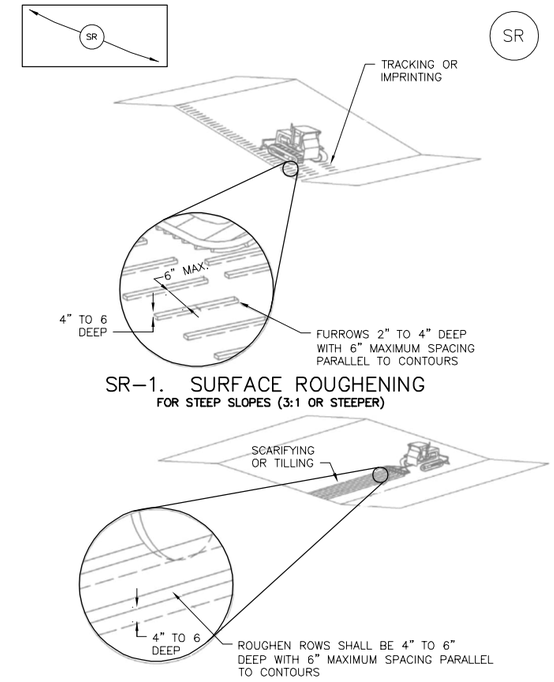

SR–1. SURFACE ROUGHENING
FOR STEEP SLOPES (3:1 OR STEEPER)

SR–2. SURFACE ROUGHENING
FOR LOW SLOPES (LESS THAN 3:1)

SURFACE ROUGHENING INSTALLATION NOTES

1. SEE SPECIFICATIONS OR MHFD CRITERIA MANUAL FOR NOTES

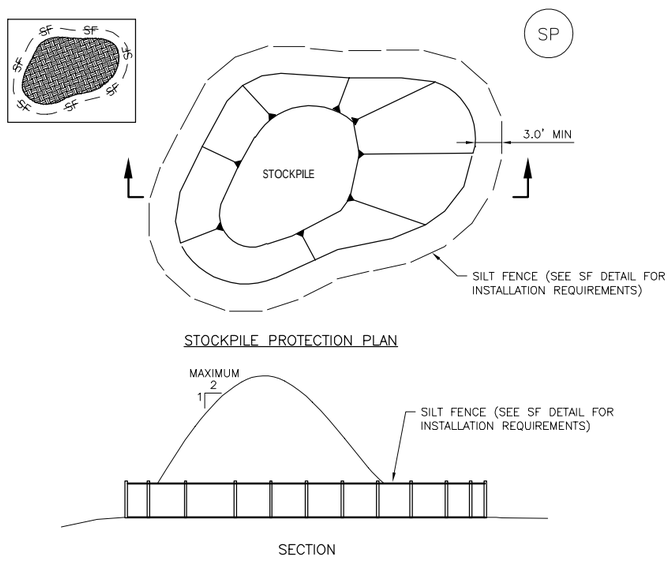

SP–1. STOCKPILE PROTECTION
NOT TO SCALE

STOCKPILE PROTECTION INSTALLATION NOTES

1. SEE SPECIFICATIONS OR MHFD CRITERIA MANUAL FOR NOTES

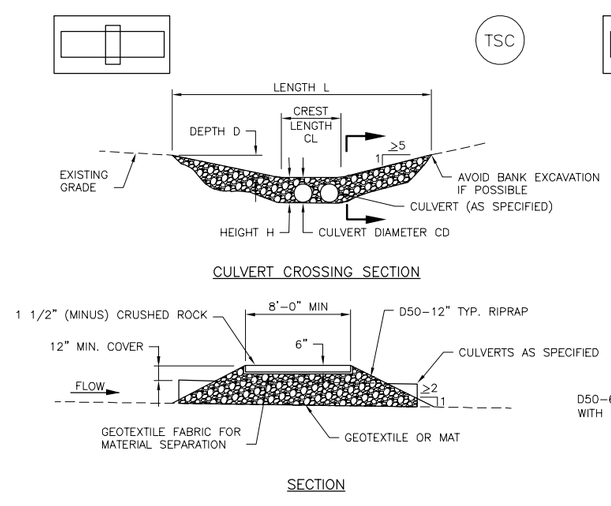

TSC–1. CULVERT CROSSING
NOT TO SCALE

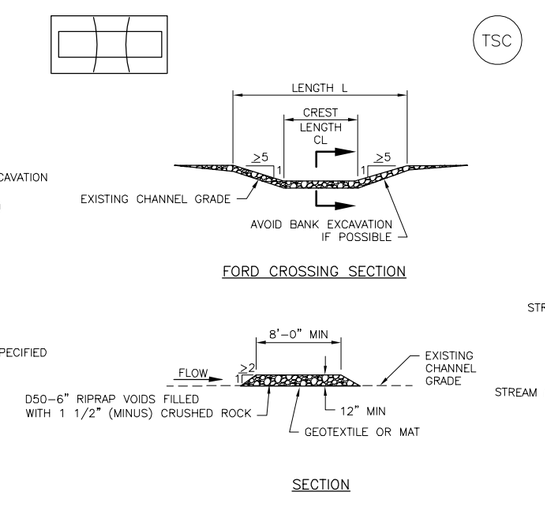

TSC–2. FORD CROSSING
NOT TO SCALE

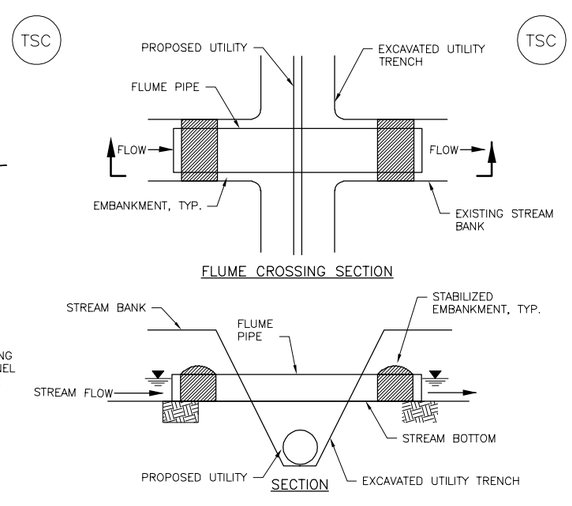

TSC–3. FLUME CROSSING
NOT TO SCALE

TEMPORARY STREAM CROSSING INSTALLATION NOTES

REVISIONS			
	9/14/22	ISSUED FOR BID – NOT FOR CONSTRUCTION	JLB
REV	DATE	DESCRIPTION	APPRVD BY

0 1/2 1 2
2" AT FULL SIZE
SCALE ACCORDINGLY

CONSULTANTS:

ERC
225 Union Blvd., STE 325
Lakewood, CO 80228
PH: 303.679.4820

SMRC Structural Engineers Inc.
215 S. Wadsworth Blvd.,
Suite 320
Lakewood, CO 80226
303.274.8656
f 303.484.3777

CLIENT:

City of Thornton
9500 Civic Center Drive
Thornton, CO 80229

THORNTON GROUNDWATER RECHARGE PROJECT TRIAL SITE

OVERALL POND
EROSION CONTROL DETAILS

SMRC PROJECT NO. ERC–21–51
DESIGN BY: DAB
DRAWN BY: RH
CHECKED BY: DAB
DRAWING NO. G–8
SHEET: 9 OF 35

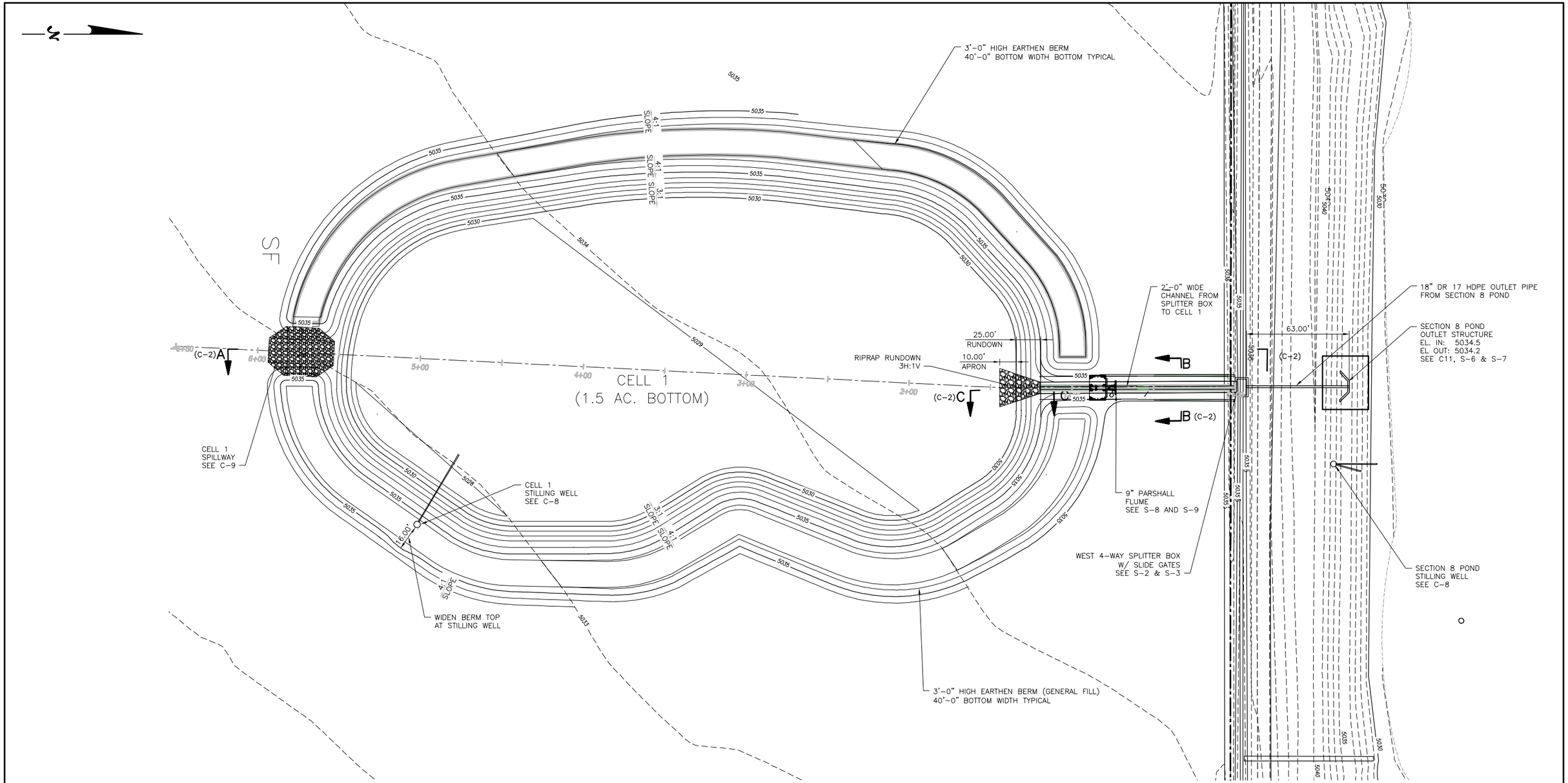

CELL 1 GRADING PLAN
SCALE: 1" = 30'

CALL UTILITY NOTIFICATION
CENTER OF COLORADO
1-800-922-1987
OR 303-232-1991
OR 8-1-1
CALL 2 BUSINESS DAYS (NOT INCLUDING INITIAL DAY OF CONTACT) IN ADVANCE BEFORE YOU DIG, GRADE, OR EXCAVATE FOR THE MARKING OF UNDERGROUND MEMBER UTILITIES.

REVISIONS

REV	DATE	DESCRIPTION	APPRVD BY
	9/14/22	ISSUED FOR BID – NOT FOR CONSTRUCTION	JLB

0 1/2 1 2
2" AT FULL SIZE
SCALE ACCORDINGLY

CONSULTANTS:

ERC
225 Union Blvd, STE 325
Lakewood, CO 80228
PH: 303.679.4820

SMRC Structural Engineers Inc.
215 S. Wadsworth Blvd., Suite 320
Lakewood, CO 80226
303.274.8656
f 303.484.3777

CLIENT:

City of Thornton
9500 Civic Center Drive
Thornton, CO 80229

THORNTON GROUNDWATER RECHARGE PROJECT TRIAL SITE

CELL 1
GRADING PLAN

SMRC PROJECT NO. ERC-21-51
DESIGN BY: DAB
DRAWN BY: RH
CHECKED BY: DAB
DRAWING NO. C-1
SHEET: 10 OF 35

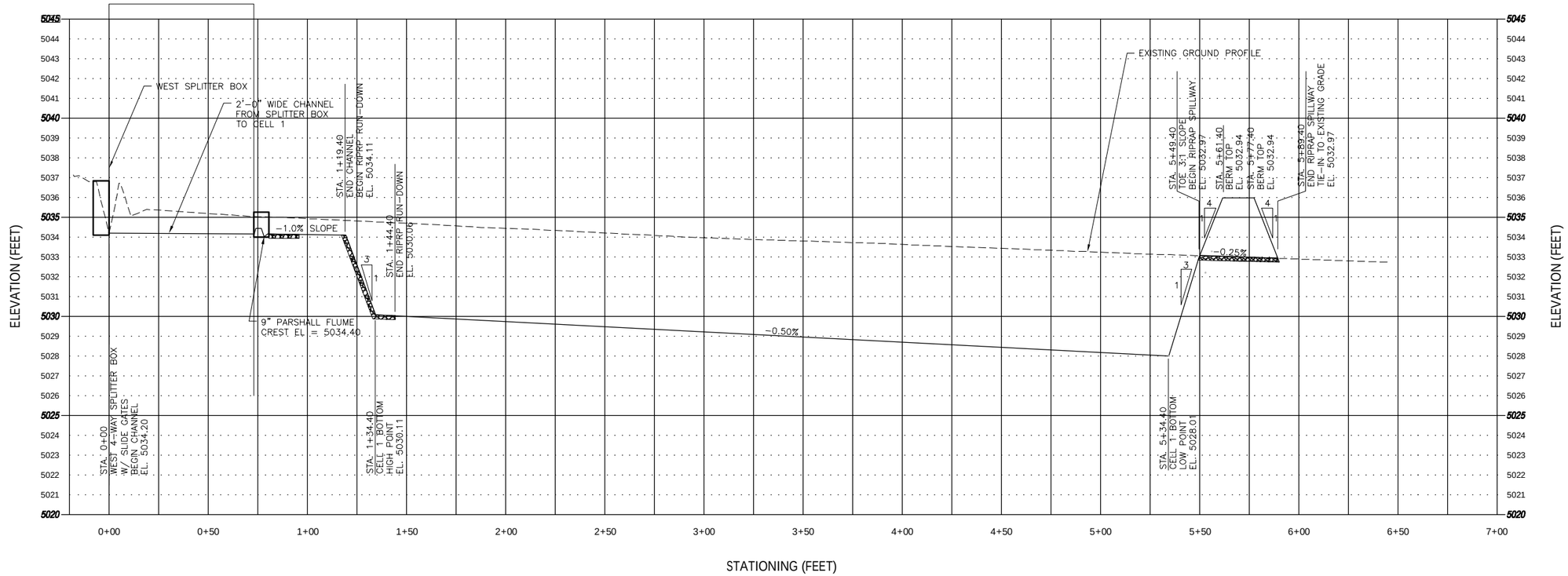

LOCATION	STATION	PR INVERT ELEVATION
FLUME RAMP	0+73.00	5034.15
FLUME CREST	0+76.83	5034.40
FLUME EXIT	0+80.33	5034.15

CROSS SECTION A – STATION ALONG CELL 1 CENTERLINE

(STA 0+00 TO STA 6+00)
VERT SCALE: 1"=3'
HORIZ SCALE: 1"=30'

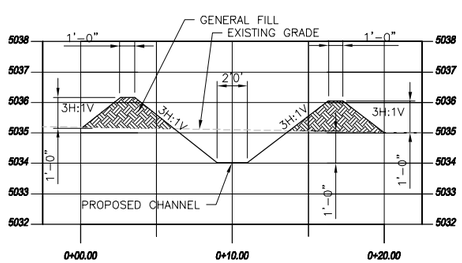

CROSS SECTION B – ALONG 2'-0" CHANNEL AT CELL 1

VERT SCALE: 1"=2.5'
HORIZ SCALE: 1"=5'

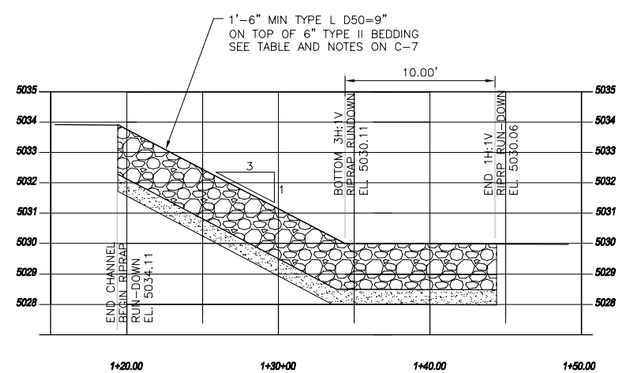

CROSS SECTION C – ALONG CELL 1 RIPRAP RUNDOWN

VERT SCALE: 1"=2.5'
HORIZ SCALE: 1"=5'

NOTE:

SEE PROFILE A THIS SHEET STATIONING AND ADDITIONAL INFORMATION

REV	DATE	DESCRIPTION	APPRVD BY
	9/14/22	ISSUED FOR BID – NOT FOR CONSTRUCTION	JLB

REVISIONS

0 1/2 1 2
2" AT FULL SIZE
SCALE ACCORDINGLY

CONSULTANTS:

ERC
225 Union Blvd, STE 325
Lakewood, CO 80228
PH: 303.679.4820

SMRC Structural Engineers Inc.
215 S. Wadsworth Blvd., Suite 320
Lakewood, CO 80226
303.274.8656
f 303.484.3777

CLIENT:

City of Thornton
9500 Civic Center Drive
Thornton, CO 80229

THORNTON GROUNDWATER RECHARGE PROJECT TRIAL SITE

CELL 1 PROFILES
FILL CHANNEL, CELL AND SPILLWAY

SMRC PROJECT NO. ERC-21-51
DESIGN BY: DAB
DRAWN BY: RH
CHECKED BY: DAB
DRAWING NO. C-2
SHEET: 11 OF 35

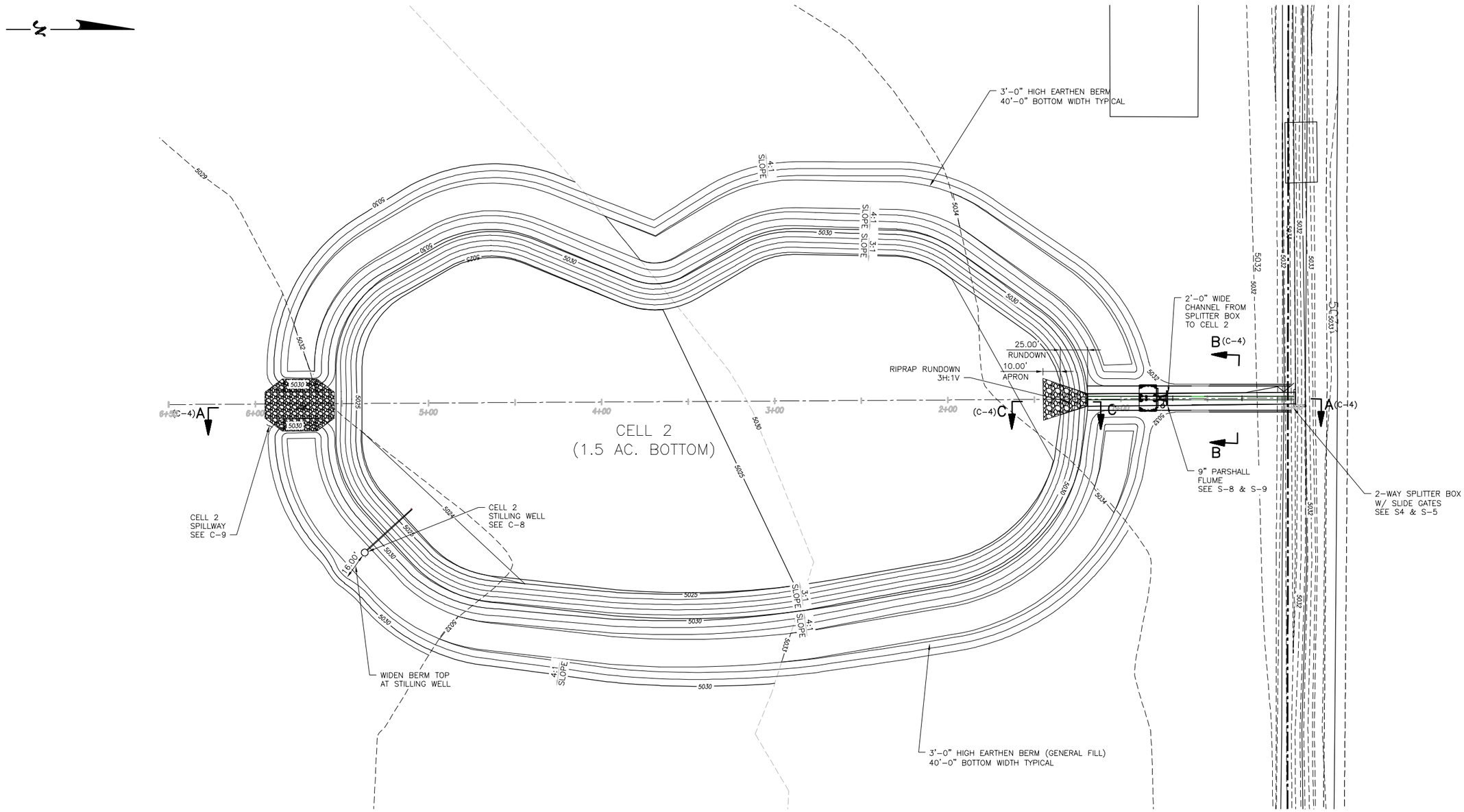

CELL 2 GRADING PLAN

SCALE: 1" = 30'

CALL UTILITY NOTIFICATION CENTER OF COLORADO
1-800-922-1987
OR 303-232-1991
OR 8-1-1
CALL 2 BUSINESS DAYS (NOT INCLUDING INITIAL DAY OF CONTACT) IN ADVANCE BEFORE YOU DIG, GRADE, OR EXCAVATE FOR THE MARKING OF UNDERGROUND MEMBER UTILITIES.

REVISIONS			
	9/14/22	ISSUED FOR BID – NOT FOR CONSTRUCTION	JLB
REV	DATE	DESCRIPTION	APPRVD BY

0 1/2 1 2
2" AT FULL SIZE
SCALE ACCORDINGLY

CONSULTANTS:
ERC
225 Union Blvd, STE 325
Lakewood, CO 80228
PH: 303.679.4820

SMRC Structural Engineers Inc.
215 S. Wadsworth Blvd., Suite 320
Lakewood, CO 80226
303.274.8656
f 303.484.3777

CLIENT:
City of Thornton
9500 Civic Center Drive
Thornton, CO 80229

THORNTON GROUNDWATER RECHARGE PROJECT TRIAL SITE

CELL 2
GRADING PLAN

SMRC PROJECT NO.	ERC-21-51
DESIGN BY:	DAB
DRAWN BY:	RH
CHECKED BY:	DAB
DRAWING NO.	C-3
SHEET:	12 OF 35

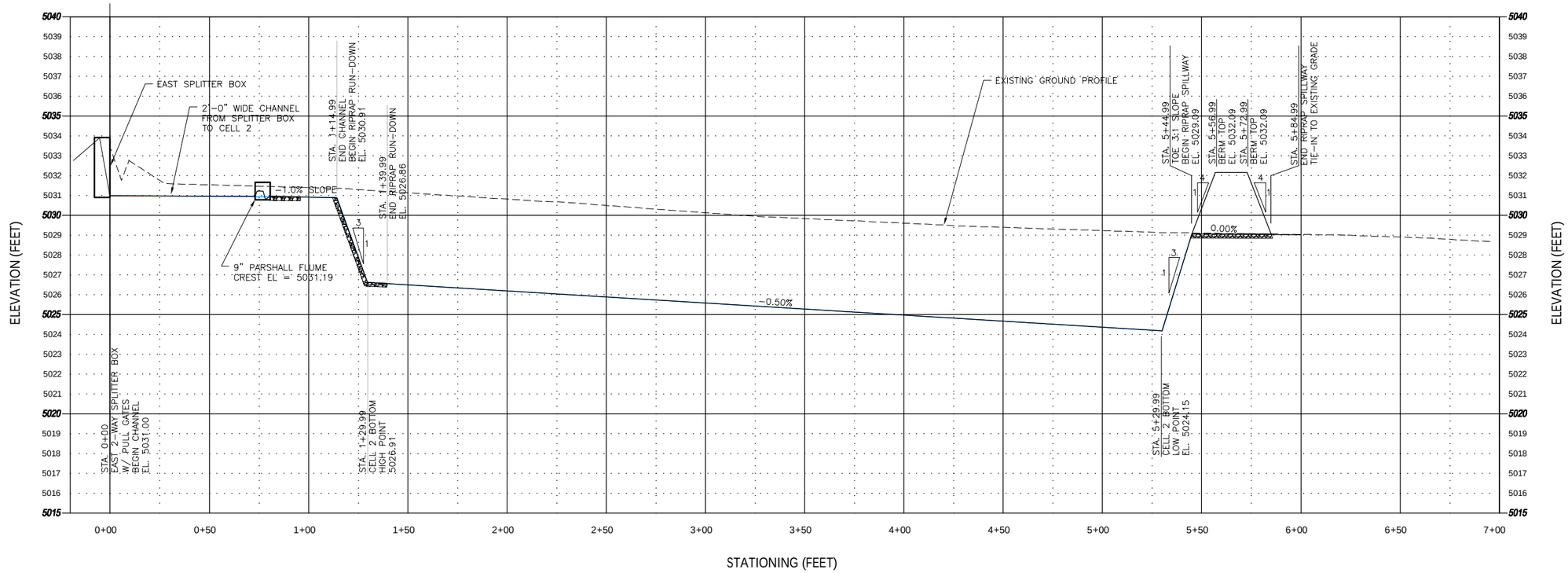

LOCATION	STATION	PR INVERT ELEVATION
FLUME RAMP	0+73.00	5030.94
FLUME CREST	0+76.83	5031.19
FLUME EXIT	0+80.33	5030.94

CROSS SECTION – STATION ALONG CELL 2 CENTERLINE
(STA 0+00 TO STA 6+00)
VERT SCALE: 1"=3'
HORIZ SCALE: 1"=30'

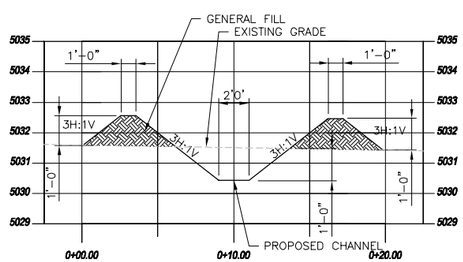

CROSS SECTION B – ALONG 2'-0" CHANNEL AT CELL 2

VERT SCALE: 1"=2.5'
HORIZ SCALE: 1"=5'

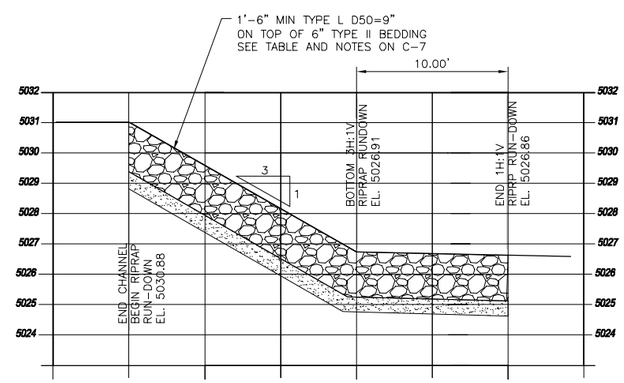

CROSS SECTION C – ALONG CELL 2 RIPRAP RUNDOWN

VERT SCALE: 1"=2.5'
HORIZ SCALE: 1"=5'

NOTE:

SEE PROFILE A THIS SHEET STATIONING AND ADDITIONAL INFORMATION

REV	DATE	DESCRIPTION	APPRVD BY
	9/14/22	ISSUED FOR BID – NOT FOR CONSTRUCTION	JLB

REVISIONS

0 1/2 1 2
2" AT FULL SIZE
SCALE ACCORDINGLY

CONSULTANTS:

ERC
225 Union Blvd, STE 325
Lakewood, CO 80228
PH: 303.679.4820

SMRC Structural Engineers Inc.
215 S. Wadsworth Blvd., Suite 320
Lakewood, CO 80226
303.274.8656
f 303.484.3777

CLIENT:

City of Thornton
9500 Civic Center Drive
Thornton, CO 80229

THORNTON GROUNDWATER RECHARGE PROJECT TRIAL SITE

CELL 2 PROFILES
FILL CHANNEL, CELL AND SPILLWAY

SMRC PROJECT NO. ERC-21-51
DESIGN BY: DAB
DRAWN BY: RH
CHECKED BY: DAB
DRAWING NO. C-4
SHEET 13 OF 35

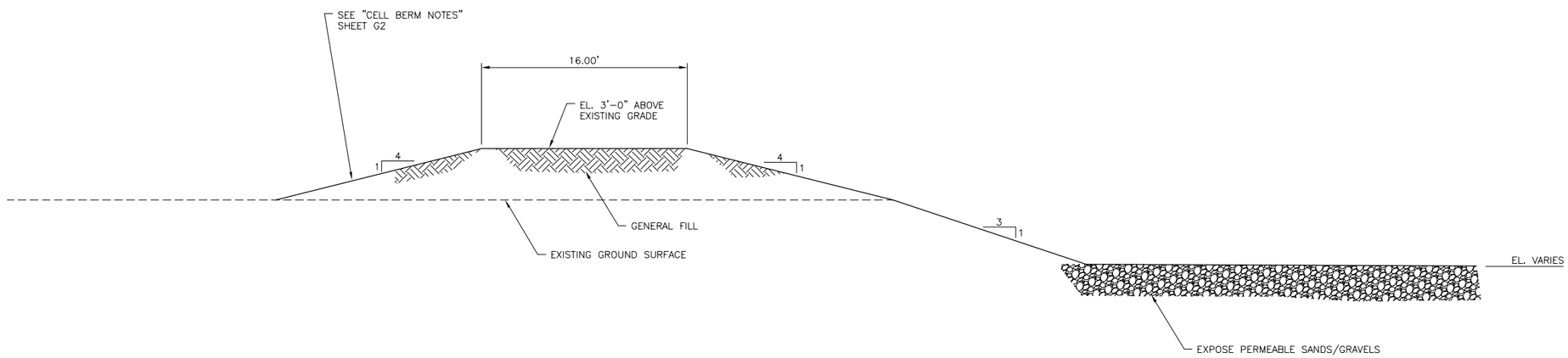

TYPICAL CELL EMBANKMENT SECTION
SCALE: 1"=5'

REVISIONS			
	9/14/22	ISSUED FOR BID – NOT FOR CONSTRUCTION	JLB
REV	DATE	DESCRIPTION	APPRVD BY

0 1/2 1 2
2" AT FULL SIZE
SCALE ACCORDINGLY

CONSULTANTS:

ERC
225 Union Blvd, STE 325
Lakewood, CO 80228
PH: 303.679.4820

SMRC Structural Engineers Inc.
215 S. Wadsworth Blvd.,
Suite 320
Lakewood, CO 80226
303.274.8656
f 303.484.3777

CLIENT:

City of Thornton
9500 Civic Center Drive
Thornton, CO 80229

THORNTON GROUNDWATER RECHARGE PROJECT TRIAL SITE

TYPICAL CELL SECTION

SMRC PROJECT NO. ERC-21-51
DESIGN BY: DAB
DRAWN BY: RH
CHECKED BY: DAB

DRAWING NO. C-5

SHEET: 14 OF 35

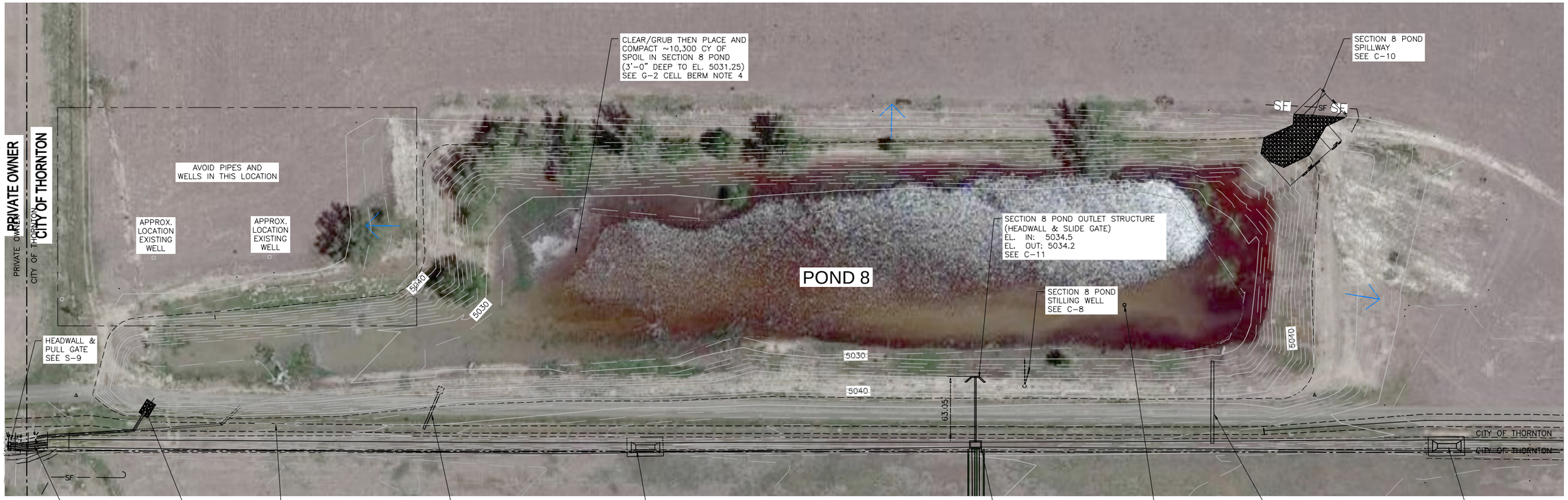

SECTION 8 POND GRADING PLAN

SCALE: 1" = 50'

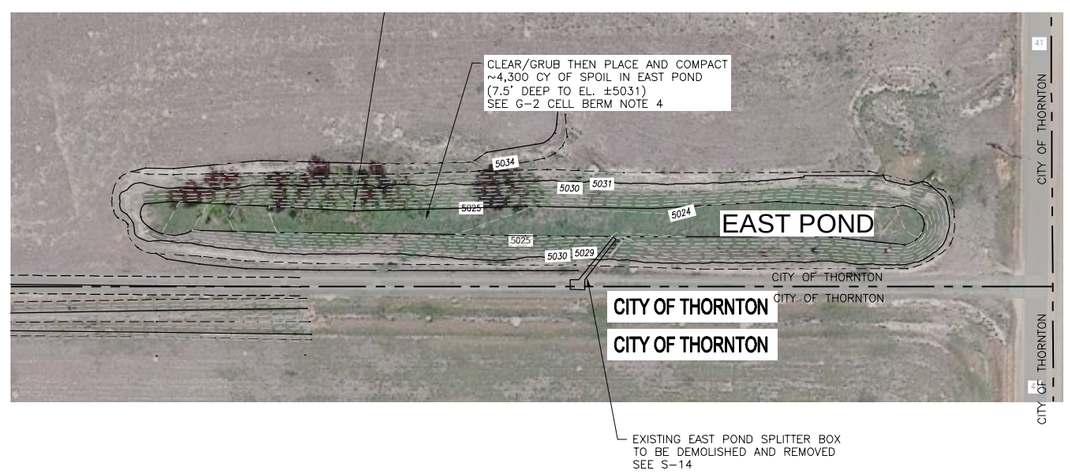

EAST POND GRADING PLAN

SCALE: 1" = 50'

NOTE:

1. IF EARTHWORK CUT-TO-FILL DOES NOT BALANCE, ADJUST FILL IN EAST POND PER ENGINEER'S DIRECTION.

REVISIONS			
	9/14/22	ISSUED FOR BID – NOT FOR CONSTRUCTION	JLB
REV	DATE	DESCRIPTION	APPRVD BY

0 1/2 1 2
2" AT FULL SIZE
SCALE ACCORDINGLY

CONSULTANTS:

ERC
225 Union Blvd, STE 325
Lakewood, CO 80228
PH: 303.679.4820

SMRC Structural Engineers Inc.
215 S. Wadsworth Blvd., Suite 320
Lakewood, CO 80226
303.274.8656
f 303.484.3777

CLIENT:

City of Thornton
9500 Civic Center Drive
Thornton, CO 80229

THORNTON GROUNDWATER RECHARGE PROJECT TRIAL SITE

SECTION 8 POND AND EAST POND GRADING PLANS

SMRC PROJECT NO. ERC-21-51
DESIGN BY: DAB
DRAWN BY: RH
CHECKED BY: DAB
DRAWING NO. C-6
SHEET: 15 OF 35

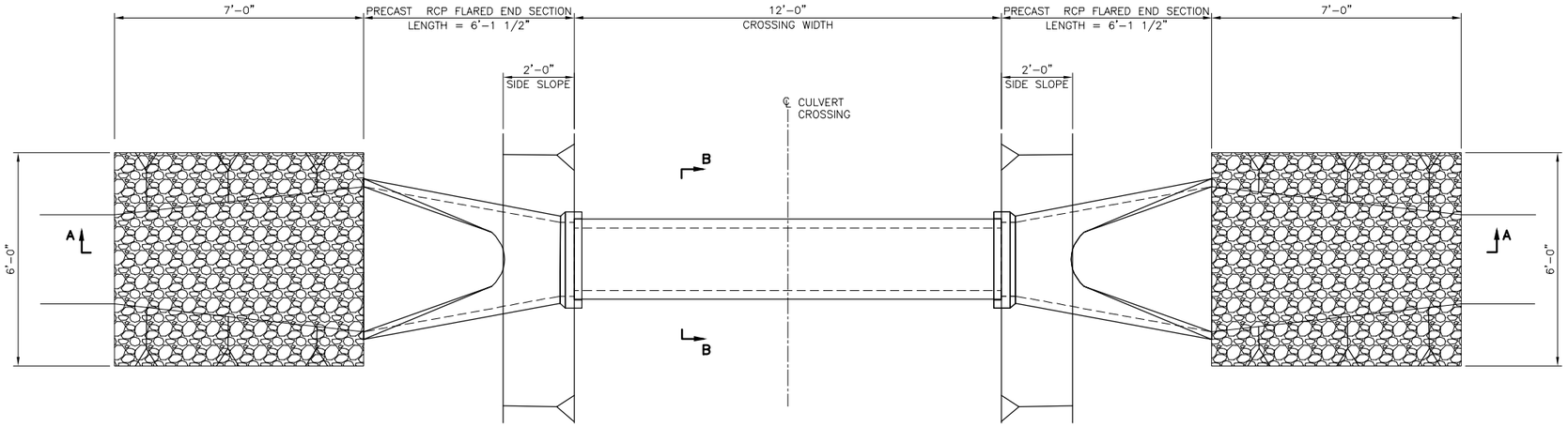

CULVERT CROSSING PLAN
SCALE: 1/2"=1'-0"

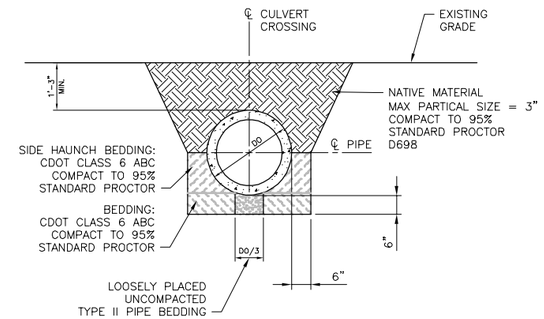

SECTION B–B
SCALE: 1/2"=1'-0"

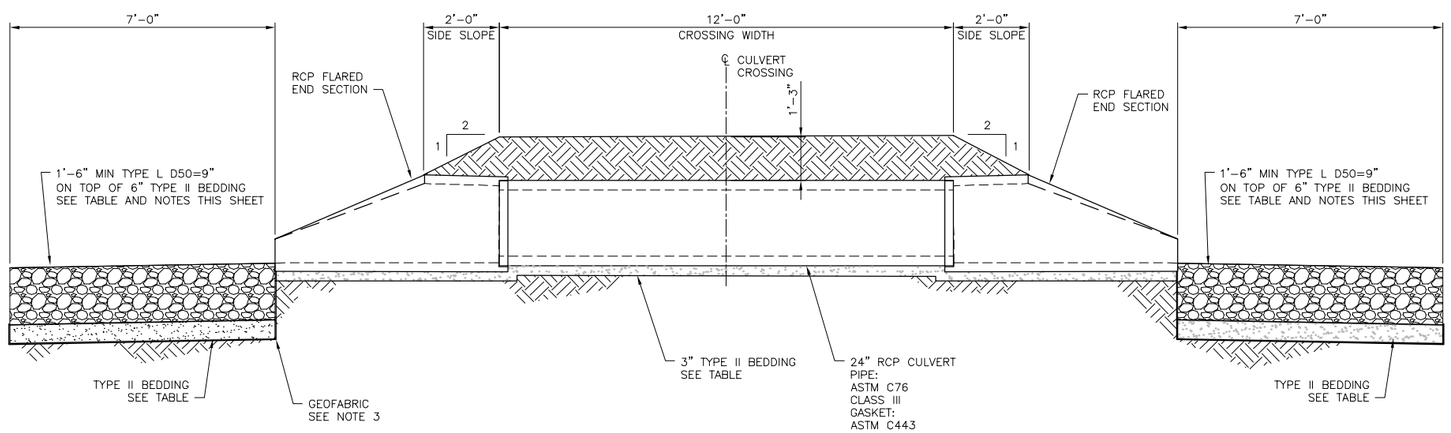

SECTION A–A
SCALE: 1/2"=1'-0"

TYPE L RIPRAP GRADATION (D50 = 9 INCHES)	
STONE SIZE	PERCENT OF MATERIAL SMALLER THAN STONE SIZE
15	70 – 100
12	50 – 70
9	35 – 50
3	2 – 10

TYPE II BEDDING GRADATION	
US STANDARD SIEVE SIZE	PERCENT BY WEIGHT PASSING
3"	90 – 100
3/4"	20 – 90
No. 4	0 – 20
No. 200	0 – 3

NOTES:

1. SCALE AS NOTED
2. GEOFABRIC SHALL BE MIRAFI 140N SERIES NON WOVEN POLYPROPYLENE. WRAP BEDDING TOP, BOTTOM, AND SIDES IN GEOFABRIC.

REVISIONS			
REV	DATE	DESCRIPTION	APPRVD BY
	9/14/22	ISSUED FOR BID – NOT FOR CONSTRUCTION	JLB

0 1/2 1 2
2" AT FULL SIZE
SCALE ACCORDINGLY

CONSULTANTS:

ERC
225 Union Blvd, STE 325
Lakewood, CO 80228
PH: 303.679.4820

SMRC Structural Engineers Inc.
215 S. Wadsworth Blvd.,
Suite 320
Lakewood, CO 80226
303.274.8656
f 303.484.3777

CLIENT:

City of Thornton
9500 Civic Center Drive
Thornton, CO 80229

THORNTON GROUNDWATER RECHARGE PROJECT TRIAL SITE

24" RCP CULVERT CROSSING
PLAN AND SECTIONS

SMRC PROJECT NO.: ERC–21–51
DESIGN BY: DAB
DRAWN BY: RH
CHECKED BY: DAB
DRAWING NO.: C–7
SHEET: 16 OF 35

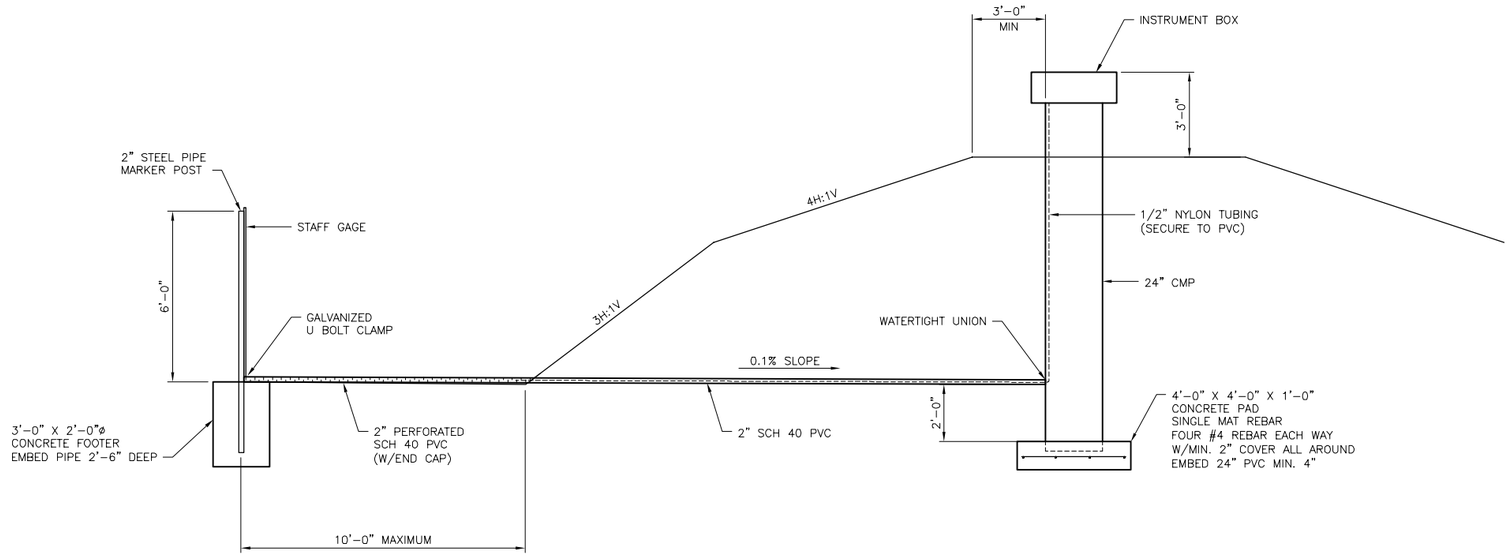

TYPICAL RECHARGE CELL STILLING WELL
SCALE: 3/8"=1'-0"

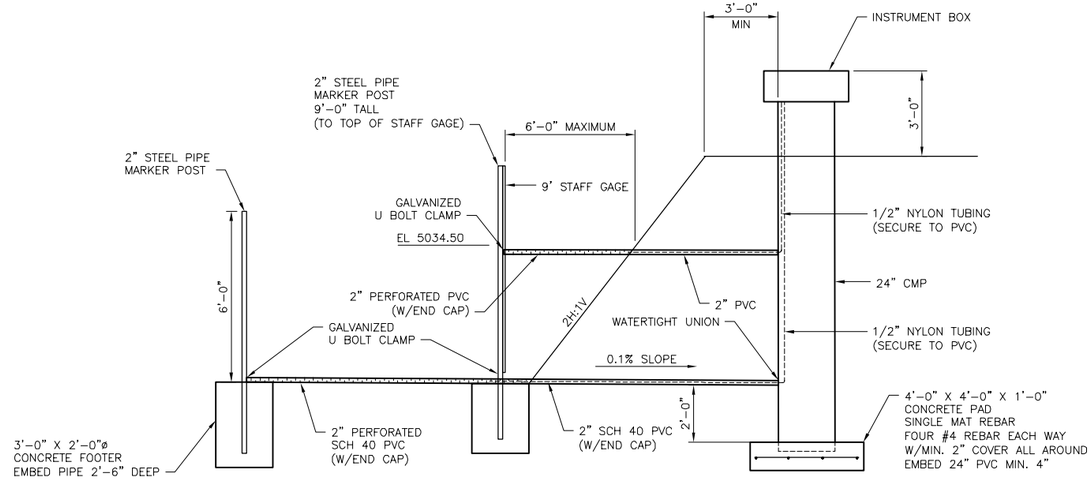

SECTION 8 POND STILLING WELL
SCALE: 3/8"=1'-0"

REVISIONS			
	9/14/22	ISSUED FOR BID – NOT FOR CONSTRUCTION	JLB
REV	DATE	DESCRIPTION	APPRVD BY

0 1/2 1 2
2" AT FULL SIZE
SCALE ACCORDINGLY

CONSULTANTS:

ERC
225 Union Blvd, STE 325
Lakewood, CO 80228
PH: 303.679.4820

SMRC Structural Engineers Inc.
215 S. Wadsworth Blvd.,
Suite 320
Lakewood, CO 80226
303.274.8656
f 303.484.3777

CLIENT:

City of Thornton
9500 Civic Center Drive
Thornton, CO 80229

THORNTON GROUNDWATER RECHARGE PROJECT TRIAL SITE

TYPICAL RECHARGE CELL STILLING WELL
SECTION 8 POND STILLING WELL

SMRC PROJECT NO. ERC-21-51
DESIGN BY: DAB
DRAWN BY: RH
CHECKED BY: DAB

DRAWING NO. C-8

SHEET: 17 OF 35

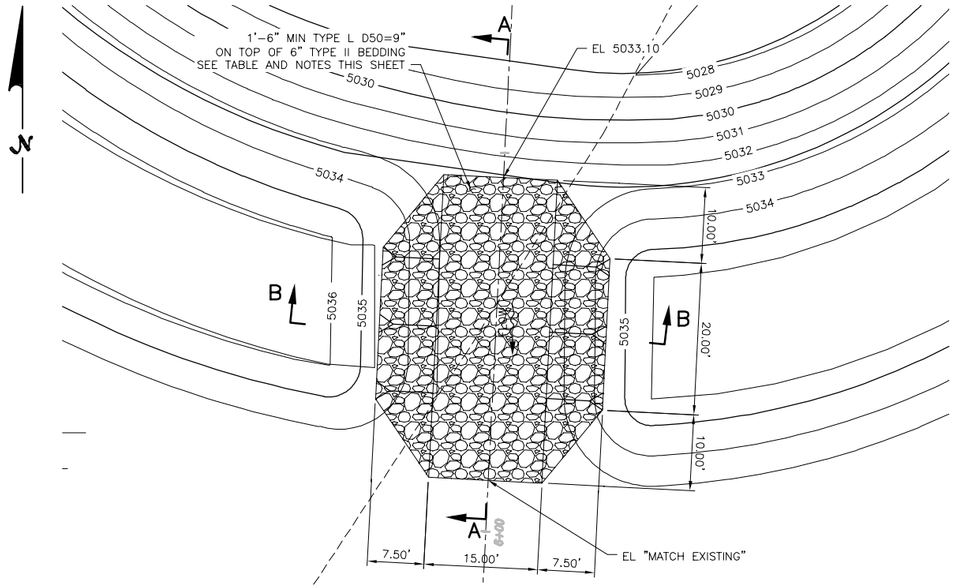

CELL 1 SPILLWAY PLAN
SCALE: 1"=10'-0"

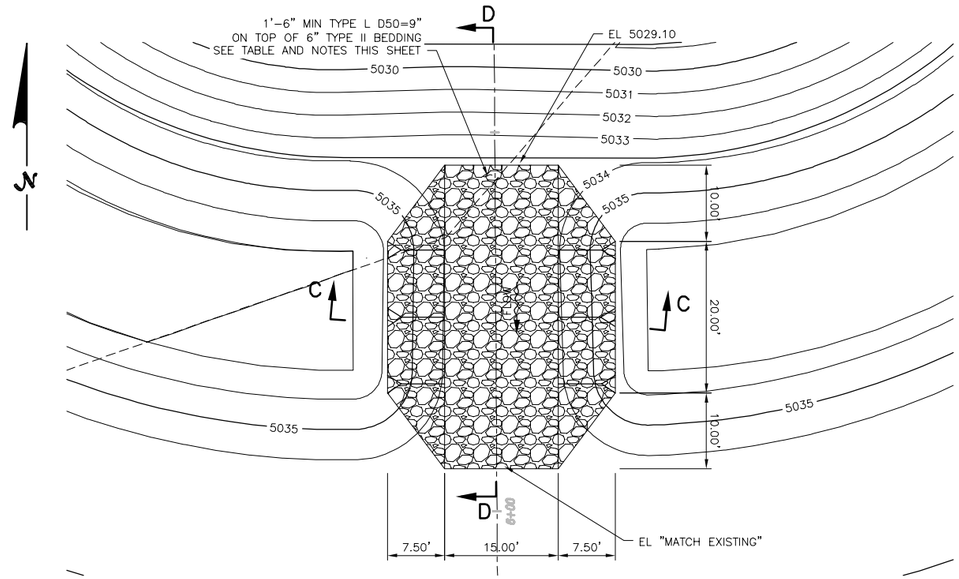

CELL 2 SPILLWAY PLAN
SCALE: 1"=10'-0"

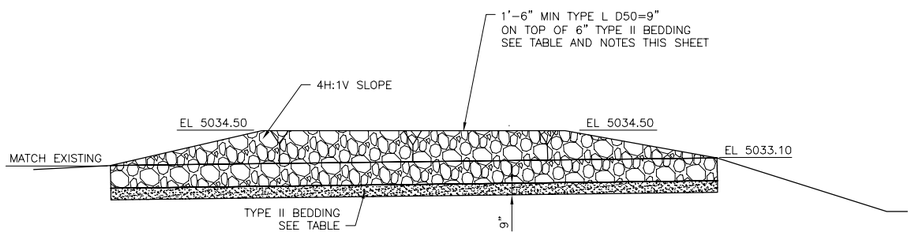

SPILLWAY SECTION A
SCALE: 1"=5'-0"

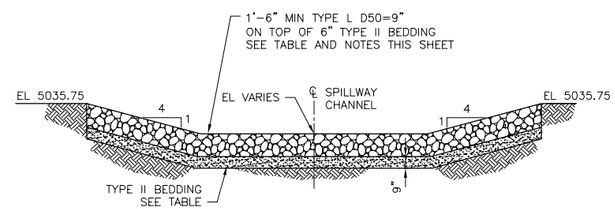

SPILLWAY SECTION C
SCALE: 1"=5'-0"

TYPE L RIPRAP GRADATION (D50 = 9 INCHES)	
STONE SIZE	PERCENT OF MATERIAL SMALLER THAN STONE SIZE
15	70 – 100
12	50 – 70
9	35 – 50
3	2 – 10

TYPE II BEDDING GRADATION	
US STANDARD SIEVE SIZE	PERCENT BY WEIGHT PASSING
3"	90 – 100
3/4"	20 – 90
No. 4	0 – 20
No. 200	0 – 3

NOTES:

1. SCALE AS NOTED
2. GEOFABRIC SHALL BE MIRAFI 140N SERIES NON WOVEN POLYPROPYLENE. WRAP BEDDING TOP, BOTTOM, AND SIDES IN GEOFABRIC.

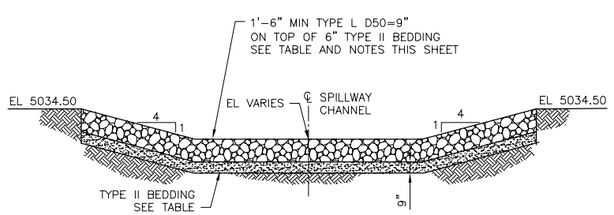

SPILLWAY SECTION B
SCALE: 1"=5'-0"

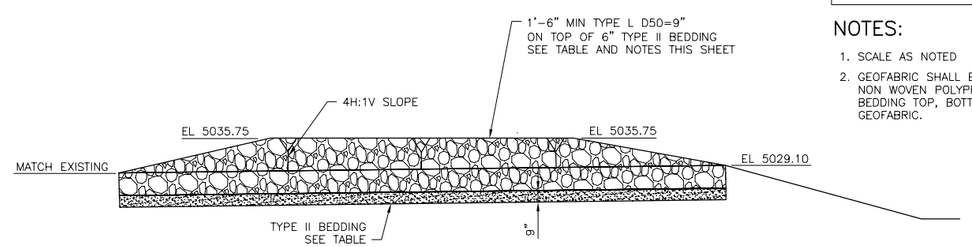

SPILLWAY SECTION D
SCALE: 1"=5'-0"

REVISIONS			
REV	DATE	DESCRIPTION	APPRVD BY
	9/14/22	ISSUED FOR BID – NOT FOR CONSTRUCTION	JLB

0 1/2 1 2
2" AT FULL SIZE
SCALE ACCORDINGLY

CONSULTANTS:
ERC
225 Union Blvd, STE 325
Lakewood, CO 80228
PH: 303.679.4820

SMRC Structural Engineers Inc.
215 S. Wadsworth Blvd., Suite 320
Lakewood, CO 80226
303.274.8656
f 303.484.3777

CLIENT:
City of Thornton
9500 Civic Center Drive
Thornton, CO 80229

THORNTON GROUNDWATER RECHARGE PROJECT TRIAL SITE

TYPICAL RECHARGE CELL SPILLWAY
PLAN AND SECTIONS

SMRC PROJECT NO. ERC-21-51
DESIGN BY: DAB
DRAWN BY: RH
CHECKED BY: DAB
DRAWING NO. C-9
SHEET: 18 OF 35

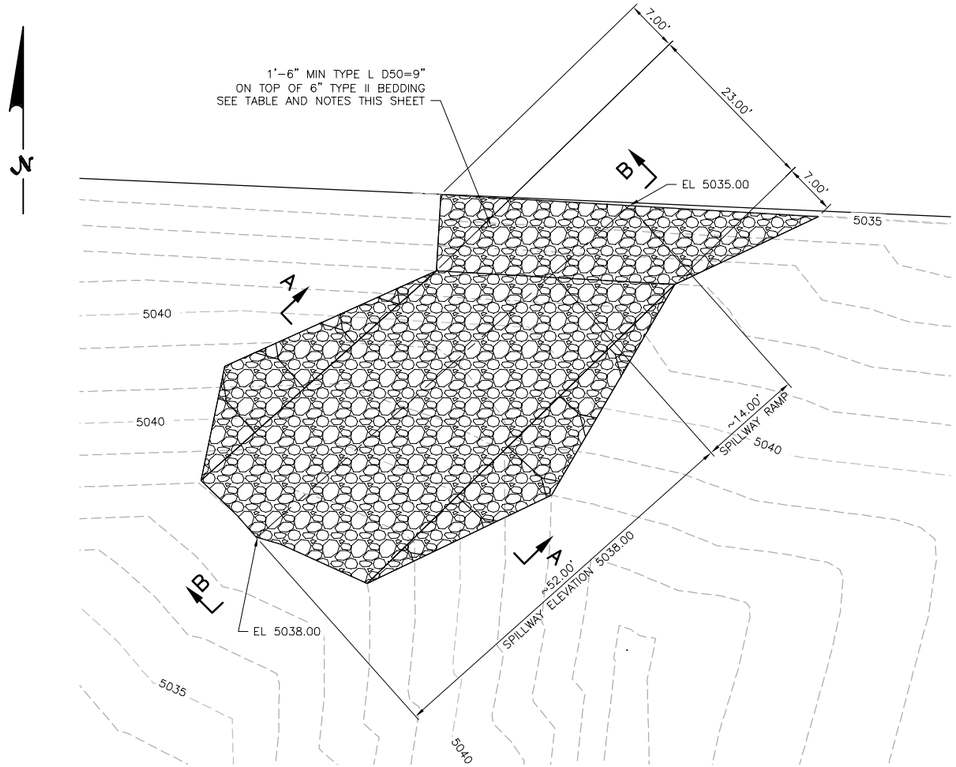

SECTION 8 POND SPILLWAY PLAN
SCALE: 1" = 10'

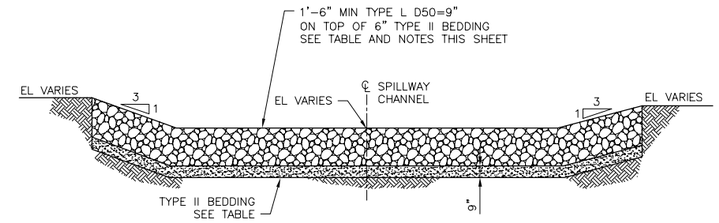

SECTION A–A
SCALE: 1"=5'

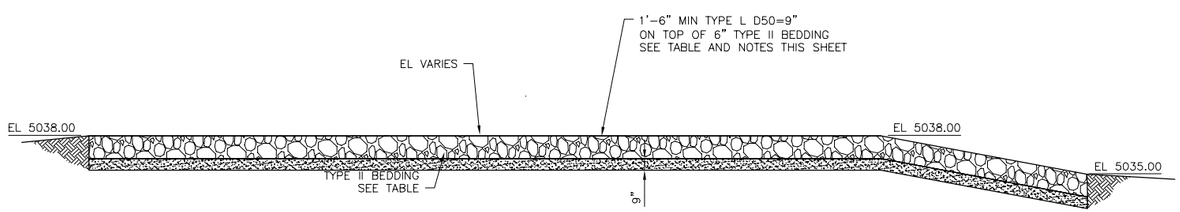

SECTION B–B
SCALE: 1"=5'

TYPE L RIPRAP GRADATION (D50 = 9 INCHES)	
STONE SIZE	PERCENT OF MATERIAL SMALLER THAN STONE SIZE
15	70 – 100
12	50 – 70
9	35 – 50
3	2 – 10

TYPE II BEDDING GRADATION	
US STANDARD SIEVE SIZE	PERCENT BY WEIGHT PASSING
3"	90 – 100
3/4"	20 – 90
No. 4	0 – 20
No. 200	0 – 3

NOTES:

1. SCALE AS NOTED
2. GEOFABRIC SHALL BE MIRAFI 140N SERIES NON WOVEN POLYPROPYLENE. WRAP BEDDING TOP, BOTTOM, AND SIDES IN GEOFABRIC.

REVISIONS			
REV	DATE	DESCRIPTION	APPRVD BY
	9/14/22	ISSUED FOR BID – NOT FOR CONSTRUCTION	JLB

0 1/2 1 2
2" AT FULL SIZE
SCALE ACCORDINGLY

CONSULTANTS:
ERC
225 Union Blvd, STE 325
Lakewood, CO 80228
PH: 303.679.4820

SMRC Structural Engineers Inc.
215 S. Wadsworth Blvd., Suite 320
Lakewood, CO 80226
303.274.8656
f 303.484.3777

CLIENT:
City of Thornton
9500 Civic Center Drive
Thornton, CO 80229

THORNTON GROUNDWATER RECHARGE PROJECT TRIAL SITE

SECTION 8 POND SPILLWAY
PLAN AND SECTIONS

SMRC PROJECT NO. ERC–21–51
DESIGN BY: DAB
DRAWN BY: RH
CHECKED BY: DAB
DRAWING NO. C–10
SHEET: 19 OF 35

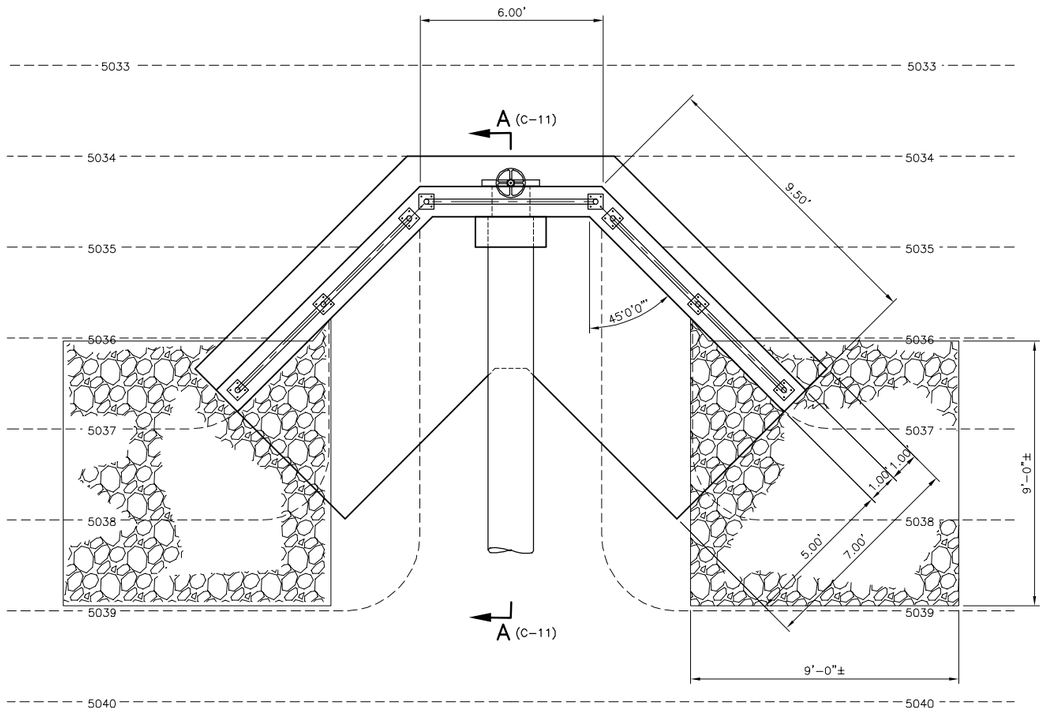

SECTION 8 POND OUTLET STRUCTURE CIVIL PLAN
SCALE: 1"=30'

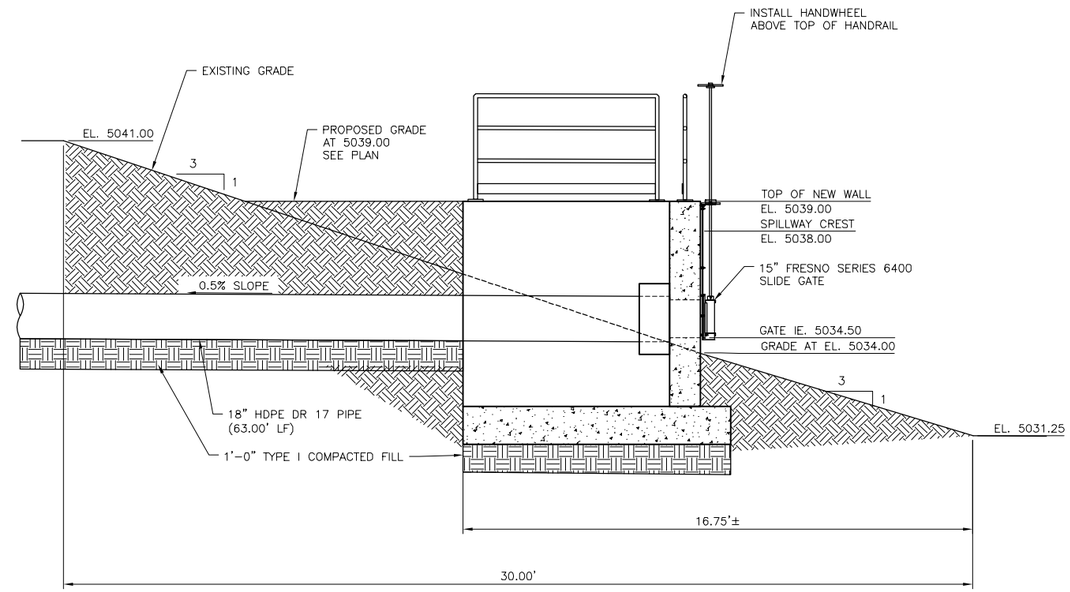

SECTION A–A
SCALE: 1"=30'

NOTE:

SEE SHEETS S6 & S7 FOR STRUCTURAL AND CONCRETE REINFORCEMENT PLANS AND SECTIONS.

REVISIONS			
	9/14/22	ISSUED FOR BID – NOT FOR CONSTRUCTION	JLB
REV	DATE	DESCRIPTION	APPRVD BY

0 1/2 1 2
2" AT FULL SIZE
SCALE ACCORDINGLY

CONSULTANTS:

ERC
225 Union Blvd, STE 325
Lakewood, CO 80228
PH: 303.679.4820

SMRC Structural Engineers Inc.
215 S. Wadsworth Blvd.,
Suite 320
Lakewood, CO 80226
303.274.8656
f 303.484.3777

CLIENT:

City of Thornton
9500 Civic Center Drive
Thornton, CO 80229

THORNTON GROUNDWATER RECHARGE PROJECT TRIAL SITE

SECTION 8 POND OUTLET STRUCTURE
CIVIL PLAN AND SECTION

SMRC PROJECT NO. ERC–21–51
DESIGN BY: DAB
DRAWN BY: RH
CHECKED BY: DAB

DRAWING NO. C–11

SHEET 20 OF 35

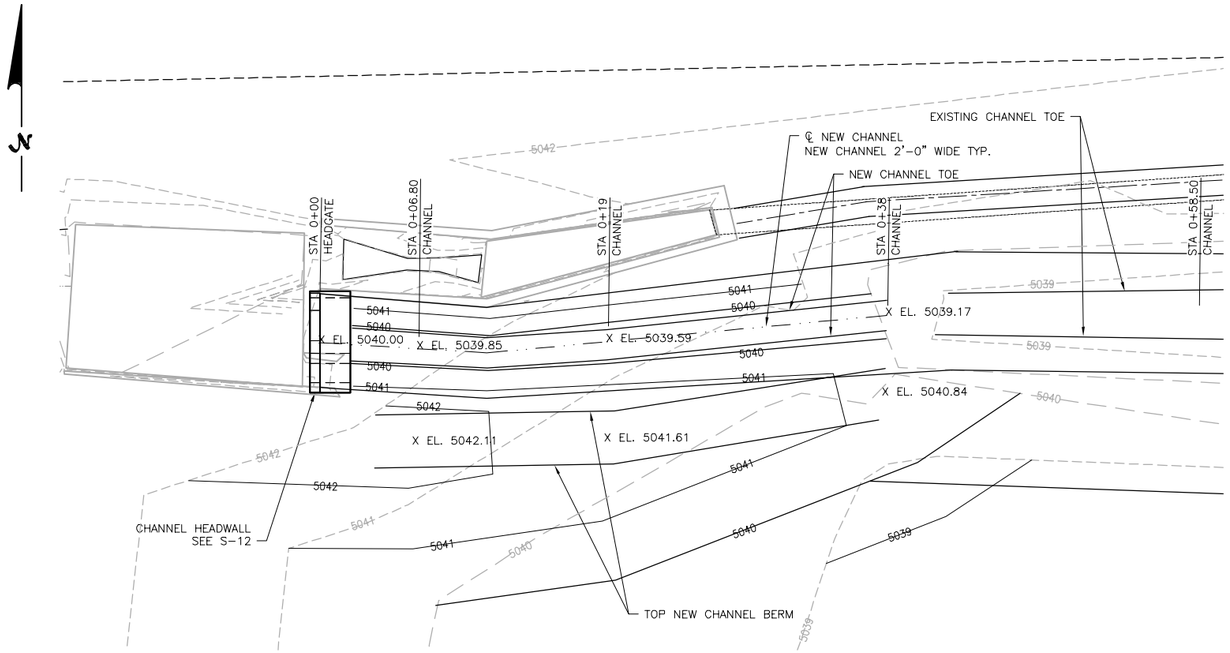

NEW CHANNEL PLAN
SCALE: 1"=5'

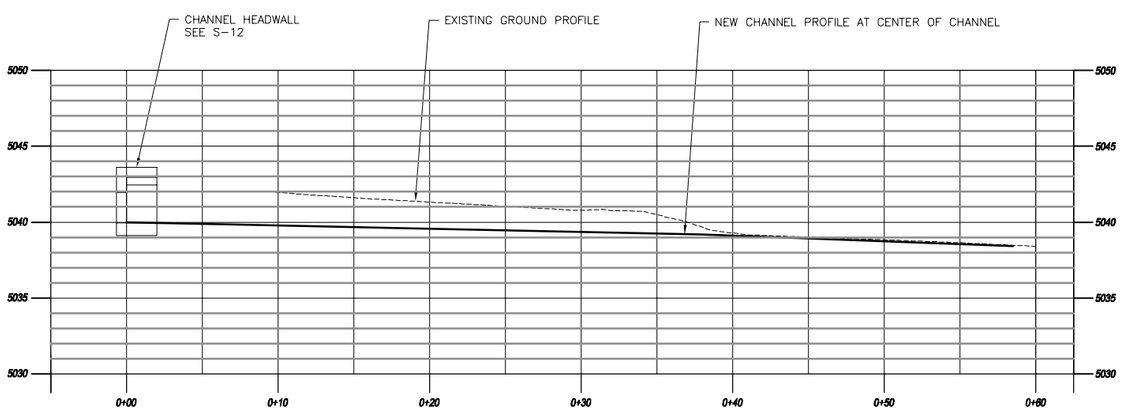

NEW CHANNEL PROFILE
SCALE: 1"=5'

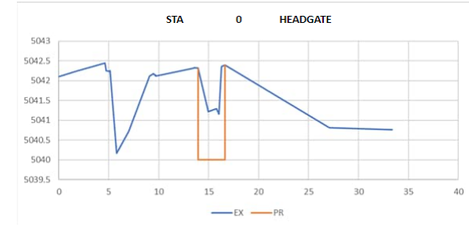

CHANNEL SECTION AT STA 0+00
SCALE: N.T.S

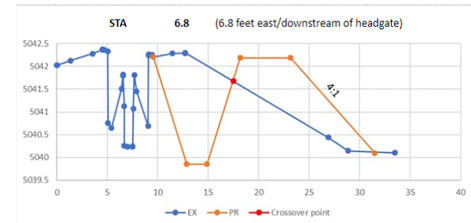

CHANNEL SECTION AT STA 0+06.80
SCALE: N.T.S

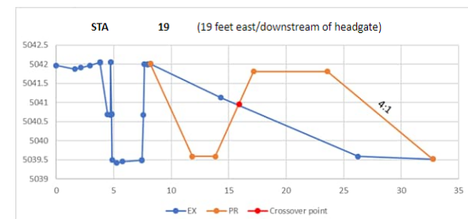

CHANNEL SECTION AT STA 0+19
SCALE: N.T.S

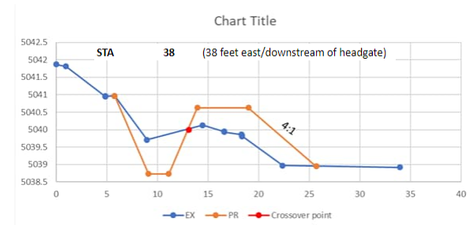

CHANNEL SECTION AT STA 0+38
SCALE: N.T.S

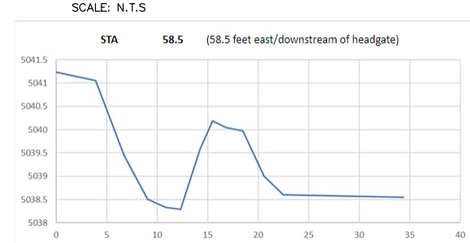

CHANNEL SECTION AT STA 0+58.50
SCALE: N.T.S

NOTE:
CHANNEL CROSS SECTION ABOVE PROVIDE BY ERC.

REVISIONS			
REV	DATE	DESCRIPTION	APPRVD BY
	9/14/22	ISSUED FOR BID – NOT FOR CONSTRUCTION	JLB

0 1/2 1 2
2" AT FULL SIZE
SCALE ACCORDINGLY

CONSULTANTS:
ERC
225 Union Blvd, STE 325
Lakewood, CO 80228
PH: 303.679.4820

SMRC Structural Engineers Inc.
215 S. Wadsworth Blvd.,
Suite 320
Lakewood, CO 80226
303.274.8656
f 303.484.3777

CLIENT:
City of Thornton
9500 Civic Center Drive
Thornton, CO 80229

THORNTON GROUNDWATER RECHARGE PROJECT TRIAL SITE

NEW CHANNEL EXCAVATION
CIVIL PLAN AND PROFILE

SMRC PROJECT NO. ERC-21-51
DESIGN BY: DAB
DRAWN BY: RH
CHECKED BY: DAB

DRAWING NO. C-12

SHEET: 21 OF 35

CONCRETE NOTES

1. ALL CONCRETE IS DESIGNED IN ACCORDANCE WITH AMERICAN CONCRETE INSTITUTE, ACI 350-06 AND SHALL BE CONSTRUCTED IN ACCORDANCE WITH PROJECT SPECIFICATIONS.
2. CONCRETE SHALL HAVE A MINIMUM 28 DAY COMPRESSIVE STRENGTH OF 4500 PSI UNLESS NOTED OTHERWISE.
3. CONCRETE WORK SHALL CONFORM TO ACI 301.
4. REINFORCEMENT STEEL SHALL BE DEFORMED BARS CONFORMING IN QUALITY TO THE REQUIREMENTS OF ASTM A-615, "SPECIFICATIONS FOR DEFORMED BILLET-STEEL BARS FOR CONCRETE REINFORCEMENT" GRADE 60. REINFORCING TO BE WELDED SHALL CONFORM TO ASTM A706.
5. ALL DETAILING, FABRICATION AND PLACING OF REINFORCING BARS, UNLESS OTHERWISE INDICATED, SHALL BE IN ACCORDANCE WITH ACI-315, "MANUAL OF CONCRETE PRACTICE FOR DETAILS AND DETAILING CONCRETE REINFORCEMENT", LATEST EDITION.
6. CONSTRUCTION TOLERANCES SHALL BE IN ACCORDANCE WITH ACI 117.
7. METAL CLIPS OR SUPPORTS SHALL NOT BE PLACED IN CONTACT WITH THE FORMS OR THE SUBGRADE. CONCRETE BLOCKS (OR DOBIES) SUPPORTING BARS ON SUBGRADE SHALL BE IN SUFFICIENT NUMBERS TO SUPPORT THE BARS WITHOUT SETTLEMENT, BUT IN NO CASE SHALL SUCH SUPPORT BE CONTINUOUS.
8. REINFORCING BARS AND ACCESSORIES SHALL NOT BE IN CONTACT WITH PIPE, PIPE FLANGE OR METAL PARTS EMBEDDED IN CONCRETE, A MINIMUM OF 2 INCHES CLEARANCE SHALL BE PROVIDED AT ALL TIMES.
9. REINFORCING STEEL SHALL HAVE THE FOLLOWING MINIMUM CLEAR CONCRETE COVER, UNLESS OTHERWISE SHOWN ON THE DRAWINGS:

   A) CONCRETE CAST AGAINST EARTH, (I.E. BOTTOM OF SLABS, FOOTINGS, ETC) – 3 INCHES.
   B) FORMED CONCRETE SURFACES EXPOSED TO SOIL, WATER AND/OR WEATHER INCLUDING BOTTOM OF SLABS OVER LIQUID-CONTAINING STRUCTURES – 2 INCHES.

10. UNLESS OTHERWISE NOTED, WALLS AND SLABS SHOWN WITH A SINGLE LAYER OF REINFORCEMENT SHALL HAVE THAT REINFORCEMENT CENTERED.
11. PLACING OF CONCRETE SHALL CONFORM TO ACI 304R. HOT WEATHER CONCRETE SHALL BE PLACED PER ACI 305R. COLD WEATHER CONCRETE SHALL BE PLACED PER ACI 306R.
12. ALL DIMENSIONS TO A JOINT ARE TO THE CENTERLINE OF THE JOINT.
13. DIMENSIONS NOT SHOWN ARE THE SAME AS DIMENSIONS FOR IDENTICAL DETAILS SHOWN ELSEWHERE.
14. BEFORE PLACING CONCRETE ON GRADE, CARE SHALL BE TAKEN THAT ALL BURIED MATERIAL BELOW GRADE IS IN PLACE.
15. PIPE SLEEVES AND EMBEDDED PIPING 12" IN DIAMETER AND LARGER ARE ALWAYS SHOWN ON THE CONCRETE OUTLINE DRAWINGS. SMALLER DIAMETER PIPE SLEEVES OR PIPING MAY OR MAY NOT BE SHOWN ON THE CONCRETE OUTLINE DRAWINGS.
16. CHAMFER EDGES OF PERMANENTLY EXPOSED CONCRETE SURFACES WITH A 45 DEGREE BEVEL, 3/4"X3/4".
17. DRAWINGS ARE NOT TO BE SCALED FOR ESTIMATING OR ANY OTHER PURPOSE.
18. ALL REINFORCEMENT STEEL BENDS AND LAPS, UNLESS OTHERWISE NOTED, SHALL SATISFY THE FOLLOWING MINIMUM REQUIREMENT:

DETAIL OF REINFORCEMENT – LAP LENGTHS

BAR SIZE		#4	#5	#6	#7	#8	#9	#10	#11
CONCRETE DESIGN STRENGTH		4500 PSI							
GR 60	TOP BAR *	2'-6"	3'-2"	3'-9"	5'-6"	6'-4"	7'-1"	8'-0"	8'-11"
	OTHER BAR	1'-11"	2'-5"	2'-11"	4'-3"	4'-10"	5'-6"	6'-2"	6'-10"

* TOP BARS SHALL BE DEFINED AS ANY HORIZONTAL BARS PLACED SUCH THAT MORE THAN 12" FRESH CONCRETE IS CAST IN THE MEMBER BELOW THE BAR, IN ANY SINGLE PLACEMENT. HORIZONTAL WALL BARS ARE CONSIDERED TOP BARS.

19. WHEN SPLICING BARS OF DIFFERENT SIZE, THE LENGTH OF LAP SHALL BE GOVERNED BY THE LARGER DIAMETER BAR.
20. NON-CONTACT LAP SPLICES SHALL NOT BE SPACED FARTHER APART THAN ONE-FIFTH THE REQUIRED LENGTH OF LAP OR 6 INCHES.
21. SPLICES ARE TO BE MADE SO THAT THE GIVEN DISTANCES TO FACE OF CONCRETE WILL BE MAINTAINED.
22. DIMENSIONS ARE TO THE CENTERLINES OF THE BARS UNLESS SHOWN OTHERWISE.
23. REINFORCEMENT PARALLELING CONSTRUCTION JOINTS SHALL HAVE A MINIMUM OF 2" CLEAR COVER.
24. REINFORCEMENT AT SMALL OPENINGS (MAX 1'-6") IN WALLS AND SLABS MAY BE SPREAD APART NOT MORE THAN 1 1/2 TIMES THE BAR SPACING.
25. REINFORCEMENT MAY BE ADJUSTED LATERALLY TO MAINTAIN A CLEAR DISTANCE OF AT LEAST 1" BETWEEN THE REINFORCEMENT AND WATERSTOPS, ANCHOR BOLTS, FORM TIES, CONDUITS, AND OTHER EMBEDDED MATERIAL. IN HEAVILY REINFORCED AREAS RELOCATION OF THE EMBEDDED MATERIAL MUST BE CONSIDERED.
26. IN NO CASE SHALL BARS BE FIELD BENT TO GREATER THAN 6 TO 1 SLOPE.
27. BARS SHOWN WITH BENDS NOT DIMENSIONED SHALL BE ASSUMED TO END WITH A STANDARD HOOK AS DEFINED IN THE ACI-318-08. HOOK LAPS AND DEVELOPMENT LENGTHS SHALL CONFORM TO THE REQUIREMENTS OF ACI-318-08.

CONCRETE NOTES (CONT)

28. UNLESS OTHERWISE SHOWN, THE MINIMUM LENGTH OF LAP FOR SPLICING PARALLEL BARS SHALL BE AS REQUIRED FOR A CLASS "B" TENSION SPLICE LENGTH, IN ACCORDANCE WITH ACI 350-06.
29. THE SYMBOL DESIGNATES THE BAR CALLOUTS ARE THE SAME SIZE AND SPACING.
30. REINFORCEMENT PARALLEL TO ANCHOR BOLTS OR OTHER EMBEDDED MATERIAL SHALL BE PLACED TO MAINTAIN A CLEAR DISTANCE OF AT LEAST 1-1/3 TIMES THE MAXIMUM SIZE AGGREGATE.
31. THE FIRST AND LAST BARS IN WALLS AND SLABS, STIRRUPS IN BEAMS, AND TIES IN COLUMNS ARE TO START AND END AT A MAXIMUM OF ONE HALF OF THE ADJACENT BAR SPACING.
32. BARS SHOWN THUS #8@12, INDICATE A GROUP OF THE SAME SIZE BARS EQUALLY SPACED.
33. DOWELS INDICATED ON THE DRAWINGS, SUCH AS #6 (DWL), SHALL HAVE AN EMBEDMENT EQUAL TO THE DEVELOPMENT LENGTH FOR TENSION REQUIRED BY ACI 318-02, AND A PROJECTION EQUAL TO THAT REQUIRED FOR LAP SPLICING A BAR OF THE SAME DIAMETER.
34. PLAIN DOWELS INDICATED ON THE DRAWINGS, SUCH AS #6 (DWL), ACROSS CONTRACTION JOINTS SHALL BE SMOOTH BARS UNIFORMLY COATED WITH A FILM OF OIL BEFORE CONCRETE PLACEMENT. VISCOSITY OF THE OIL SHALL HAVE AN SAE RATING OF NOT LESS THAN 250.
35. SPLICES SHALL BE STAGGERED TO GIVE 12 INCHES CLEAR BETWEEN ENDS OF ADJACENT SPLICES, IF BARS ARE SPACED CLOSER THAN 6 INCHES OR 6 BAR DIAMETERS.

REVISIONS

REV	DATE	DESCRIPTION	APPRVD BY
	9/14/22	ISSUED FOR BID – NOT FOR CONSTRUCTION	JLB

0 1/2 1 2
2" AT FULL SIZE
SCALE ACCORDINGLY

CONSULTANTS:
ERC
225 Union Blvd, STE 325
Lakewood, CO 80228
PH: 303.679.4820

SMRC Structural Engineers Inc.
215 S. Wadsworth Blvd.,
Suite 320
Lakewood, CO 80226
303.274.8656
f 303.484.3777

CLIENT:
City of Thornton
9500 Civic Center Drive
Thornton, CO 80229

THORNTON GROUNDWATER RECHARGE PROJECT TRIAL SITE

STRUCTURAL NOTES

SMRC PROJECT NO. ERC-21-51
DESIGN BY: DAB
DRAWN BY: RH
CHECKED BY: DAB
DRAWING NO. S-1
SHEET: 22 OF 35

NOTE:

1. INSTALL SLIDE GATES PER MANUFACTURER'S RECOMMENDATIONS.
2. GROUT 1" SPACE BETWEEN THE SEAT AND CONCRETE USING 5,000 PSI NON-SHRINK GROUT AFTER THE GATE HAS BEEN MOUNTED ON THE ANCHOR BOLTS.

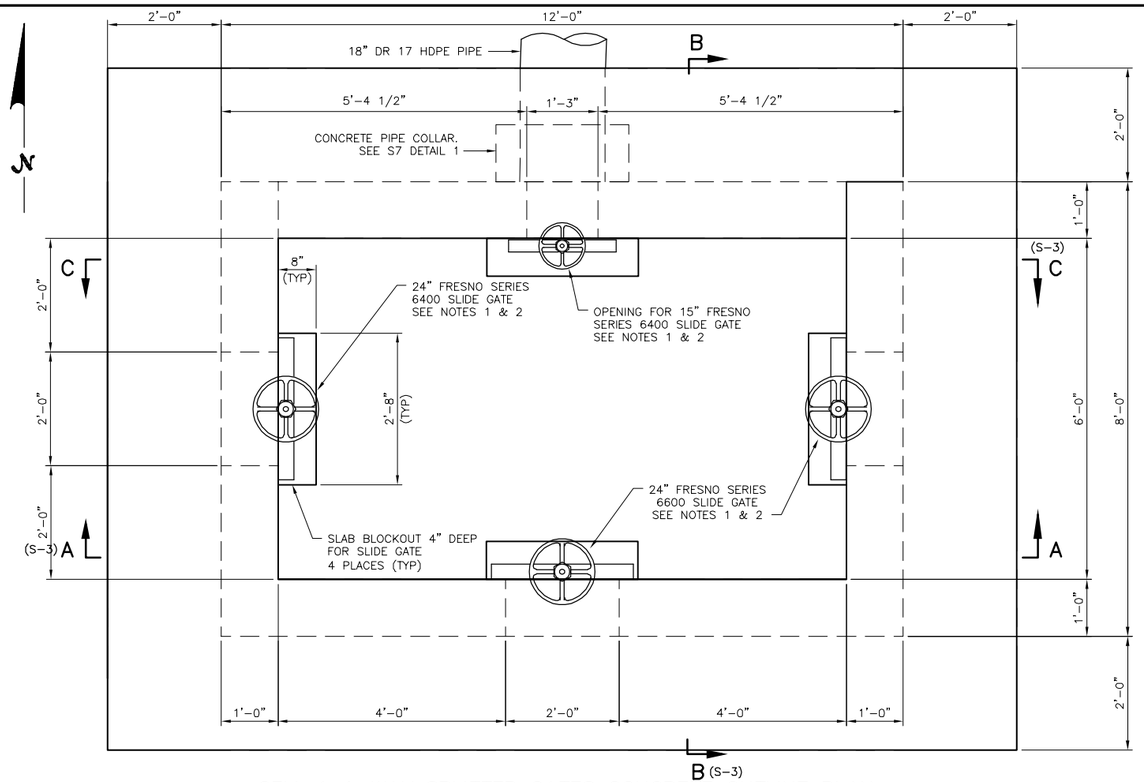

CELL 1 4-WAY SPLITTER GATES CONCRETE OUTLINE PLAN
SCALE: 3/4"=1'-0"

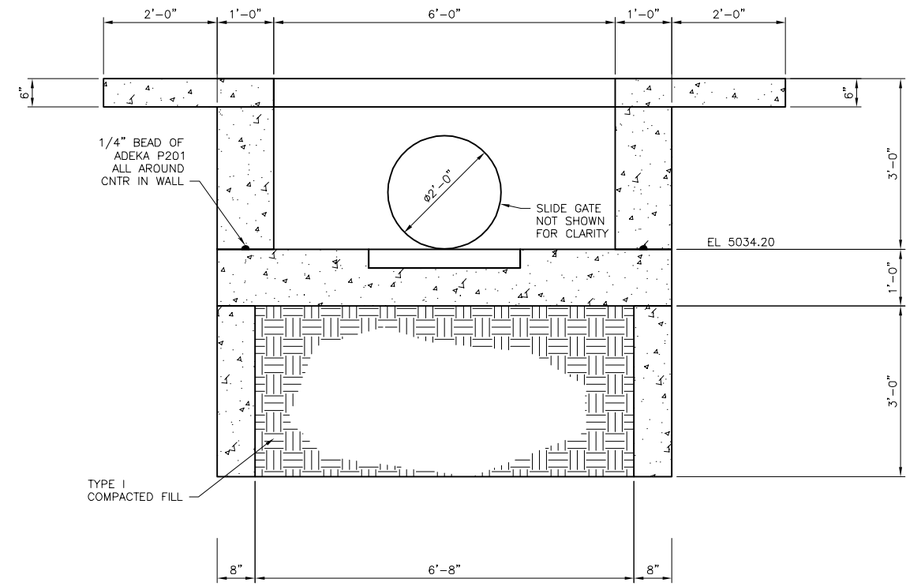

SECTION B-B
SCALE: 3/4"=1'-0"
(ELEVATION LOOKING WEST SIMILAR)

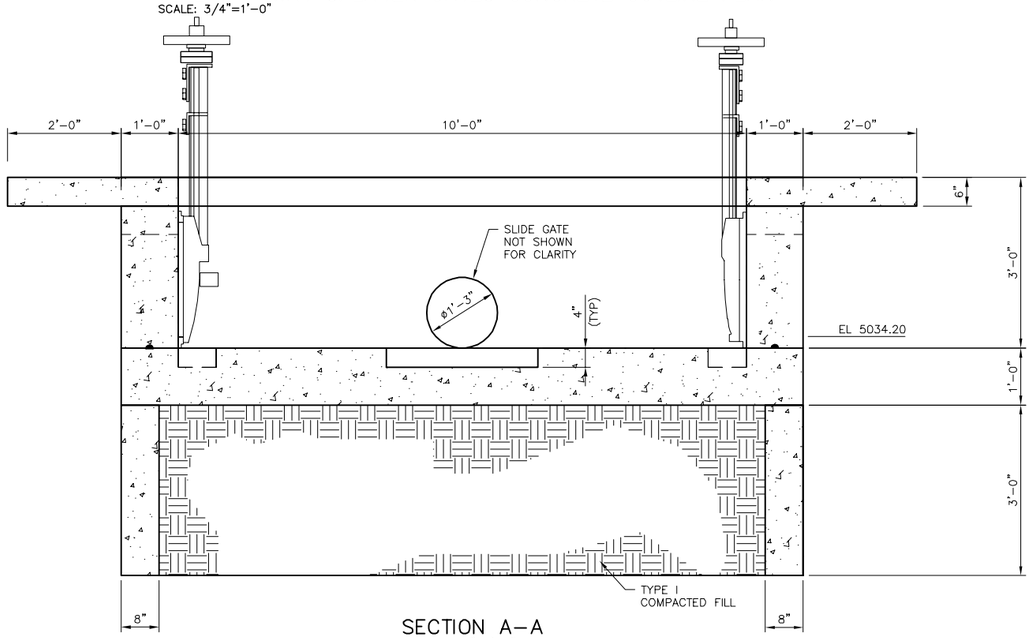

SECTION A-A
SCALE: 3/4"=1'-0"

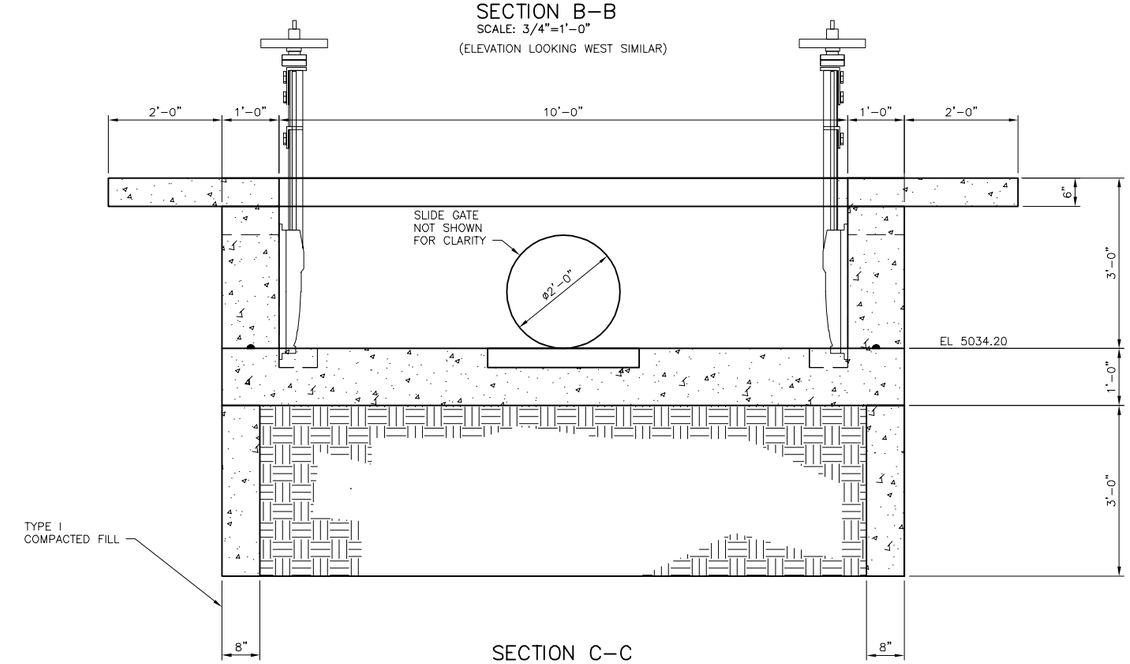

SECTION C-C
SCALE: 3/4"=1'-0"

REVISIONS			
REV	DATE	DESCRIPTION	APPRVD BY
	9/14/22	ISSUED FOR BID – NOT FOR CONSTRUCTION	JLB

0 1/2 1 2
2" AT FULL SIZE
SCALE ACCORDINGLY

CONSULTANTS:

ERC
225 Union Blvd, STE 325
Lakewood, CO 80228
PH: 303.679.4820

SM&RC Structural Engineers Inc.
215 S. Wadsworth Blvd., Suite 320
Lakewood, CO 80226
303.274.8656
f 303.484.3777

CLIENT:

City of Thornton
9500 Civic Center Drive
Thornton, CO 80229

THORNTON GROUNDWATER RECHARGE PROJECT TRIAL SITE

CELL 1 – 4-WAY SPLITTER BOX W/ SLIDE GATES
CONCRETE OUTLINE PLAN AND SECTIONS

SMRC PROJECT NO. ERC-21-51
DESIGN BY: DAB
DRAWN BY: RH
CHECKED BY: DAB

DRAWING NO. S-2

SHEET: 23 OF 35

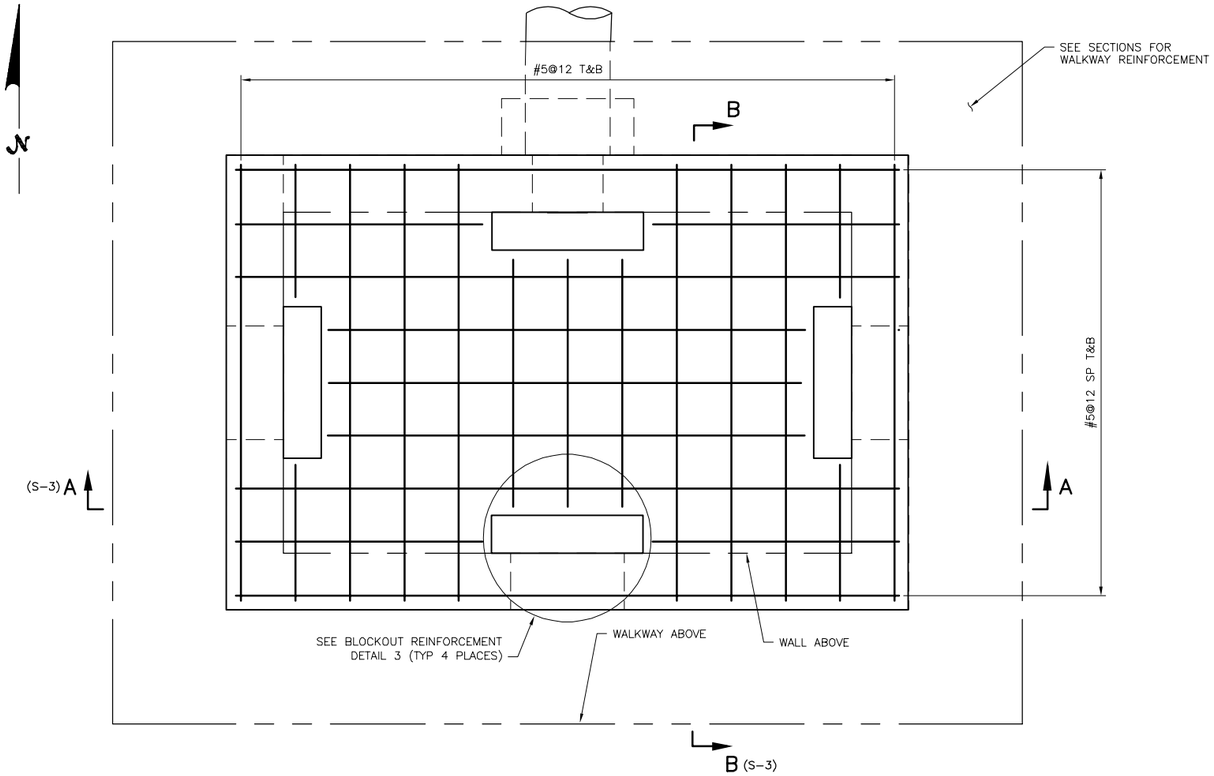

CELL 1 4-WAY SPLITTER GATES SLAB CONCRETE REINFORCEMENT PLAN
SCALE: 3/4"=1'-0"

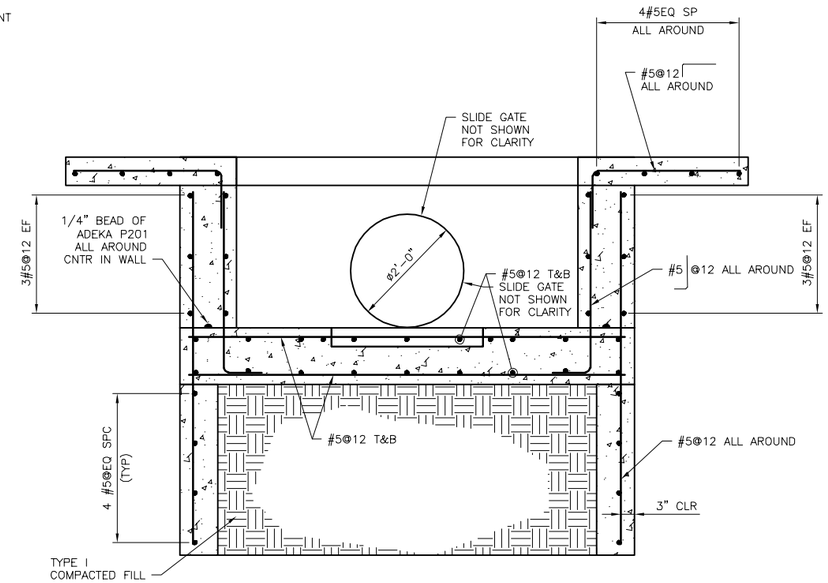

SECTION B-B CONCRETE REINFORCEMENT
SCALE: 3/4"=1'-0"

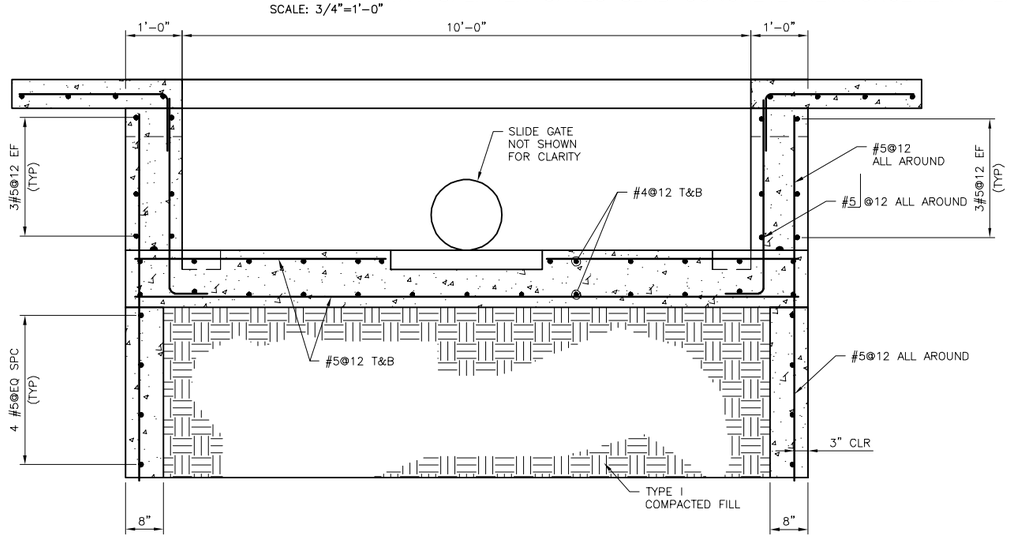

SECTION A-A CONCRETE REINFORCEMENT
SCALE: 3/4"=1'-0"

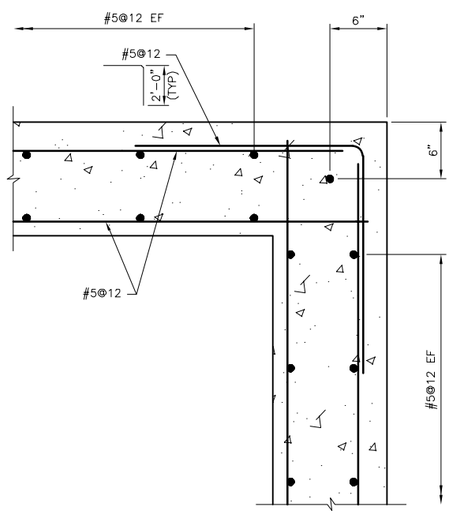

STANDARD DOUBLE LAYER CORNER DETAIL (1)
SCALE: 1 1/2" = 1'-0"

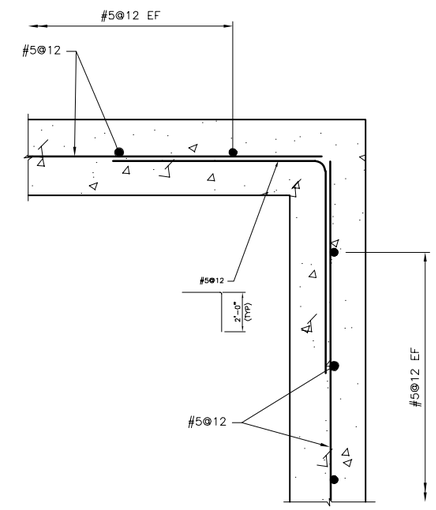

STANDARD SINGLE LAYER CORNER DETAIL (2)
SCALE: 1 1/2" = 1'-0"

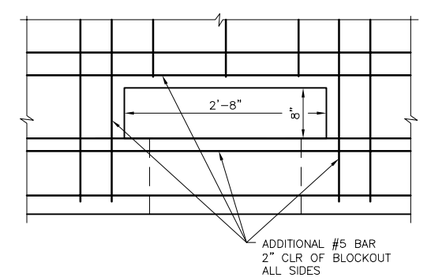

BLOCKOUT REINFORCEMENT DETAIL 3 (3)

REV	DATE	DESCRIPTION	APPRVD BY
	9/14/22	ISSUED FOR BID – NOT FOR CONSTRUCTION	JLB

REVISIONS

0 1/2 1 2
2" AT FULL SIZE
SCALE ACCORDINGLY

CONSULTANTS:
ERC
225 Union Blvd, STE 325
Lakewood, CO 80228
PH: 303.679.4820

SMRC Structural Engineers Inc.
215 S. Wadsworth Blvd.,
Suite 320
Lakewood, CO 80226
303.274.8656
f 303.484.3777

CLIENT:
City of Thornton
9500 Civic Center Drive
Thornton, CO 80229

THORNTON GROUNDWATER RECHARGE PROJECT TRIAL SITE

CELL 1 – 4-WAY SPLITTER BOX W/ SLIDE GATES
CONCRETE REINFORCEMENT PLAN AND SECTIONS

SMRC PROJECT NO.: ERC-21-51
DESIGN BY: DAB
DRAWN BY: RH
CHECKED BY: DAB

DRAWING NO.: S-3

SHEET: 24 OF 35

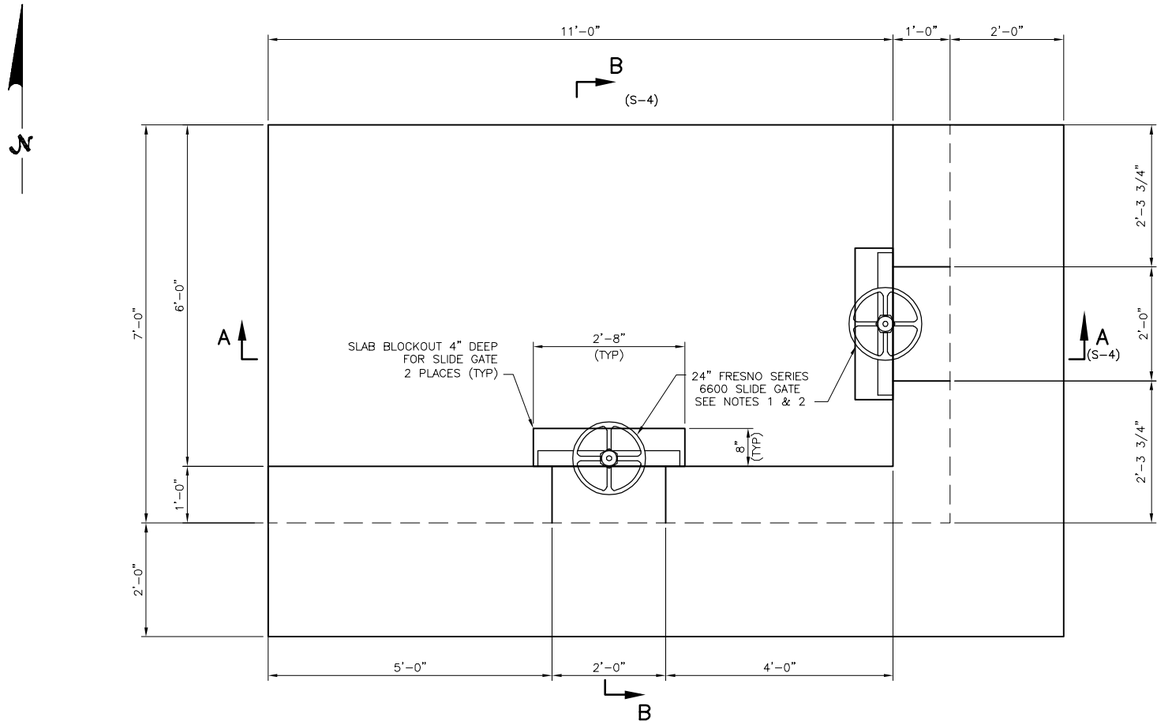

CELL 2 2-WAY SPLITTER GATES CONCRETE OUTLET PLAN
SCALE: 3/4"=1'-0"

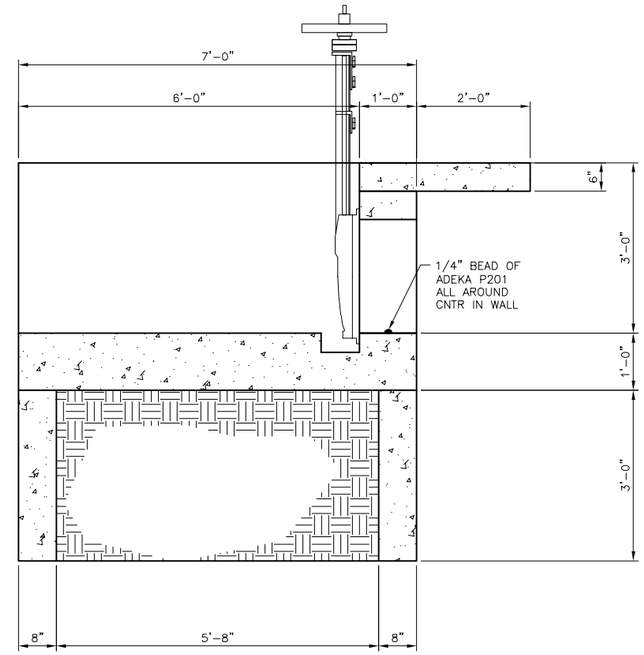

SECTION B-B
SCALE: 3/4"=1'-0"

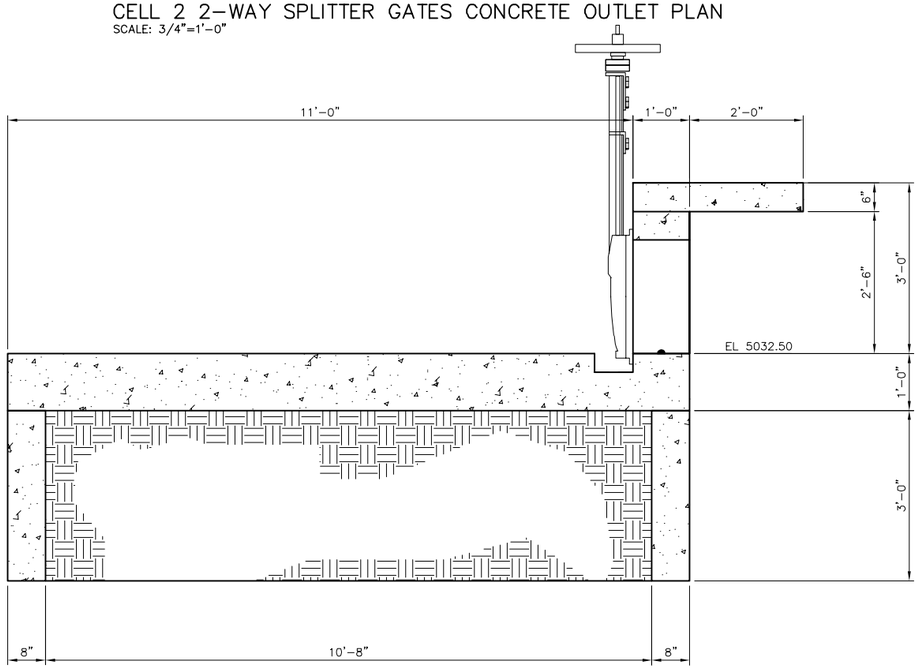

SECTION A-A
SCALE: 3/4"=1'-0"

NOTE:

1. INSTALL SLIDE GATES PER MANUFACTURER'S RECOMMENDATIONS.
2. GROUT 1" SPACE BETWEEN THE SEAT AND CONCRETE USING 5,000 PSI NON-SHRINK GROUT AFTER THE GATE HAS BEEN MOUNTED ON THE ANCHOR BOLTS.

REVISIONS			
REV	DATE	DESCRIPTION	APPRVD BY
	9/14/22	ISSUED FOR BID – NOT FOR CONSTRUCTION	JLB

0 1/2 1 2
2" AT FULL SIZE
SCALE ACCORDINGLY

CONSULTANTS:

ERC
225 Union Blvd, STE 325
Lakewood, CO 80228
PH: 303.679.4820

SMRC Structural Engineers Inc.
215 S. Wadsworth Blvd.,
Suite 320
Lakewood, CO 80226
303.274.8656
f 303.484.3777

CLIENT:

City of Thornton
9500 Civic Center Drive
Thornton, CO 80229

THORNTON GROUNDWATER RECHARGE PROJECT TRIAL SITE

CELL 2 – 2-WAY SPLITTER BOX W/ SLIDE GATES
CONCRETE OUTLINE PLAN AND SECTIONS

SMRC PROJECT NO.	ERC-21-51
DESIGN BY:	DAB
DRAWN BY:	RH
CHECKED BY:	DAB
DRAWING NO.	S-4
SHEET:	25 OF 35

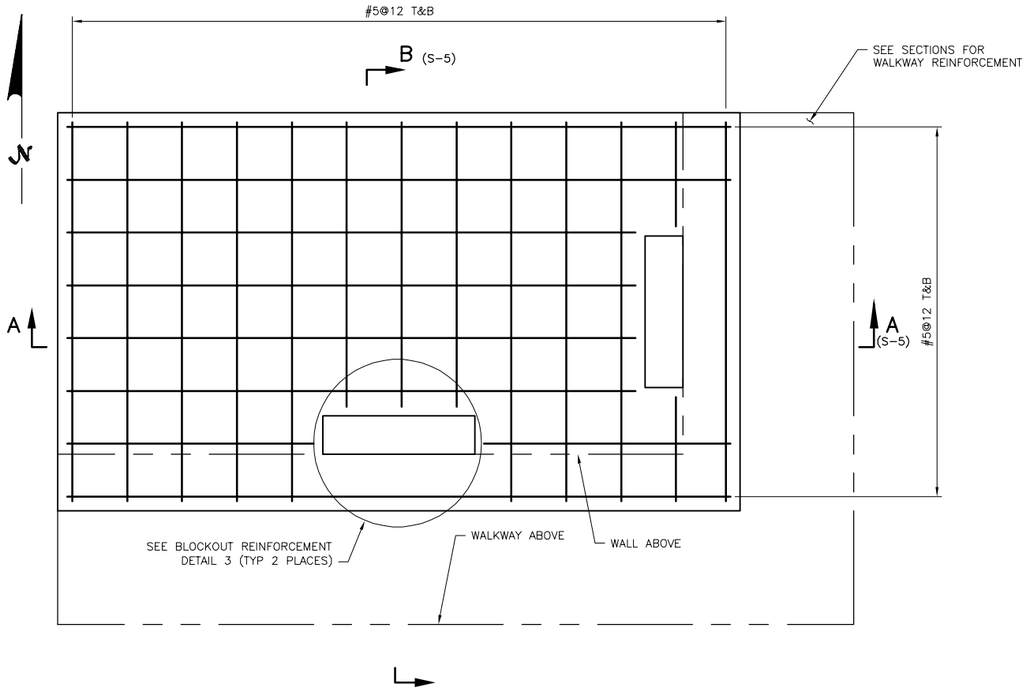

CELL 2 2-WAY SPLITTER GATES CONCRETE REINFORCEMENT PLAN
SCALE: 3/4"=1'-0"

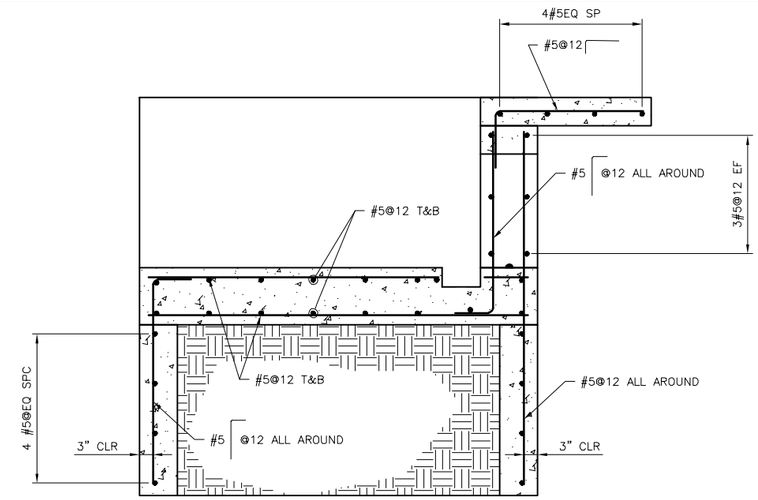

SECTION B-B CONCRETE REINFORCEMENT
SCALE: 3/4"=1'-0"

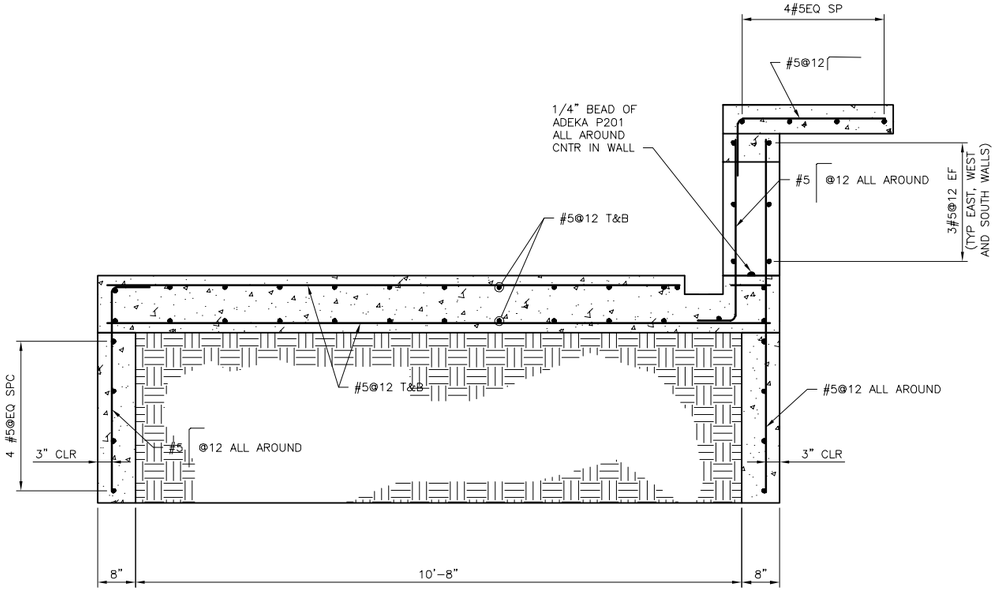

SECTION A-A CONCRETE REINFORCEMENT
SCALE: 3/4"=1'-0"

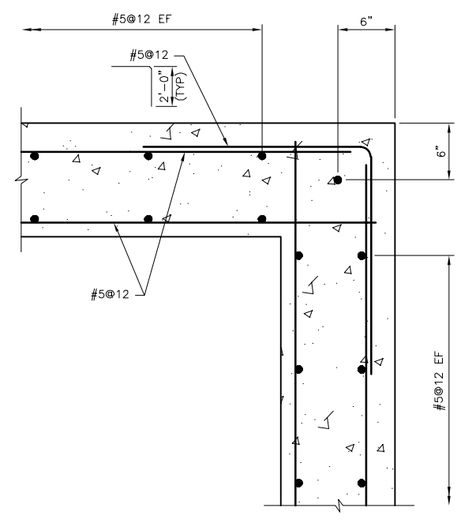

STANDARD DOUBLE LAYER CORNER DETAIL (1)
SCALE: 1 1/2" = 1'-0"

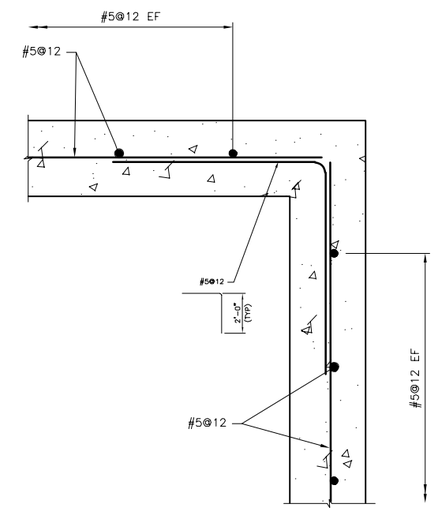

STANDARD SINGLE LAYER CORNER DETAIL (2)
SCALE: 1 1/2" = 1'-0"

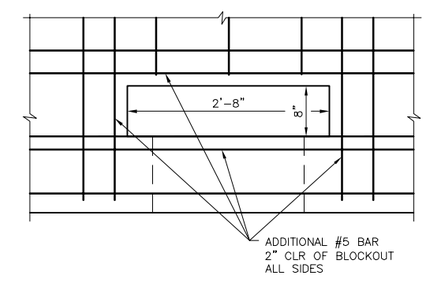

BLOCKOUT REINFORCEMENT DETAIL 3 (3)

REVISIONS			
REV	DATE	DESCRIPTION	APPRVD BY
	9/14/22	ISSUED FOR BID - NOT FOR CONSTRUCTION	JLB

0 1/2 1 2
2" AT FULL SIZE
SCALE ACCORDINGLY

CONSULTANTS:
ERC
225 Union Blvd, STE 325
Lakewood, CO 80228
PH: 303.679.4820

SMRC Structural Engineers Inc.
215 S. Wadsworth Blvd., Suite 320
Lakewood, CO 80226
303.274.8656
f 303.484.3777

CLIENT:
City of Thornton
9500 Civic Center Drive
Thornton, CO 80229

THORNTON GROUNDWATER RECHARGE PROJECT TRIAL SITE

CELL 2 - 2-WAY SPLITTER BOX W/ SLIDE GATES
CONCRETE REINFORCEMENT PLAN AND SECTIONS

SMRC PROJECT NO. ERC-21-51
DESIGN BY: DAB
DRAWN BY: RH
CHECKED BY: DAB
DRAWING NO. S-5
SHEET: 26 OF 35

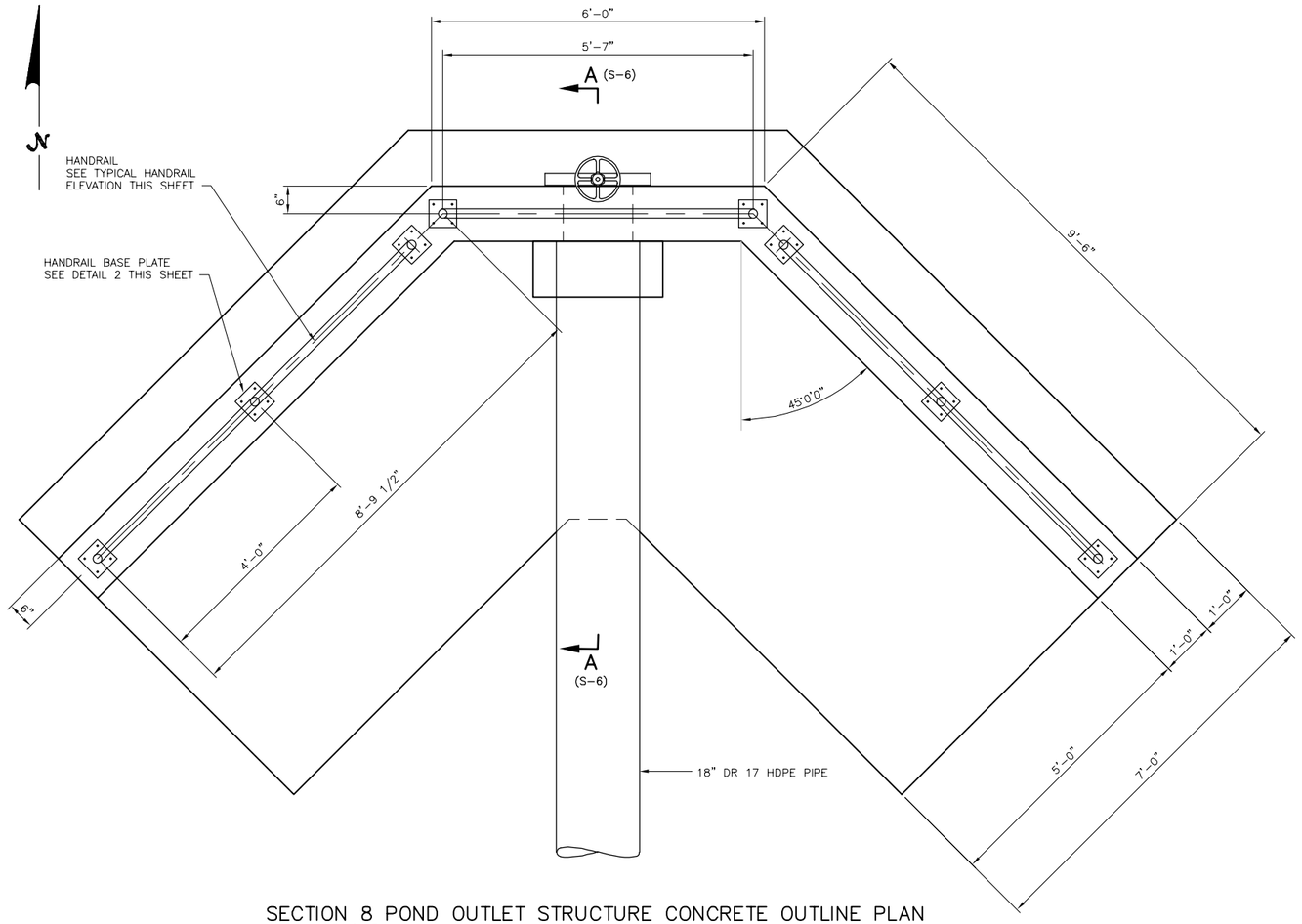

SECTION 8 POND OUTLET STRUCTURE CONCRETE OUTLINE PLAN
SCALE: 3/4"=1'-0"

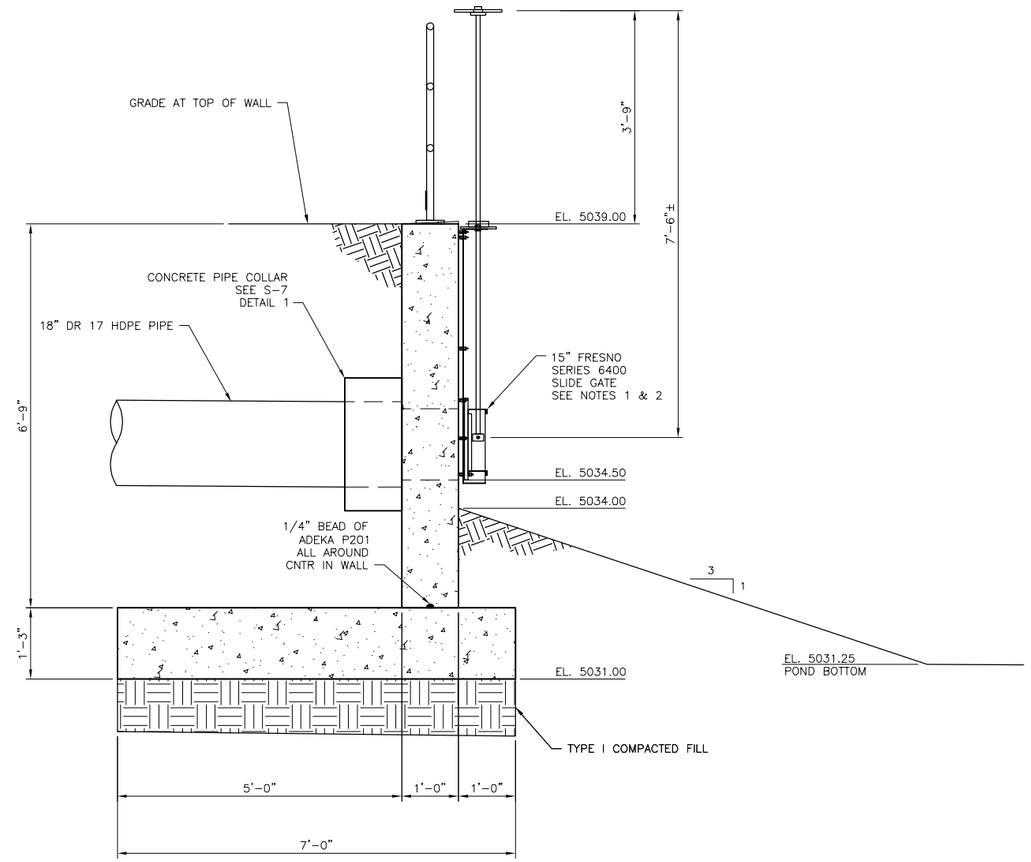

SECTION A–A
SCALE: 3/4"=1'-0"

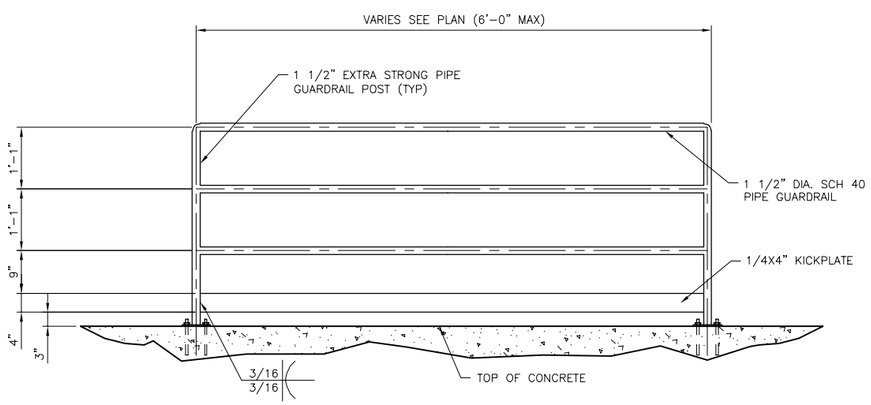

TYPICAL HANDRAIL ELEVATION (1)
SCALE: 3/4" = 1'-0"

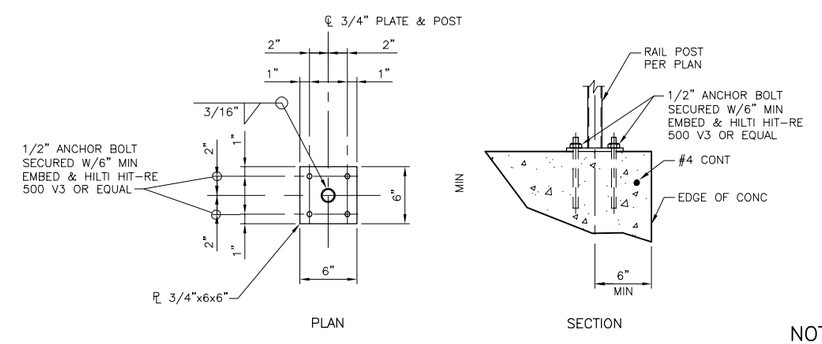

HANDRAIL BASEPLATE CONNECTION (2)
SCALE: 1 1/2" = 1'-0"

NOTE:

1. INSTALL SLIDE GATES PER MANUFACTURER'S RECOMMENDATIONS.
2. GROUT 1" SPACE BETWEEN THE SEAT AND CONCRETE USING 5,000 PSI NON-SHRINK GROUT AFTER THE GATE HAS BEEN MOUNTED ON THE ANCHOR BOLTS.

REVISIONS			
REV	DATE	DESCRIPTION	APPRVD BY
	9/14/22	ISSUED FOR BID – NOT FOR CONSTRUCTION	JLB

0 1/2 1 2
2" AT FULL SIZE
SCALE ACCORDINGLY

CONSULTANTS:
ERC
225 Union Blvd, STE 325
Lakewood, CO 80228
PH: 303.679.4820

SM&RC Structural Engineers Inc.
215 S. Wadsworth Blvd.,
Suite 320
Lakewood, CO 80226
303.274.8656
f 303.484.3777

CLIENT:
City of Thornton
9500 Civic Center Drive
Thornton, CO 80229

THORNTON GROUNDWATER RECHARGE PROJECT TRIAL SITE

SECTION 8 POND OUTLET STRUCTURE
CONCRETE OUTLINE PLAN AND SECTION

SMRC PROJECT NO. ERC-21-51
DESIGN BY: DAB
DRAWN BY: RH
CHECKED BY: DAB
DRAWING NO. S-6
SHEET: 27 OF 35

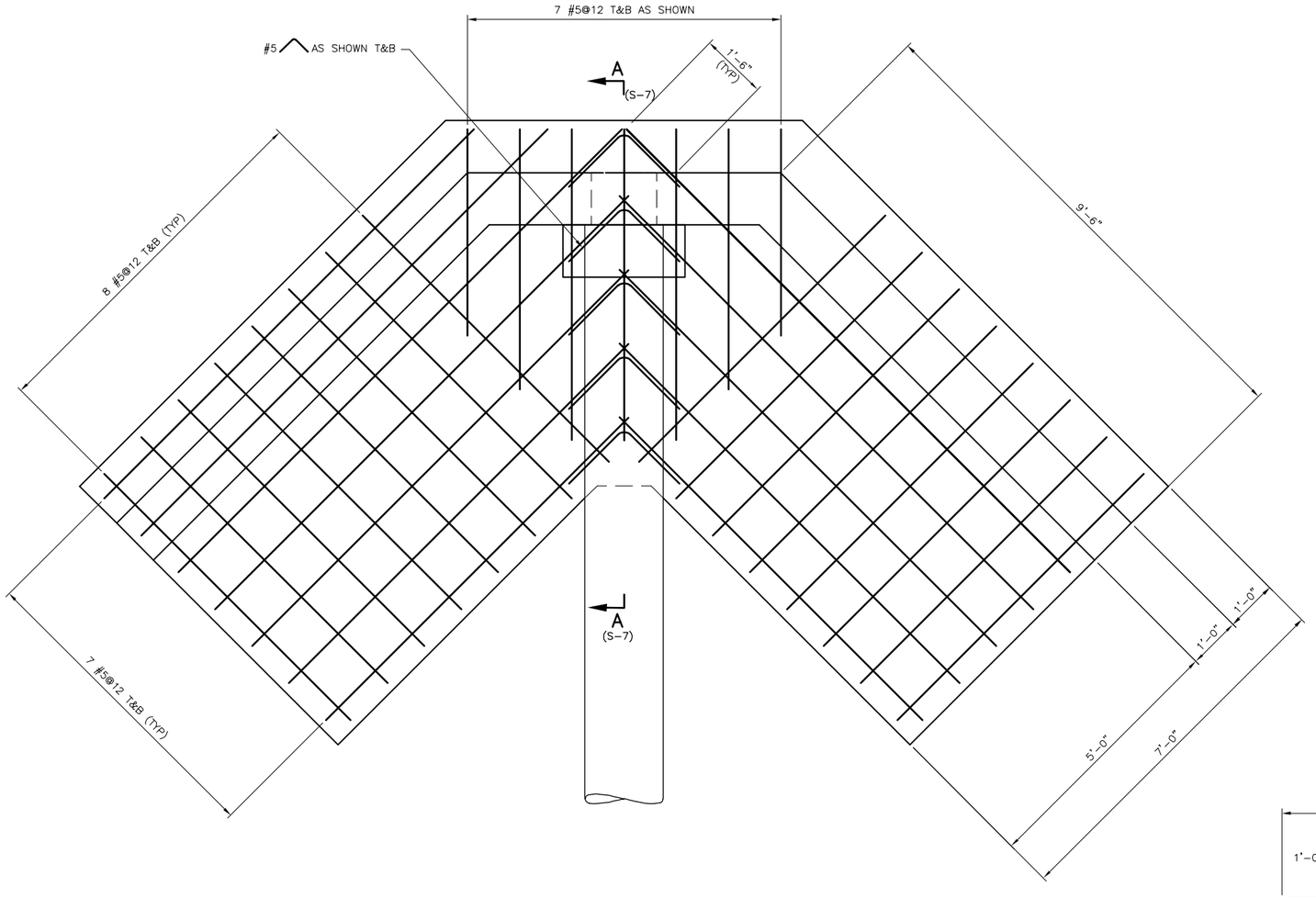

SECTION 8 POND OUTLET STRUCTURE CONCRETE REINFORCEMENT PLAN
SCALE: 3/4"=1'-0"

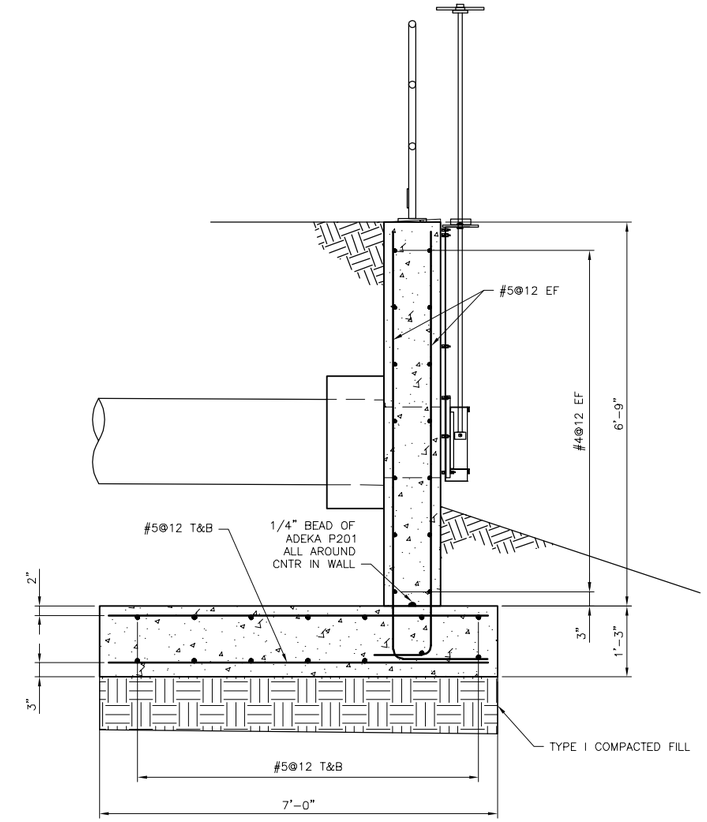

SECTION A A CONCRETE REINFORCEMENT
SCALE: 3/4"=1'-0"

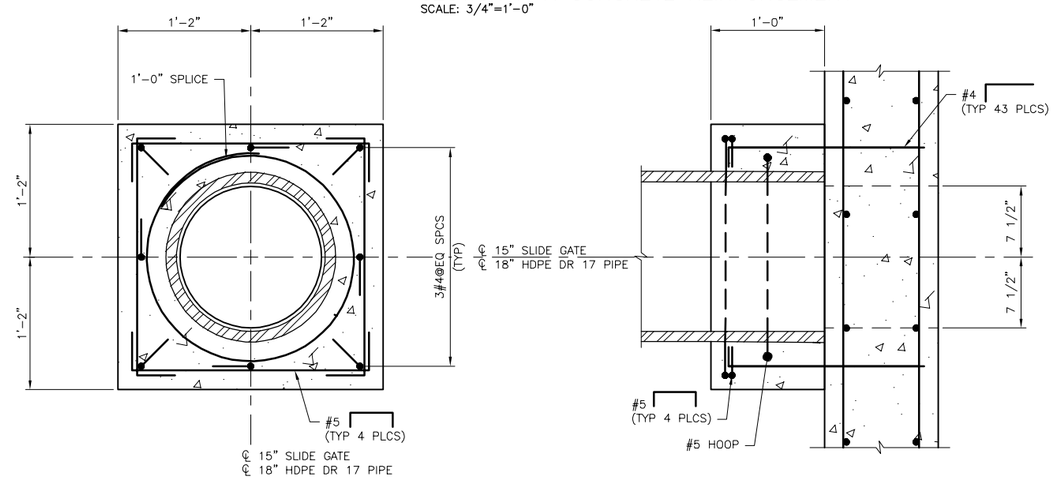

CONCRETE PIPE COLLAR (1)
SCALE: 1 1/2" = 1'-0"

REVISIONS			
	9/14/22	ISSUED FOR BID – NOT FOR CONSTRUCTION	JLB
REV	DATE	DESCRIPTION	APPRVD BY

0 1/2 1 2
2" AT FULL SIZE
SCALE ACCORDINGLY

CONSULTANTS:
ERC
225 Union Blvd, STE 325
Lakewood, CO 80228
PH: 303.679.4820

SMRC Structural Engineers Inc.
215 S. Wadsworth Blvd., Suite 320
Lakewood, CO 80226
303.274.8656
f 303.484.3777

CLIENT:
City of Thornton
9500 Civic Center Drive
Thornton, CO 80229

THORNTON GROUNDWATER RECHARGE PROJECT TRIAL SITE

SECTION 8 POND OUTLET STRUCTURE
CONCRETE REINFORCEMENT PLAN AND SECTION

SMRC PROJECT NO. ERC-21-51
DESIGN BY: DAB
DRAWN BY: RH
CHECKED BY: DAB
DRAWING NO. S-7
SHEET: 28 OF 35

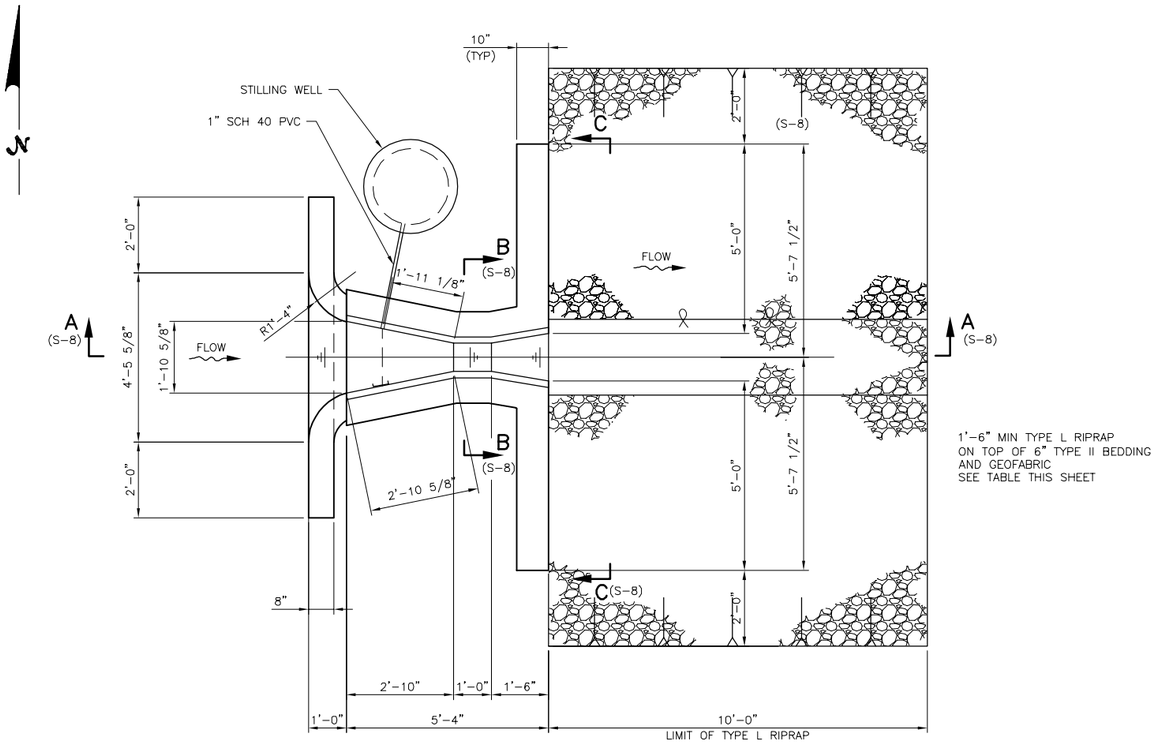

9" PARSHALL FLUME CONCRETE OUTLINE PLAN
SCALE: 1/2"=1'-0"

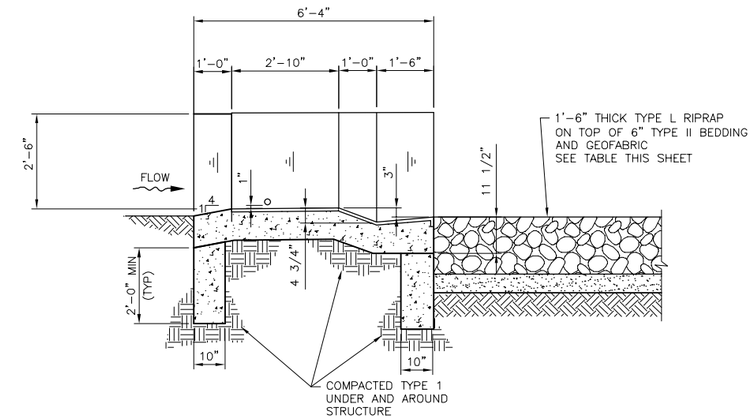

SECTION A–A
SCALE: 1/2"=1'-0"

TYPE L RIPRAP GRADATION (D50 = 9 INCHES)	
STONE SIZE	PERCENT OF MATERIAL SMALLER THAN STONE SIZE
15	70 – 100
12	50 – 70
9	35 – 50
3	2 – 10

TYPE II BEDDING GRADATION	
US STANDARD SIEVE SIZE	PERCENT BY WEIGHT PASSING
3"	90 – 100
3/4"	20 – 90
No. 4	0 – 20
No. 200	0 – 3

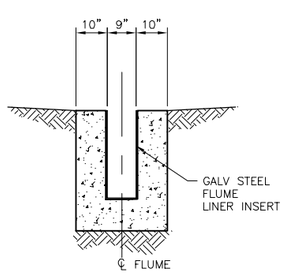

SECTION B–B
SCALE: 1/2"=1'-0"

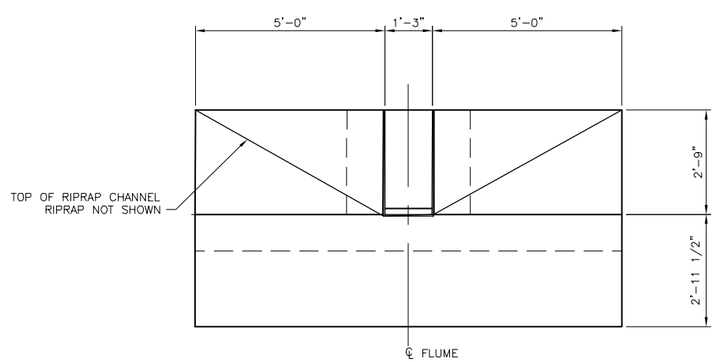

SECTION C–C
SCALE: 1/2"=1'-0"

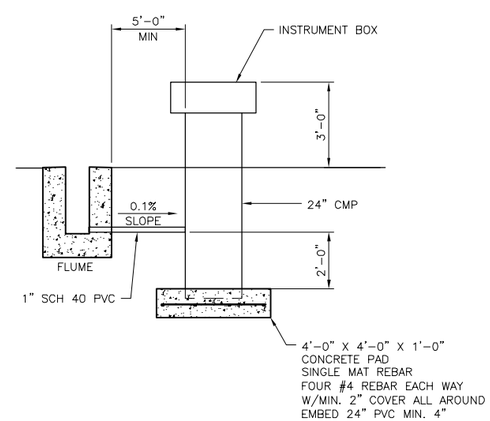

TYPICAL FLUME STILLING WELL
SCALE: 3/8"=1'-0"

NOTE:
PROVIDE WATERTIGHT UNIONS AT BOTH ENDS OF INTAKE PIPE.

NOTES:
1. SCALE AS NOTED
2. GEOFABRIC SHALL BE MIRAFI 140N SERIES NON WOVEN POLYPROPYLENE. WRAP BEDDING TOP, BOTTOM, AND SIDES IN GEOFABRIC.

CELL 1 FLUME:
UPSTREAM ELEVATION = 5034.15
CREST ELEVATION = 5034.40
DOWNSTREAM ELEVATION = 5034.15

CELL 2 FLUME:
UPSTREAM ELEVATION = 5030.94
CREST ELEVATION = 5031.19
DOWNSTREAM ELEVATION = 5030.94

REVISIONS			
REV	DATE	DESCRIPTION	APPRVD BY
	9/14/22	ISSUED FOR BID – NOT FOR CONSTRUCTION	JLB

0 1/2 1 2
2" AT FULL SIZE
SCALE ACCORDINGLY

CONSULTANTS:
ERC
225 Union Blvd, STE 325
Lakewood, CO 80228
PH: 303.679.4820

SM&RC Structural Engineers Inc.
215 S. Wadsworth Blvd., Suite 320
Lakewood, CO 80226
303.274.8656
f 303.484.3777

CLIENT:
City of Thornton
9500 Civic Center Drive
Thornton, CO 80229

THORNTON GROUNDWATER RECHARGE PROJECT TRIAL SITE

9" PARSHALL FLUME
CONCRETE OUTLILNE PLAN AND SECTIONS

SMRC PROJECT NO. ERC–21–51
DESIGN BY: DAB
DRAWN BY: RH
CHECKED BY: DAB
DRAWING NO. S–8
SHEET 29 OF 35

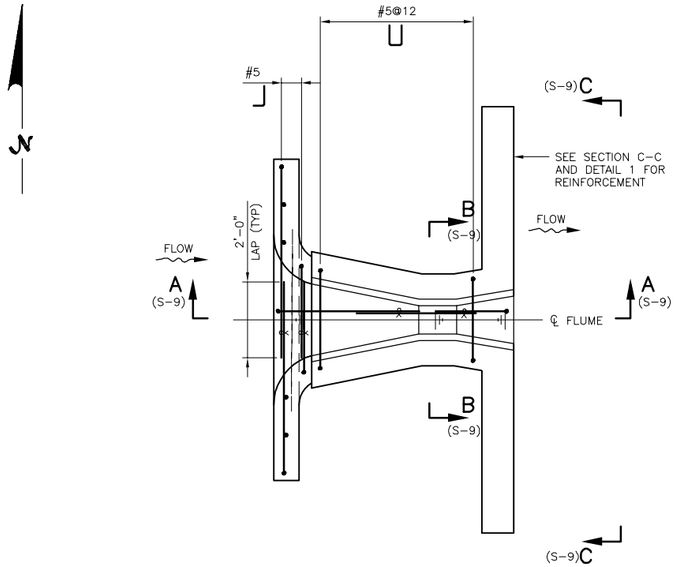

9" PARSHALL FLUME CONCRETE REINFORCEMENT PLAN
SCALE: 3/4"=1'-0"

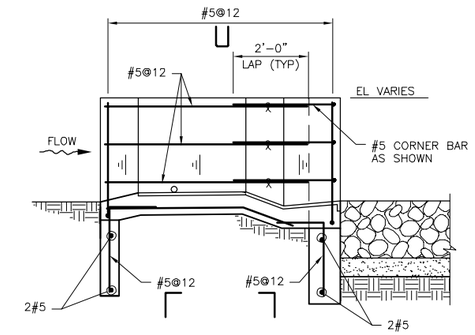

SECTION A-A
SCALE: 1/2"=1'-0"

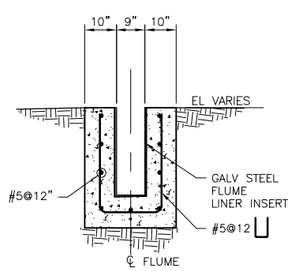

SECTION B-B
SCALE: 1/2"=1'-0"

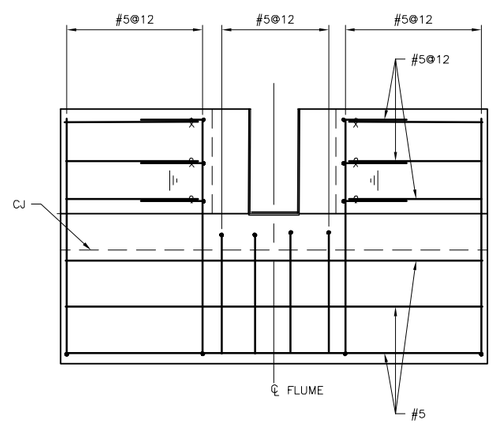

SECTION C-C
SCALE: 1/2"=1'-0"

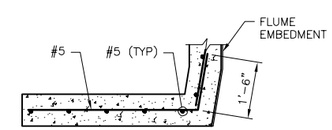

DETAIL 1
SCALE: 1/2"=1'-0"

REVISIONS			
	9/14/22	ISSUED FOR BID – NOT FOR CONSTRUCTION	JLB
REV	DATE	DESCRIPTION	APPRVD BY

0 1/2 1 2
2" AT FULL SIZE
SCALE ACCORDINGLY

CONSULTANTS:

ERC
225 Union Blvd, STE 325
Lakewood, CO 80228
PH: 303.679.4820

SMRC Structural Engineers Inc.
215 S. Wadsworth Blvd.,
Suite 320
Lakewood, CO 80226
303.274.8656
f 303.484.3777

CLIENT:

City of Thornton
9500 Civic Center Drive
Thornton, CO 80229

THORNTON GROUNDWATER RECHARGE PROJECT TRIAL SITE

9" PARSHALL FLUME
CONCRETE REINFORCEMENT PLAN AND SECTION

SMRC PROJECT NO. ERC-21-51
DESIGN BY: DAB
DRAWN BY: RH
CHECKED BY: DAB

DRAWING NO. S-9

SHEET: 30 OF 35

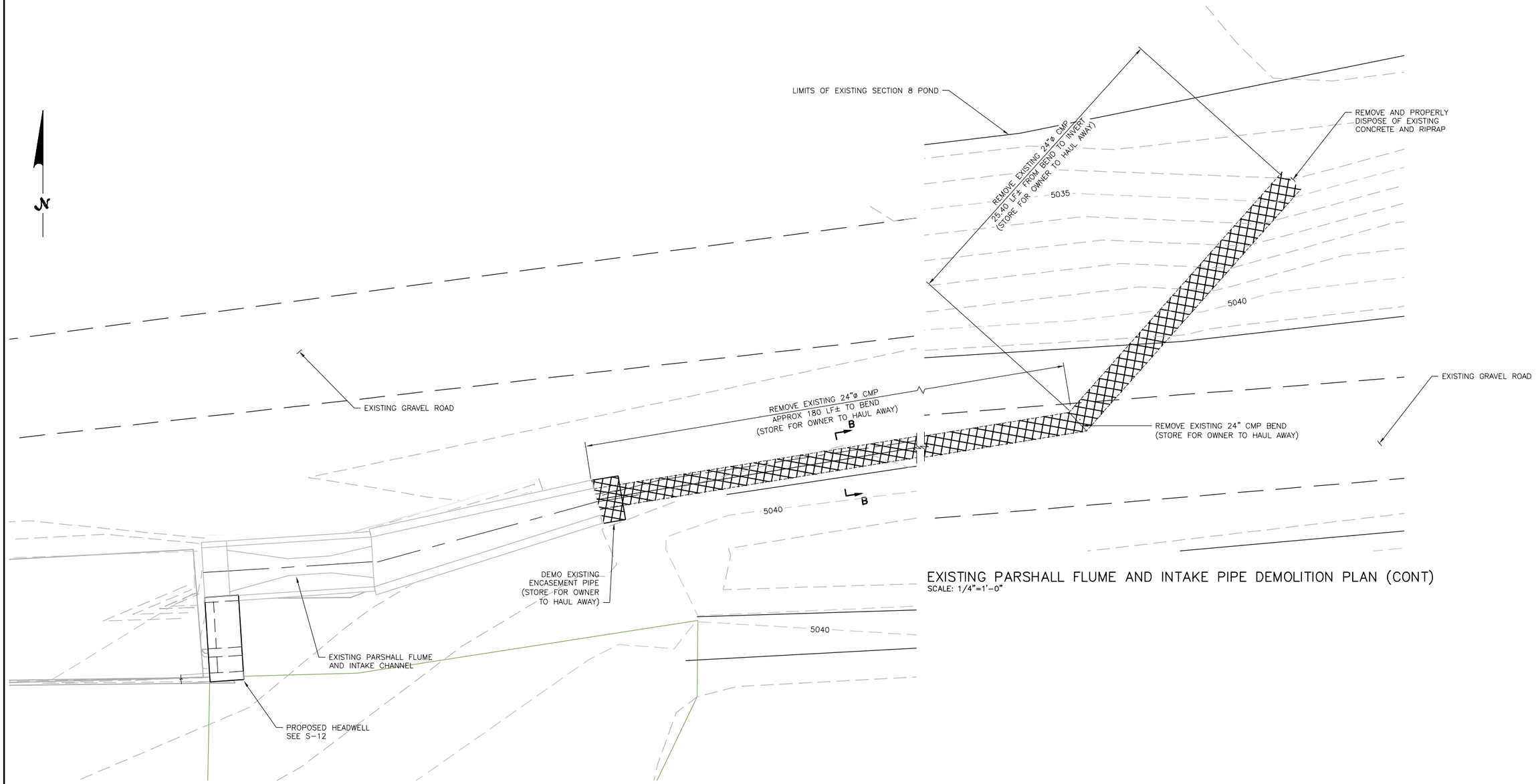

EXISTING PARSHALL FLUME AND INTAKE PIPE DEMOLITION PLAN (CONT)
SCALE: 1/4"=1'-0"

EXISTING PARSHALL FLUME AND INTAKE PIPE DEMOLITION PLAN
SCALE: 1/4"=1'-0"

REVISIONS			
REV	DATE	DESCRIPTION	APPRVD BY
	9/14/22	ISSUED FOR BID – NOT FOR CONSTRUCTION	JLB

0 1/2 1 2
2" AT FULL SIZE
SCALE ACCORDINGLY

CONSULTANTS:

ERC
225 Union Blvd, STE 325
Lakewood, CO 80228
PH: 303.679.4820

SMRC Structural Engineers Inc.
215 S. Wadsworth Blvd., Suite 320
Lakewood, CO 80226
303.274.8656
f 303.484.3777

CLIENT:

City of Thornton
9500 Civic Center Drive
Thornton, CO 80229

THORNTON GROUNDWATER RECHARGE PROJECT TRIAL SITE

SECTION 8 POND PARSHALL FLUME AND INTAKE DEMOLITION PLAN

SMRC PROJECT NO. ERC-21-51
DESIGN BY: DAB
DRAWN BY: RH
CHECKED BY: DAB

DRAWING NO. S-10

SHEET: 31 OF 35

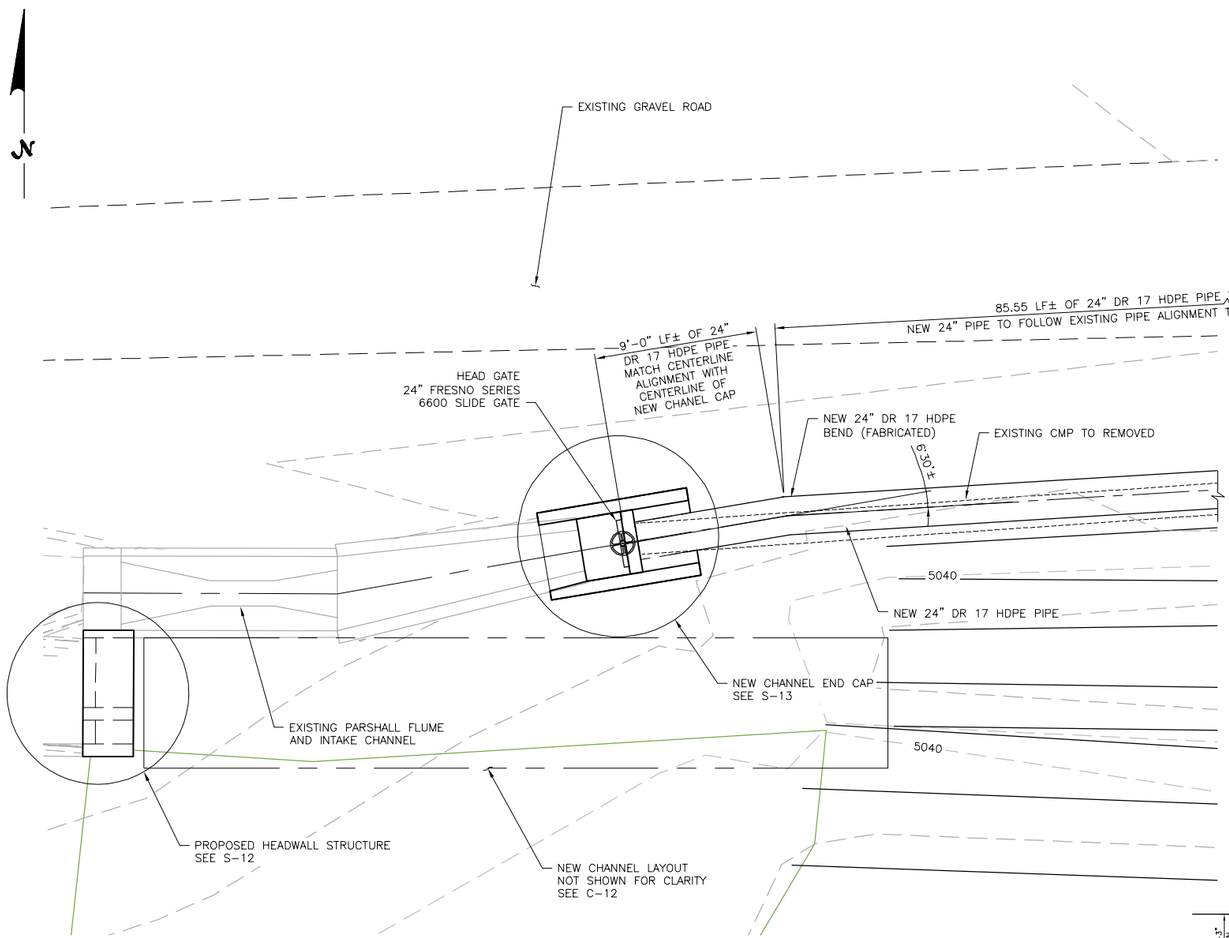

NEW 24" INTAKE PIPE TO POND 8 PLAN
SCALE: 1/4"=1'-0"

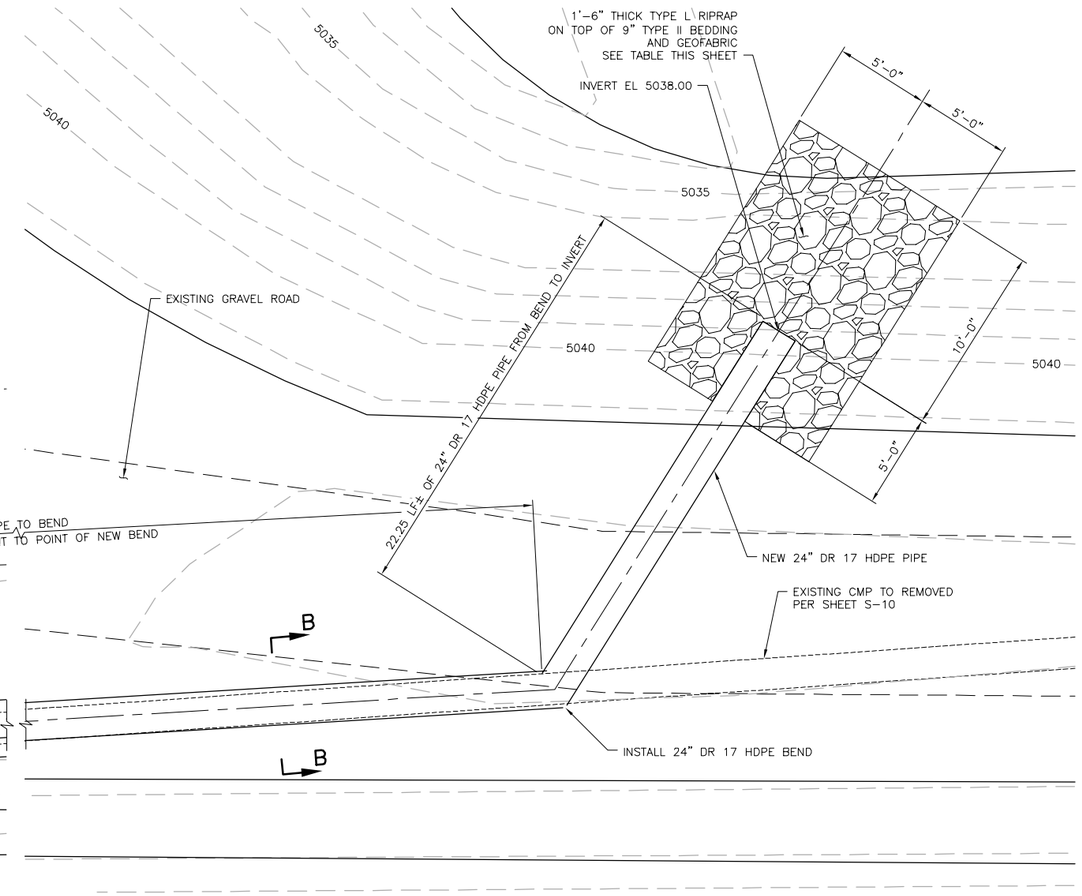

NEW 24" INTAKE PIPE TO POND 8 PLAN (CONT)
SCALE: 1/4"=1'-0"

TYPE L RIPRAP GRADATION (D50 = 9 INCHES)	
STONE SIZE	PERCENT OF MATERIAL SMALLER THAN STONE SIZE
15	70 – 100
12	50 – 70
9	35 – 50
3	2 – 10

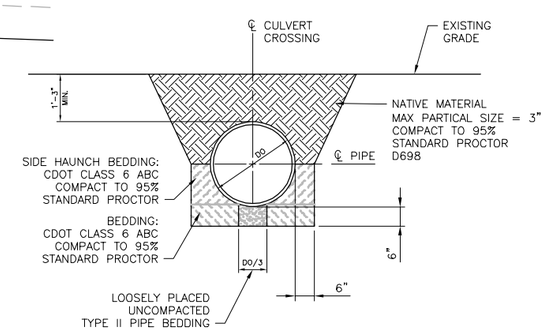

SECTION B–B
SCALE: 1/2"=1'-0"

TYPE II BEDDING GRADATION	
US STANDARD SIEVE SIZE	PERCENT BY WEIGHT PASSING
3"	90 – 100
3/4"	20 – 90
No. 4	0 – 20
No. 200	0 – 3

NOTES:

1. SCALE AS NOTED
2. GEOFABRIC SHALL BE MIRAFI 140N SERIES NON WOVEN POLYPROPYLENE. WRAP BEDDING TOP, BOTTOM, AND SIDES IN GEOFABRIC.

REVISIONS

REV	DATE	DESCRIPTION	APPRVD BY
	9/14/22	ISSUED FOR BID – NOT FOR CONSTRUCTION	JLB

0 1/2 1 2
2" AT FULL SIZE
SCALE ACCORDINGLY

CONSULTANTS:

ERC
225 Union Blvd, STE 325
Lakewood, CO 80228
PH: 303.679.4820

SM&RC Structural Engineers Inc.
215 S. Wadsworth Blvd.,
Suite 320
Lakewood, CO 80226
303.274.8656
f 303.484.3777

CLIENT:

City of Thornton
9500 Civic Center Drive
Thornton, CO 80229

THORNTON GROUNDWATER RECHARGE PROJECT TRIAL SITE

SECTION 8 POND PARSHALL FLUME AND INTAKE IMPROVEMENT PLAN

SMRC PROJECT NO. ERC-21-51
DESIGN BY: DAB
DRAWN BY: RH
CHECKED BY: DAB
DRAWING NO. S-11
SHEET: 32 OF 35

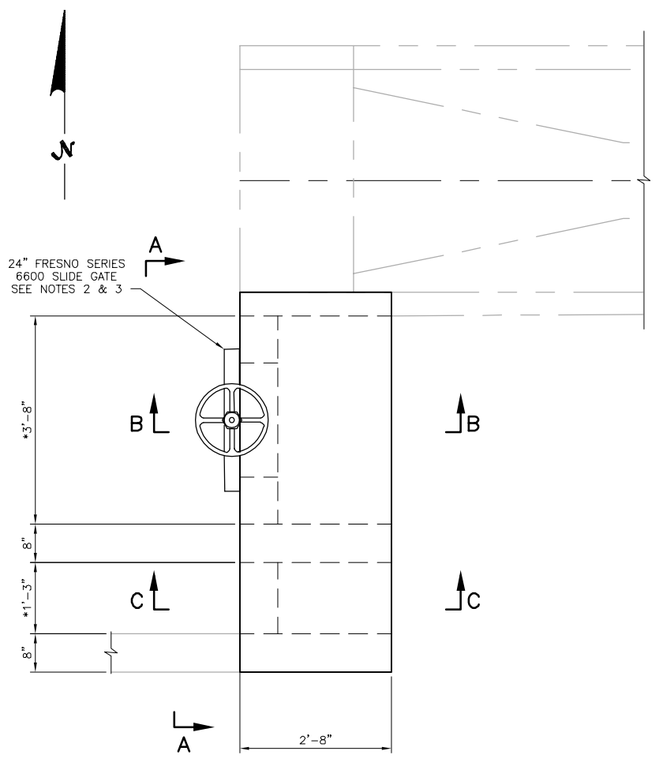

CHANNEL HEADWALL AND PULL GATE PLAN
SCALE: 3/4"=1'-0"

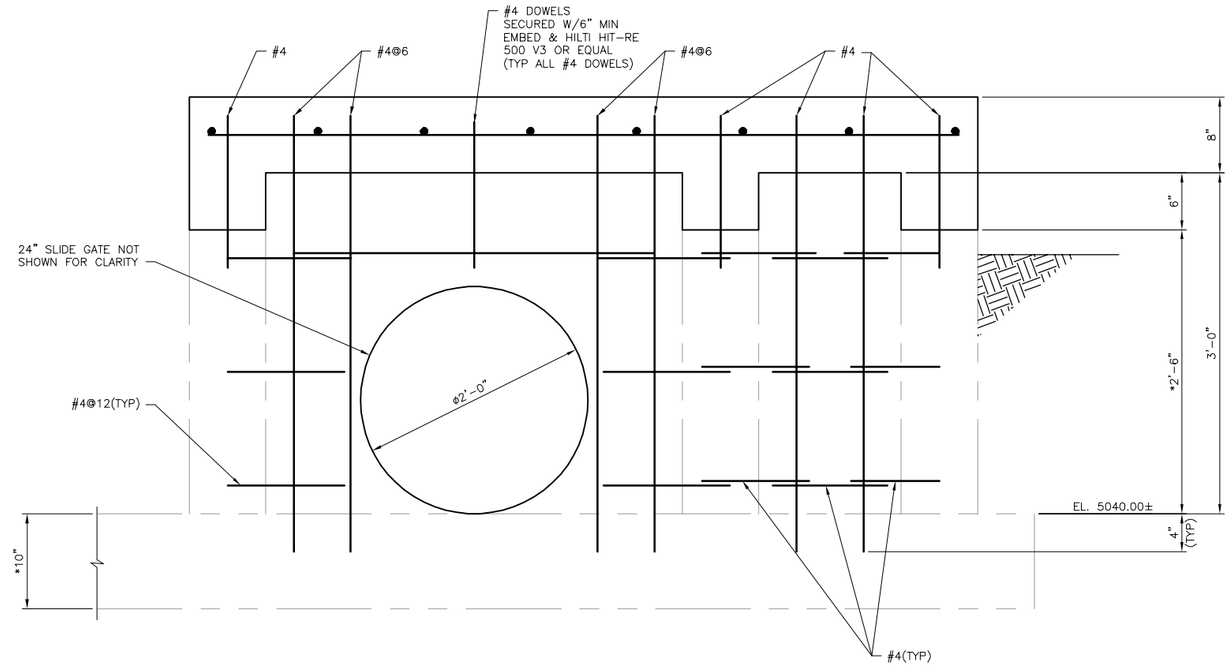

SECTION A-A
SCALE: 1 1/2"=1'-0"
(ALL BARS IN CENTER OF WALL AND SLAB UN)

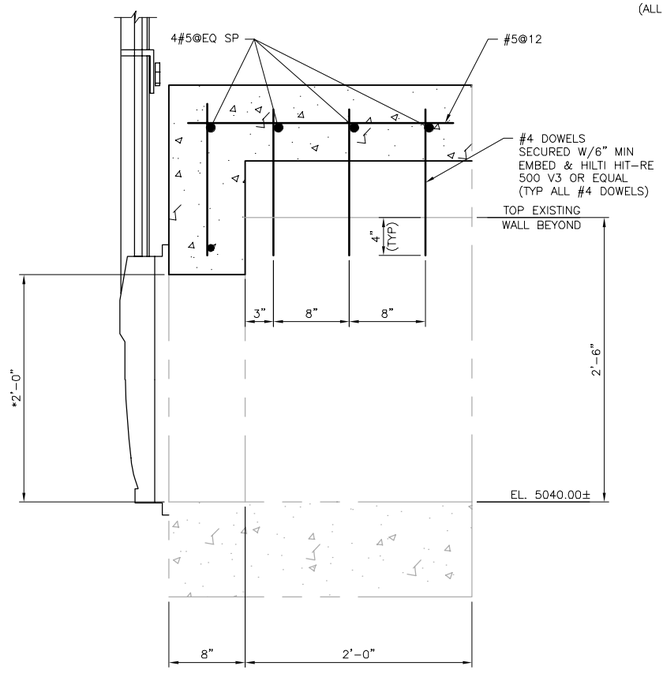

SECTION B-B
SCALE: 1 1/2"=1'-0"

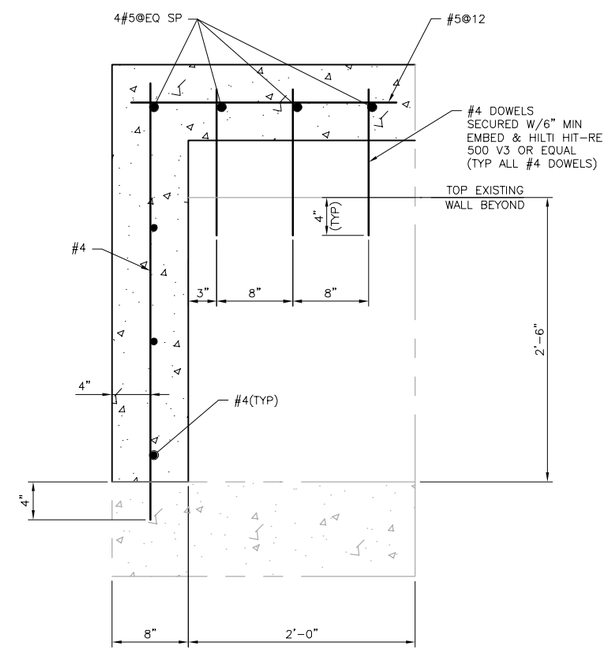

SECTION C-C
SCALE: 1 1/2"=1'-0"

NOTES:

1. * FIELD VERIFY PRIOR TO START OF CONSTRUCTION. CONTACT ENGINEER REGARDING DIMENSIONAL DISCREPANCY.
2. INSTALL SLIDE GATES PER MANUFACTURER'S RECOMMENDATIONS.
3. GROUT 1" SPACE BETWEEN THE SEAT AND CONCRETE USING 5,000 PSI NON-SHRINK GROUT AFTER THE GATE HAS BEEN MOUNTED ON THE ANCHOR BOLTS.

REVISIONS			
	9/14/22	ISSUED FOR BID – NOT FOR CONSTRUCTION	JLB
REV	DATE	DESCRIPTION	APPRVD BY

0 1/2 1 2
2" AT FULL SIZE
SCALE ACCORDINGLY

CONSULTANTS:
ERC
225 Union Blvd, STE 325
Lakewood, CO 80228
PH: 303.679.4820

SMRC Structural Engineers Inc.
215 S. Wadsworth Blvd.,
Suite 320
Lakewood, CO 80226
303.274.8656
f 303.484.3777

CLIENT:
City of Thornton
9500 Civic Center Drive
Thornton, CO 80229

THORNTON GROUNDWATER RECHARGE PROJECT TRIAL SITE

CHANNEL HEADWALL AND SLIDE GATE
PLAN AND SECTIONS

SMRC PROJECT NO. ERC-21-51
DESIGN BY: DAB
DRAWN BY: RH
CHECKED BY: DAB
DRAWING NO. S-12
SHEET: 33 OF 35

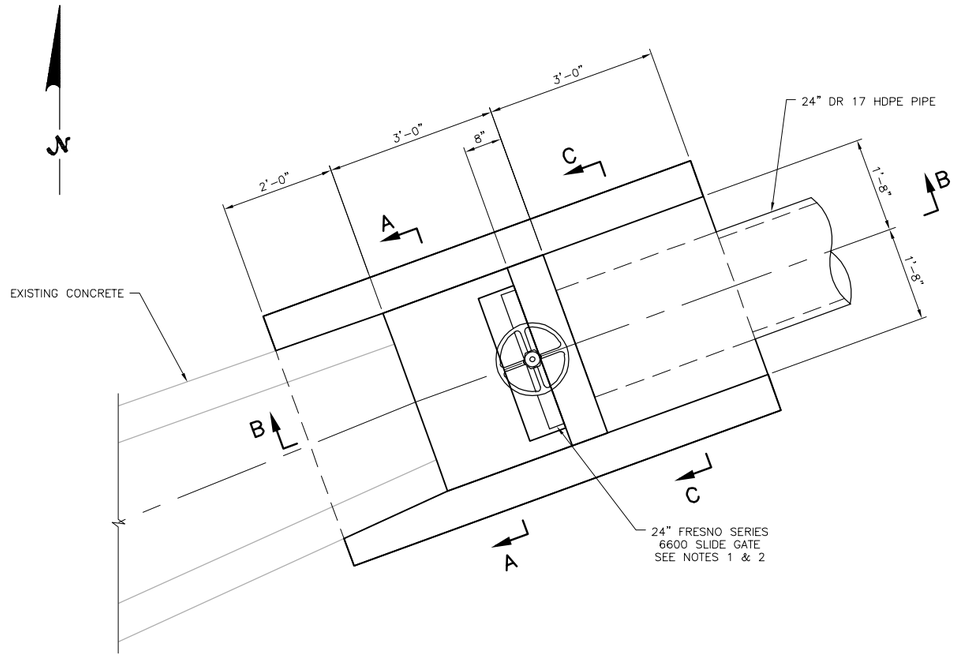

SECTION 8 POND PARSHALL FLUME END CAP PLAN
SCALE: 3/4"=1'-0"

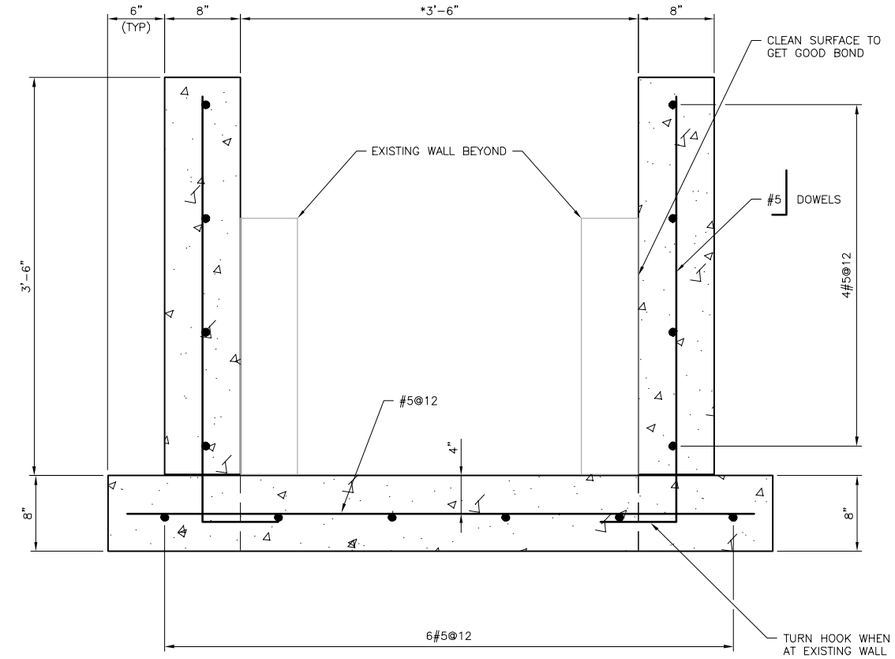

SECTION A–A
SCALE: 1 1/2"=1'-0"
(ALL BARS IN CENTER OF WALL AND SLAB UN)

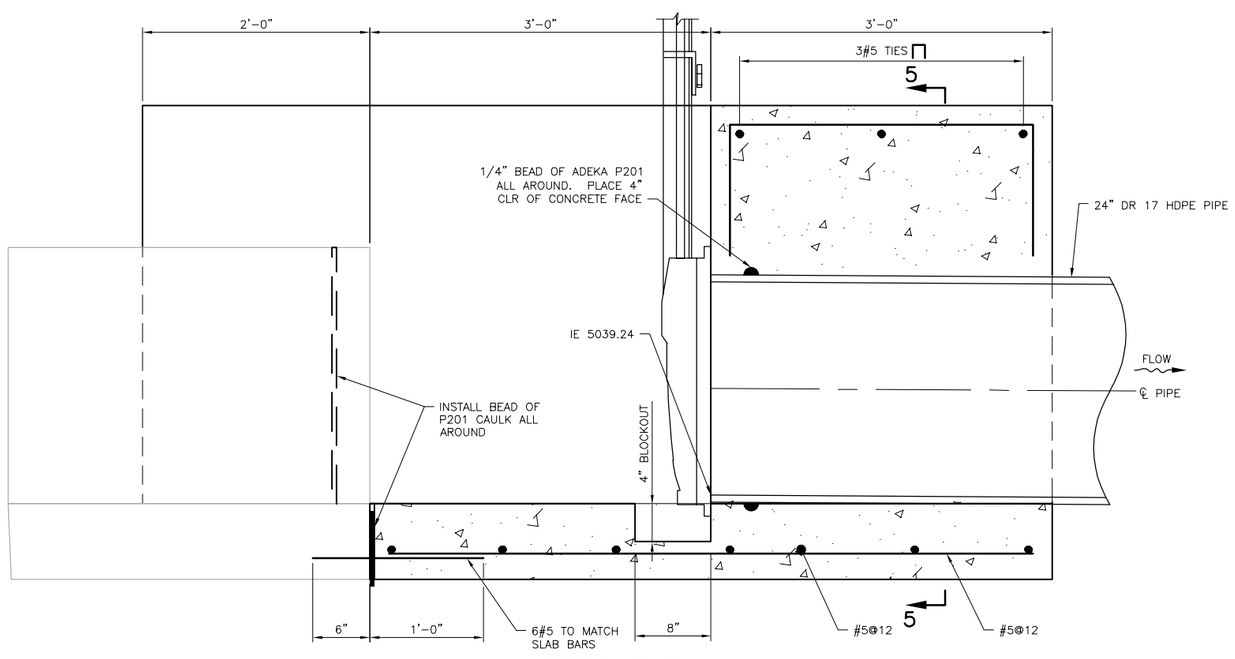

SECTION B–B
SCALE: 1 1/2"=1'-0"

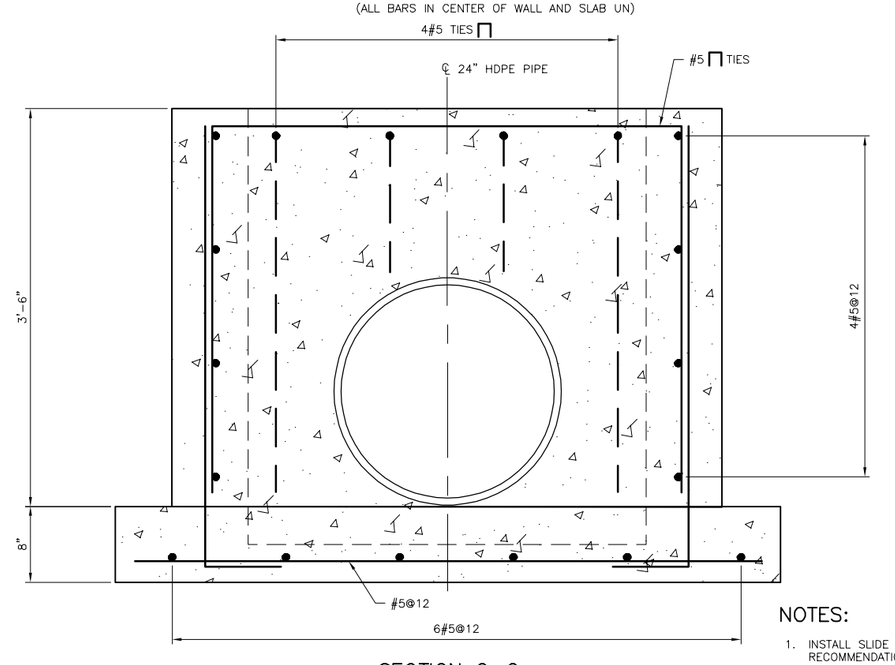

SECTION C–C
SCALE: 1 1/2"=1'-0"

NOTES:

1. INSTALL SLIDE GATES PER MANUFACTURER'S RECOMMENDATIONS.
2. GROUT 1" SPACE BETWEEN THE SEAT AND CONCRETE USING 5,000 PSI NON–SHRINK GROUT AFTER THE GATE HAS BEEN MOUNTED ON THE ANCHOR BOLTS.

REV	DATE	DESCRIPTION	APPRVD BY
	9/14/22	ISSUED FOR BID – NOT FOR CONSTRUCTION	JLB

REVISIONS

0 1/2 1 2
2" AT FULL SIZE
SCALE ACCORDINGLY

CONSULTANTS:
ERC
225 Union Blvd, STE 325
Lakewood, CO 80228
PH: 303.679.4820

SMRC Structural Engineers Inc.
215 S. Wadsworth Blvd., Suite 320
Lakewood, CO 80226
303.274.8656
f 303.484.3777

CLIENT:
City of Thornton
9500 Civic Center Drive
Thornton, CO 80229

THORNTON GROUNDWATER RECHARGE PROJECT TRIAL SITE

SECTION 8 POND PARSHALL FLUME
CHANNEL END CAP PLAN AND SECTIONS

SMRC PROJECT NO. ERC–21–51
DESIGN BY: DAB
DRAWN BY: RH
CHECKED BY: DAB
DRAWING NO. S–13
SHEET 34 OF 35

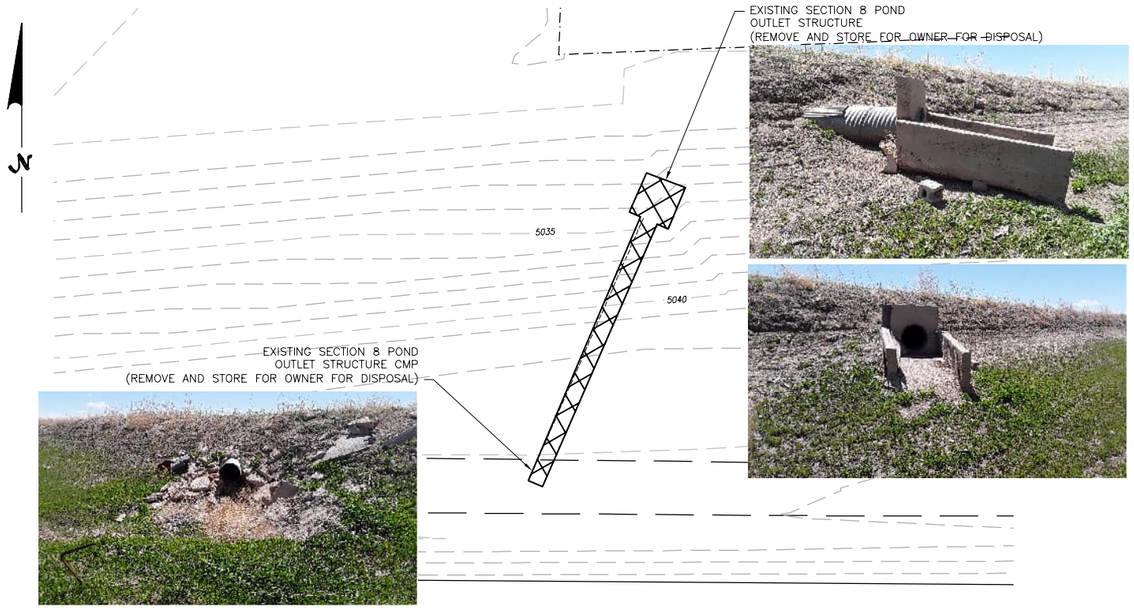

SECTION 8 POND CMP AND OUTLET STRUCTURE DEMOLITON PLAN
SCALE: 1"=10'-0"

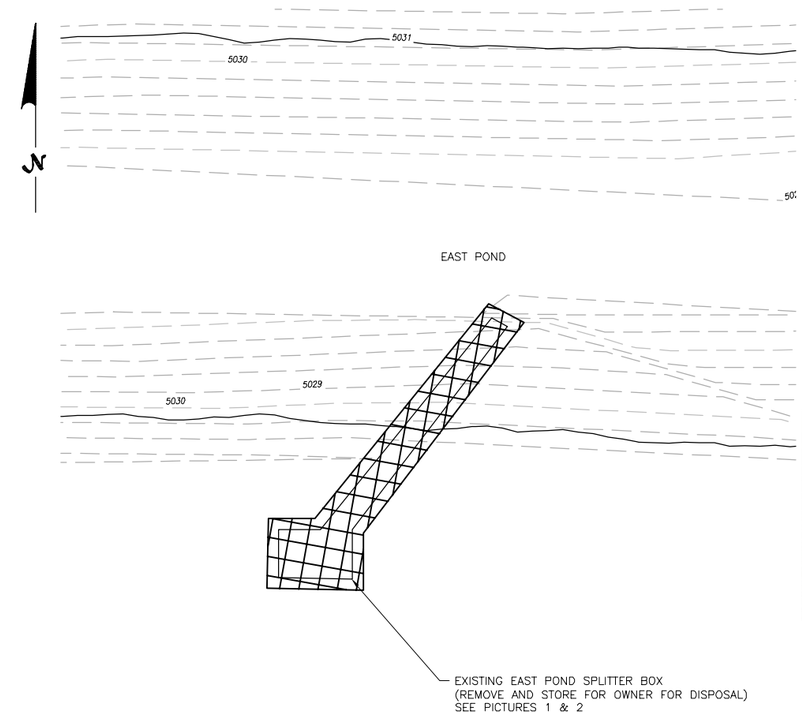

EXISTING EAST POND SPLITTER BOX PICTURE 1

EXISTING EAST POND SPLITTER BOX PICTURE 2

EXISTING EAST POND SPLITTER BOX AND PIPE DEMOLITION PLAN
SCALE: 1"=10'-0"

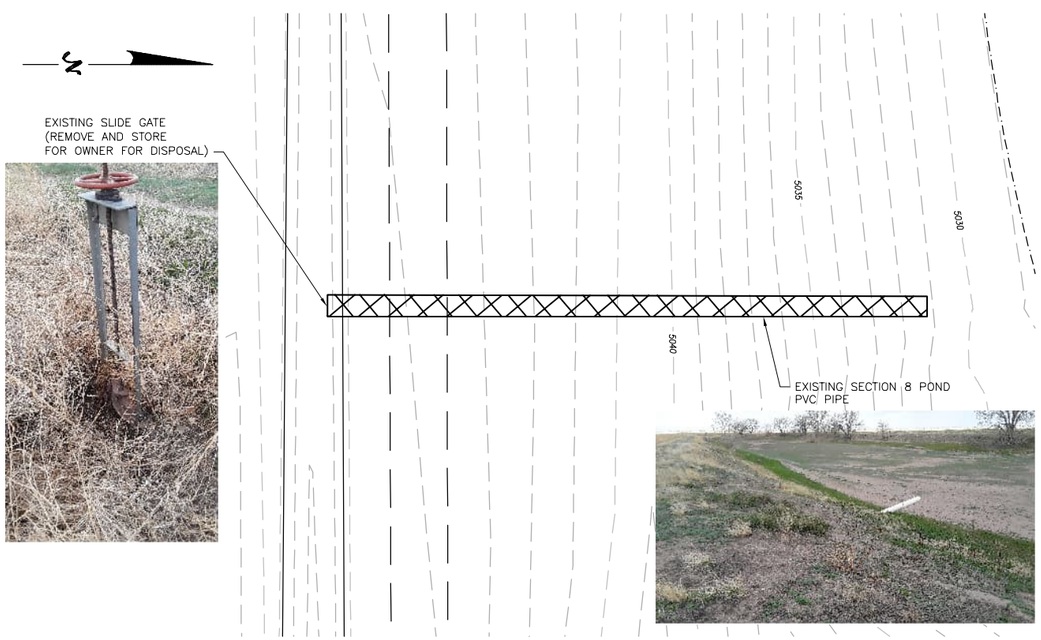

EXISTING SECTION 8 PVC PIPE AND HEADGATE DEMOLITION PLAN
SCALE: 1" = 10'-0"

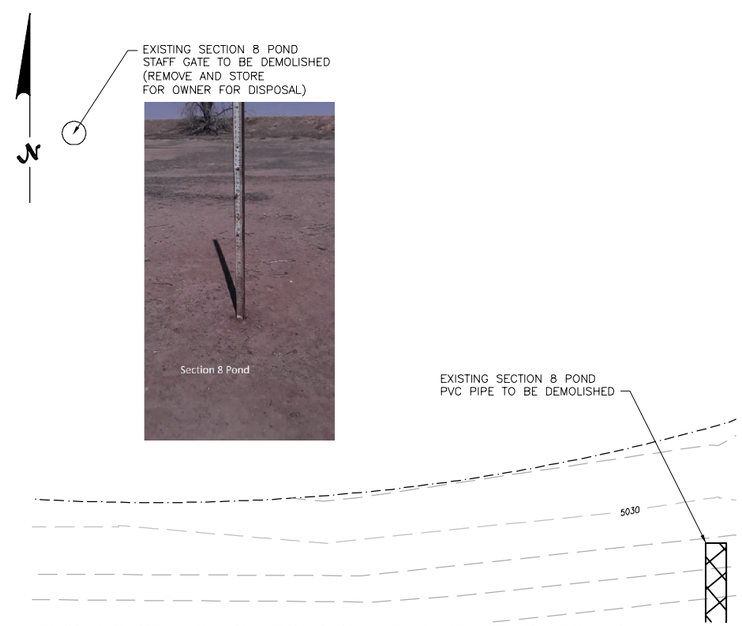

EXISTING SECTION 8 POND STAFF GAGE DEMOLITION PLAN
SCALE: 1" = 10'-0"

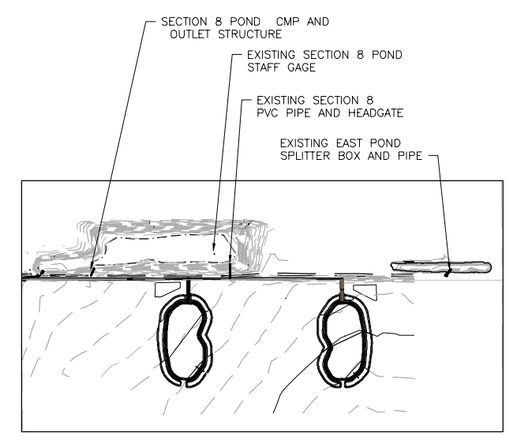

DEMOLITION PLAN KEYMAP
SCALE: N.T.S.

REV	DATE	DESCRIPTION	APPRVD BY
	9/14/22	ISSUED FOR BID – NOT FOR CONSTRUCTION	JLB

REVISIONS

0 1/2 1 2
2" AT FULL SIZE
SCALE ACCORDINGLY

CONSULTANTS:
ERC
225 Union Blvd, STE 325
Lakewood, CO 80228
PH: 303.679.4820

SM&RC
Structural Engineers Inc.
215 S. Wadsworth Blvd.,
Suite 320
Lakewood, CO 80226
303.274.8656
f 303.484.3777

CLIENT:
City of Thornton
9500 Civic Center Drive
Thornton, CO 80229

THORNTON GROUNDWATER RECHARGE PROJECT TRIAL SITE

SECTION 8 POND PARSHALL FLUME AND INTAKE IMPROVEMENT PLAN

SMRC PROJECT NO. ERC-21-51
DESIGN BY: DAB
DRAWN BY: RH
CHECKED BY: DAB

DRAWING NO. S-14

SHEET: 35 OF 35